RoHS compliant

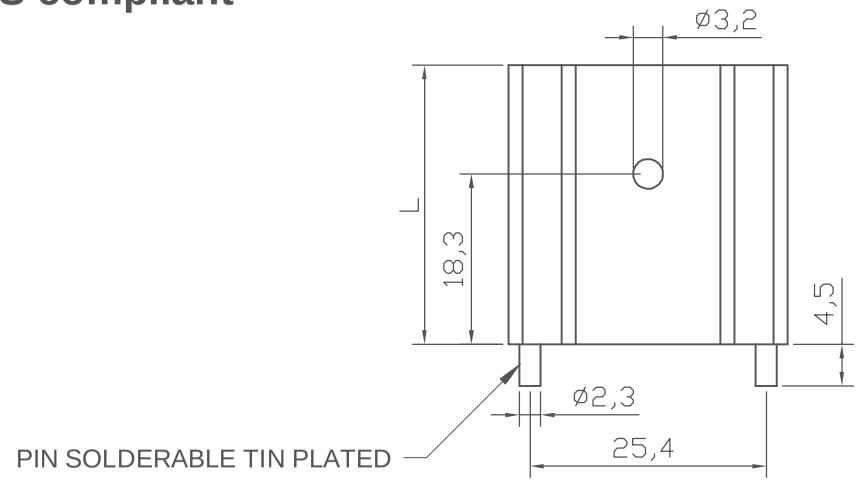

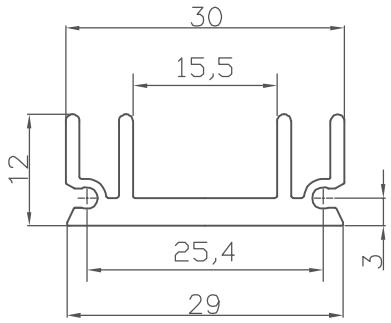

Material:ALUMINUM 6063 T5
Finisher: Black anodize

P/N	L	Thermal resistance(K/W)
V6560W	25MM	10
V6560X	37.5MM	8
V6560Y	50MM	7
V6560W3	20MM	
V6560X2	35MM	
V6560W5	21MM	

Scale	1:1					Date	Name	Customer-No.
TOLERANCE					Drawn	17.11.2005	Storb	
X.					Approved	10.03.2010	Andy	ASSMANN WSW-No. V6560x
X.X								
X.XX		?	Modify drawing layout	10.03.2010	Alex			
DIM	TOL	?	Update	11.08.2009	Dean			Drawing-No. ASS 0595 HS rev03
X.°		?	Drawn	17.11.2005	Storb			
								Replace / Sheet
Angle	TOL	Id.	Modification	Date	Name			

ASSMANN WSW components