Ring Varistors

For micro-motors

VAR-18 series

Type: **VAR-18-P (Plane surface electrode type)**
VAR-18-S (Side surface electrode type)

Issue date: December 2010

- All specifications are subject to change without notice.
- Conformity to RoHS Directive: This means that, in conformity with EU Directive 2002/95/EC, lead, cadmium, mercury, hexavalent chromium, and specific bromine-based flame retardants, PBB and PBDE, have not been used, except for exempted applications.

TDK

Varistors($SrTiO_3$)
For Micro-motors

Conformity to RoHS Directive

VAR-18 Series

Ring varistors are used in a wide range of applications from micro motor noise absorption to the protection of circuit contacts.
TDK has greatly improved the electrical and physical performances of these varistors to meet the latest demands. This varistor line covers the traditional shapes and dimensions as well as the more varied and specialized applications.

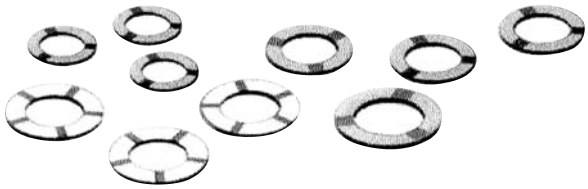

FEATURES

ELECTRICAL PERFORMANCES

- The temperature characteristics of the varistor voltage (E_{10} value) are positive. This prevents the varistor voltage from decreasing at high temperatures and from large currents flowing through the varistor. Therefore, these varistors remove design obstacles by eliminating the need for setting the room temperature varistor voltage (E_{10} value) higher—a measure that compromises noise reduction levels.
- Furthermore, the VAR-18 series has also eliminated the problem of the noise level being amplified at low-temperatures and having a negative impact on the life of the motor.
- Because the VAR-18 series has the same large capacitance as the conventional varistors, it has excellent functions to eliminate and control motor noise in high frequency bands.

PHYSICAL PERFORMANCES

- Because copper electrodes are used and the heat resistance of the ceramic elements has been improved, there is no concern for electrode erosion or thermal crack even at the higher soldering temperatures that are used in lead-free soldering.
- The ceramic element has excellent flexure strength as is suitable for automatic motor assembly.

PRODUCT LINEUP

- The varistors in this series come in a wide range of dimensions and so can be accurately used for almost all motors.
- This lineup includes side-surface electrode varistors that can be used with ultra-compact micro motors.

PRODUCT IDENTFICATIONS

VAR-18	□□□	□□□	□	□	□	–	□□□
(1)	(2)	(3)	(4)	(5)	(6)		(7)

(1) Series name
(2) Outer diameter
  080: ø8mm
  107: ø10.7mm
(3) Varistor voltage
  053: 5.3V
  157: 15.7V
(4) Varistor voltage tolerance
  M: ±20%
(5) Number of electrodes
  3, 5, 7
(6) Electrode location
  P: Plane
  S: Side
(7)TDK classification

PERFORMANCES

Operating temperature range	–25 to +85°C
Pulse resistance [DC.60V, ON-OFF: 50 cycles]	$\Delta E_{10}, \Delta\alpha_{10}$±15%
Moisture resistance [60±2°C, 90 to 95(%)RH, 240 hours]	$\Delta E_{10}, \Delta\alpha_{10}$±10%
Soldering heat resistance [320°C, 3 seconds]	$\Delta E_{10}, \Delta\alpha_{10}$±10%
Flexure strength	9.8N min.
Electrode tensile strength	14.7N min.

VARISTOR VOLTAGE TEMPERATURE CHARACTERISTICS

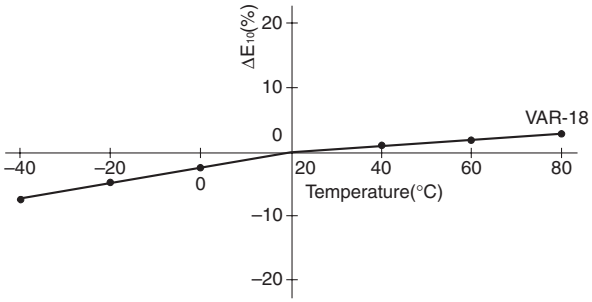

- Conformity to RoHS Directive: This means that, in conformity with EU Directive 2002/95/EC, lead, cadmium, mercury, hexavalent chromium, and specific bromine-based flame retardants, PBB and PBDE, have not been used, except for exempted applications.

• All specifications are subject to change without notice.

SHAPES AND DIMENSIONS

PLANE SURFACE ELECTRODE TYPE(3-ELECTRODE)

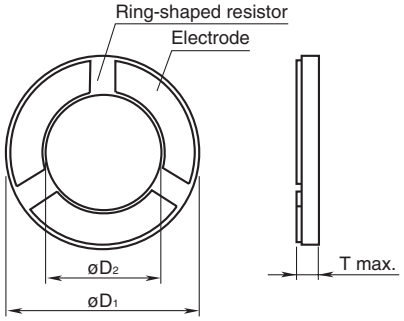

PLANE SURFACE ELECTRODE TYPE(5-ELECTRODE)

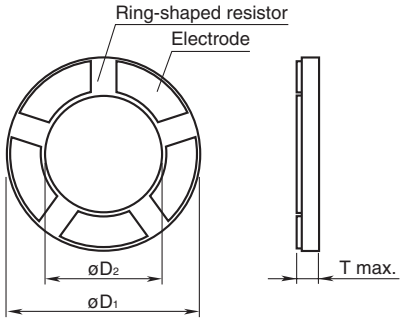

Diameter Symbol	Dimensions(mm)			Number of electrodes
	øD1	øD2	T max.	
024	2.45±0.1	1.78±0.08	0.50	3
030	3.0±0.15	2.0±0.1	0.50	3
030	3.0±0.12	2.15±0.1	0.50	3
042	4.2±0.15	2.8+0.2, –0.1	0.60	3
048	4.8+0.1, –0.2	3.5+0.2, –0.1	0.60	3
060	6.0±0.2	4.0+0.2, –0.1	0.70	3
066	6.6±0.2	4.7±0.15	0.75	3
080	8.0±0.3	5.0±0.2	0.75	3
085	8.5±0.2	5.0±0.2	0.75	3
085	8.5±0.3	5.8±0.15	0.75	3
094	9.4±0.3	5.78±0.15	1.05	3
107	10.7+0.2, –0.35	6.7+0.25, –0.1	1.10	3
120	12.0+0.4, –0.1	7.5±0.2	1.10	3 or 5
160	16.0±0.4	9.4±0.3	1.70	5

SIDE SURFACE ELECTRODE TYPE(3-ELECTRODE)

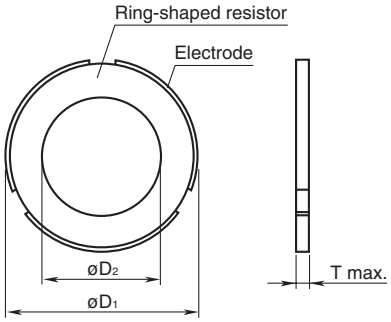

SIDE SURFACE ELECTRODE TYPE(6-ELECTRODE)

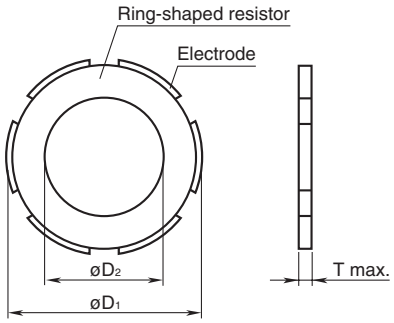

Diameter Symbol	Dimensions(mm)			Number of electrodes
	øD1	øD2	T max.	
042	4.2±0.15	2.85+0.2, –0.1	0.60	3
066	6.6±0.2	4.7±0.15	0.60	3 or 6
076	7.6±0.2	5.0±0.2	0.60	3 or 6
078	7.8±0.2	5.35±0.2	0.65	3
086	8.6±0.2	5.0±0.2	0.75	3

ELECTRICAL CHARACTERISTICS (EXAMPLE: OD ø10.7mm type)

Varistor voltage Tolerance	Nominal varistor voltage E_{10mA} (V)	α_{10}[1 to 10mA]	Rated power (mW)	Varistor voltage temperature coefficient (%/°C) [25 to 50°C]	Capacitance (nF) [at 1kHz]
032Y	2.0 to 4.5	2.3	500	±0.2	1 to 100
053M	4.0 to 6.6	2.3	500	±0.2	1 to 100
077M	5.9 to 9.4	2.3	500	±0.2	1 to 100
115M	9.0 to 14.0	2.3	500	±0.2	1 to 100
157M	13.0 to 18.4	2.3	500	±0.2	1 to 100
218M	17.6 to 26.0	2.3	500	±0.2	1 to 100
240M	19.0 to 29.0	2.3	500	±0.2	1 to 100
320M	26.0 to 38.0	2.3	500	±0.2	1 to 100

• All specifications are subject to change without notice.

Mouser Electronics

Authorized Distributor

Click to View Pricing, Inventory, Delivery & Lifecycle Information:

TDK:

VAR-18094115M3P-XK VAR-18086115M3S-XK VAR-18080115M3P-XK VAR-18085115M3P-YK VAR-18120550M5P-XK VAR-18160550M5P-XK VAR-18107218M3P-XK VAR-18085218M3P-XK VAR-18094218M3P-XK VAR-18085077M3P-YK VAR-18080077M3P-XK VAR-18086077M3S-XK VAR-18042077M3P-XK VAR-18042077M3S-XK VAR-18094077M3P-XK VAR-18107077M3P-XK VAR-18107157M3P-XK VAR-18086157M3S-XK VAR-18094157M3P-XK VAR-18094320M3P-XK VAR-18120320M5P-XK VAR-18160320M5P-XK VAR-18107320M3P-XK VAR-18107115M3P-XK