# Standard Recovery Diodes (Stud Version), 300 A

DO-205AB (DO-9)

## FEATURES

- Wide current range
- High voltage rating up to 2500 V
- High surge current capabilities
- Stud cathode and stud anode version
- High resistance to acceleration
- Designed and qualified for industrial level
- Material categorization: for definitions of compliance please see www.vishay.com/doc?99912

RoHS COMPLIANT

## TYPICAL APPLICATIONS

- Converters
- Power supplies
- Machine tool controls
- High power drives
- Medium traction applications

| PRODUCT SUMMARY | |
|---|---|
| $I_{F(AV)}$ | 300 A |
| Package | DO-205AB (DO-9) |
| Circuit configuration | Single diode |

| MAJOR RATINGS AND CHARACTERISTICS | | | | |
|---|---|---|---|---|
| PARAMETER | TEST CONDITIONS | 301U(R) | | UNITS |
| | | 160 TO 200 | 250 | |
| $I_{F(AV)}$ | | 330 | 300 | A |
| | $T_C$ | 120 | 120 | °C |
| $I_{F(RMS)}$ | | 520 | 470 | A |
| $I_{FSM}$ | 50 Hz | 8250 | 6050 | A |
| | 60 Hz | 8640 | 6335 | |
| $I^2t$ | 50 Hz | 340 | 183 | $kA^2s$ |
| | 60 Hz | 311 | 167 | |
| $V_{RRM}$ | Range | 1600 to 2000 | 2500 | V |
| $T_J$ | | -40 to 180 | -40 to 180 | °C |

## ELECTRICAL SPECIFICATIONS

| VOLTAGE RATINGS | | | | |
|---|---|---|---|---|
| TYPE NUMBER | VOLTAGE CODE | $V_{RRM}$, MAXIMUM REPETITIVE PEAK REVERSE VOLTAGE V | $V_{RSM}$, MAXIMUM NON-REPETITIVE PEAK REVERSE VOLTAGE V | $I_{RRM}$ MAXIMUM AT $T_J = T_J$ MAXIMUM mA |
| VS-301U(R)<br>VS-303U(R)<br>VS-305U(R)<br>VS-307U(R)<br>VS-309U(R) | 160 | 1600 | 1700 | 15 |
| | 200 | 2000 | 2100 | |
| | 250 | 2500 | 2600 | |


For technical questions within your region: DiodesAmericas@vishay.com, DiodesAsia@vishay.com, DiodesEurope@vishay.com
THIS DOCUMENT IS SUBJECT TO CHANGE WITHOUT NOTICE. THE PRODUCTS DESCRIBED HEREIN AND THIS DOCUMENT ARE SUBJECT TO SPECIFIC DISCLAIMERS, SET FORTH AT www.vishay.com/doc?91000

## FORWARD CONDUCTION

| PARAMETER | SYMBOL | TEST CONDITIONS | | | 301U(R) 160 TO 200 | 301U(R) 250 | UNITS |
|---|---|---|---|---|---|---|---|
| Maximum average forward current at case temperature | $I_{F(AV)}$ | 180° conduction, half sine wave | | | 330 | 300 | A |
| | | | | | 120 | 120 | °C |
| Maximum RMS forward current | $I_{F(RMS)}$ | DC at $T_C$ = 115 °C (up to 2000 V), $T_C$ = 102 °C (2500 V) | | | 520 | 470 | A |
| Maximum peak, one cycle forward, non-repetitive surge current | $I_{FSM}$ | t = 10 ms | No voltage reapplied | Sinusoidal half wave, initial $T_J = T_J$ maximum | 8250 | 6050 | A |
| | | t = 8.3 ms | | | 8640 | 6335 | |
| | | t = 10 ms | 100 % $V_{RRM}$ reapplied | | 6940 | 5090 | |
| | | t = 8.3 ms | | | 7270 | 5330 | |
| Maximum $I^2t$ for fusing | $I^2t$ | t = 10 ms | No voltage reapplied | | 340 | 183 | $kA^2s$ |
| | | t = 8.3 ms | | | 311 | 167 | |
| | | t = 10 ms | 100 % $V_{RRM}$ reapplied | | 241 | 129 | |
| | | t = 8.3 ms | | | 220 | 118 | |
| Maximum $I^2\sqrt{t}$ for fusing | $I^2\sqrt{t}$ | t = 0.1 to 10 ms, no voltage reapplied | | | 3400 | 1830 | $kA^2\sqrt{s}$ |
| Low level value of threshold voltage | $V_{F(TO)1}$ | (16.7 % x π x $I_{F(AV)}$ < I < π x $I_{F(AV)}$), $T_J = T_J$ maximum | | | 0.77 | 0.90 | V |
| High level value of threshold voltage | $V_{F(TO)2}$ | (I > π x $I_{F(AV)}$), $T_J = T_J$ maximum | | | 0.84 | 0.97 | |
| Low level value of forward slope resistance | $r_{f1}$ | (16.7 % x π x $I_{F(AV)}$ < I < π x $I_{F(AV)}$), $T_J = T_J$ maximum | | | 0.49 | 0.59 | mΩ |
| High level value of forward slope resistance | $r_{f2}$ | (I > π x $I_{F(AV)}$), $T_J = T_J$ maximum | | | 0.49 | 0.55 | |
| Maximum forward voltage drop | $V_{FM}$ | $I_{pk}$ = 942 A, $T_J = T_J$ maximum, $t_p$ = 10 ms sinusoidal wave | | | 1.22 | 1.46 | V |

## SPECIAL SELECTION FORWARD VOLTAGE ($T_j$ = 25 °C)

| DEVICE CLASSIFICATION | BAND | MIN. | MAX. | UNIT | TEST CONDITIONS |
|---|---|---|---|---|---|
| VS-305U250P4<br>VS-307UA250P4<br>VS-305UR250P4<br>VS-307URA250P4 | P4 | 1.31 | 1.40 | V | 1000 $A_{pk}$ |

## THERMAL AND MECHANICAL SPECIFICATIONS

| PARAMETER | | SYMBOL | TEST CONDITIONS | VALUES | UNITS |
|---|---|---|---|---|---|
| Maximum junction operating temperature range | | $T_J$ | | -40 to 180 | °C |
| Maximum storage temperature range | | $T_{Stg}$ | | -40 to 200 | |
| Maximum thermal resistance, junction to case | | $R_{thJC}$ | DC operation | 0.14 | K/W |
| Maximum thermal resistance, case to heatsink | | $R_{thCS}$ | Mounting surface, smooth, flat and greased | 0.08 | |
| Maximum allowed mounting torque +0 -20 % | | | Not lubricated threads | 37 | N · m |
| | | | Lubricated threads | 28 | |
| Weight | 301U | | | 250 ± 5 | g |
| | 303U | | | 152 ± 5 | |
| | 305U | | | 177 ± 5 | |
| | 307U | | | 197 ± 5 | |
| | 309U | | | 160 ± 5 | |
| Case style | | | See dimensions - link at the end of datasheet | DO-205AB (DO-9) | |


For technical questions within your region: DiodesAmericas@vishay.com, DiodesAsia@vishay.com, DiodesEurope@vishay.com
THIS DOCUMENT IS SUBJECT TO CHANGE WITHOUT NOTICE. THE PRODUCTS DESCRIBED HEREIN AND THIS DOCUMENT ARE SUBJECT TO SPECIFIC DISCLAIMERS, SET FORTH AT www.vishay.com/doc?91000

| $\Delta R_{thJC}$ CONDUCTION | | | | | | |
|---|---|---|---|---|---|---|
| CONDUCTION ANGLE | SINUSOIDAL CONDUCTION | | RECTANGULAR CONDUCTION | | TEST CONDITIONS | UNITS |
| | 80 TO 200 | 250 | 80 TO 200 | 250 | | |
| 180° | 0.015 | 0.015 | 0.011 | 0.011 | $T_J = T_J$ maximum | K/W |
| 120° | 0.018 | 0.018 | 0.019 | 0.019 | | |
| 90° | 0.023 | 0.023 | 0.025 | 0.025 | | |
| 60° | 0.034 | 0.034 | 0.035 | 0.035 | | |
| 30° | 0.056 | 0.056 | 0.057 | 0.057 | | |

**Note**

- The table above shows the increment of thermal resistance $R_{thJC}$ when devices operate at different conduction angles than DC

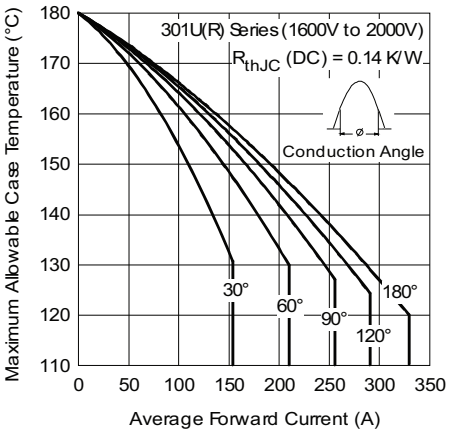


Fig. 1 - Current Ratings Characteristics

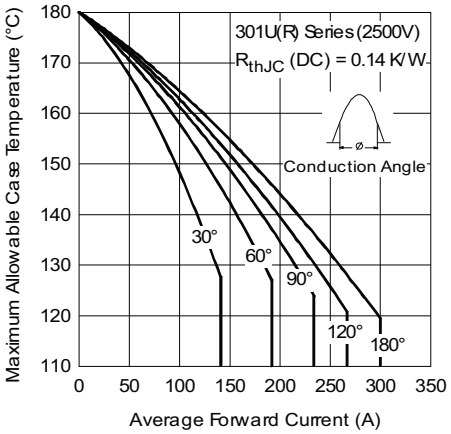


Fig. 2 - Current Ratings Characteristics

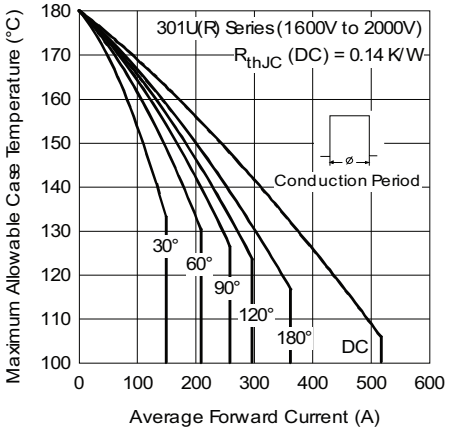


Fig. 1 - Current Ratings Characteristics

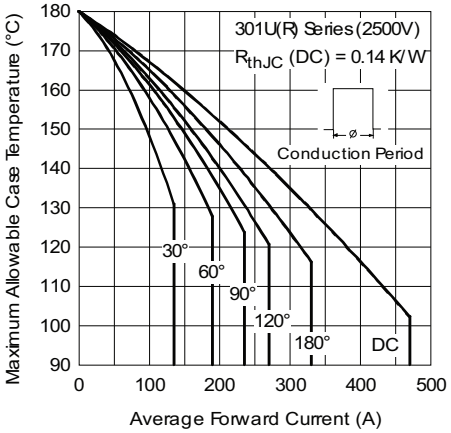


Fig. 3 - Current Ratings Characteristics


For technical questions within your region: DiodesAmericas@vishay.com, DiodesAsia@vishay.com, DiodesEurope@vishay.com
THIS DOCUMENT IS SUBJECT TO CHANGE WITHOUT NOTICE. THE PRODUCTS DESCRIBED HEREIN AND THIS DOCUMENT ARE SUBJECT TO SPECIFIC DISCLAIMERS, SET FORTH AT www.vishay.com/doc?91000

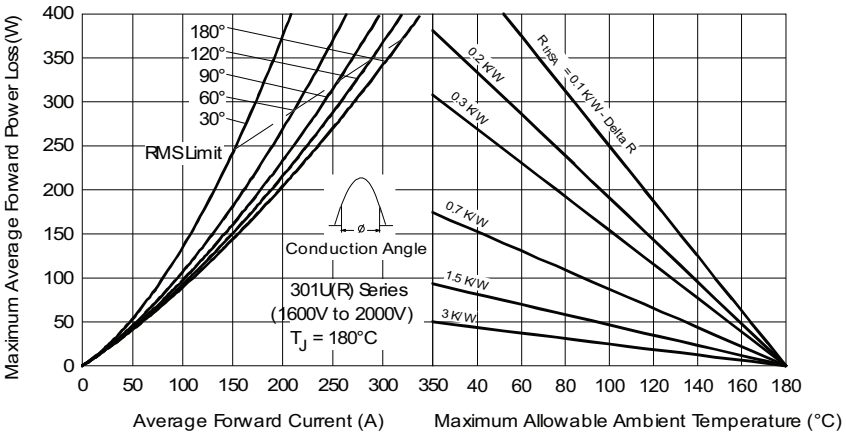


Fig. 4 - Forward Power Loss Characteristics

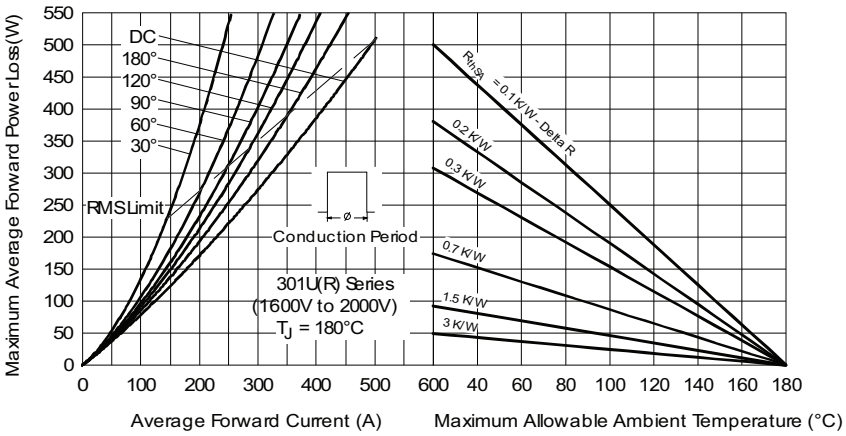


Fig. 5 - Forward Power Loss Characteristics

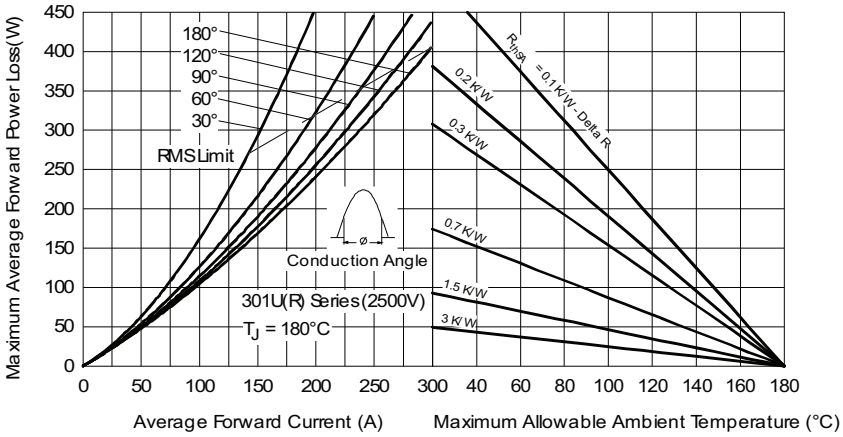


Fig. 6 - Forward Power Loss Characteristics


For technical questions within your region: DiodesAmericas@vishay.com, DiodesAsia@vishay.com, DiodesEurope@vishay.com
THIS DOCUMENT IS SUBJECT TO CHANGE WITHOUT NOTICE. THE PRODUCTS DESCRIBED HEREIN AND THIS DOCUMENT ARE SUBJECT TO SPECIFIC DISCLAIMERS, SET FORTH AT www.vishay.com/doc?91000

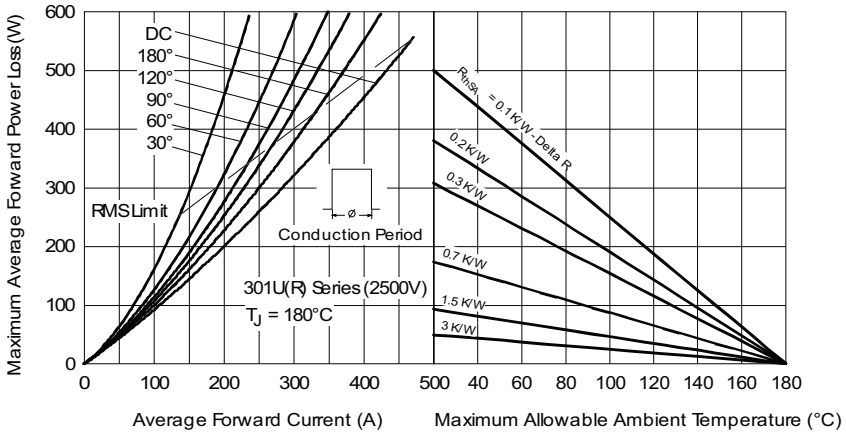


Fig. 7 - Forward Power Loss Characteristics

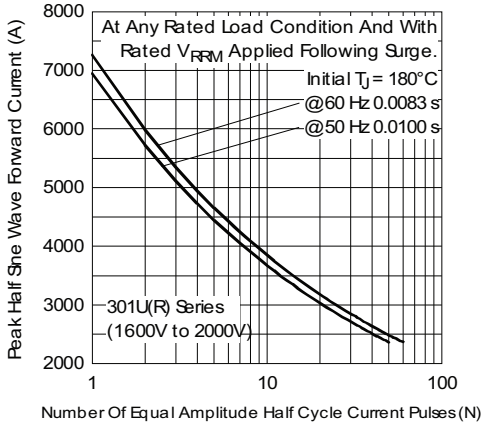


Fig. 8 - Maximum Non-Repetitive Surge Current

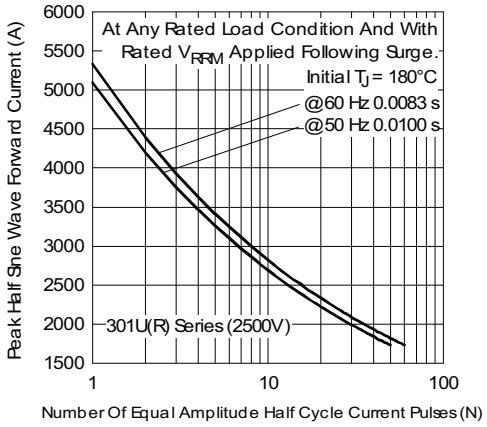


Fig. 10 - Maximum Non-Repetitive Surge Current

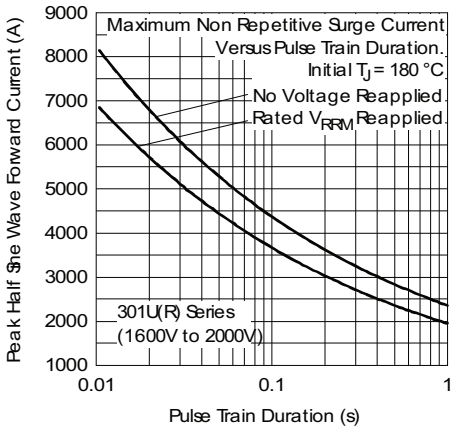


Fig. 9 - Maximum Non-Repetitive Surge Current

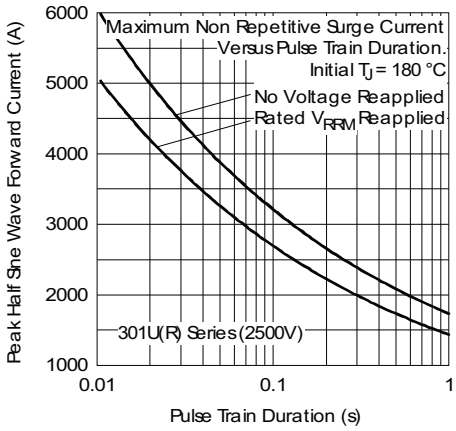


Fig. 11 - Maximum Non-Repetitive Surge Current


For technical questions within your region: DiodesAmericas@vishay.com, DiodesAsia@vishay.com, DiodesEurope@vishay.com
THIS DOCUMENT IS SUBJECT TO CHANGE WITHOUT NOTICE. THE PRODUCTS DESCRIBED HEREIN AND THIS DOCUMENT ARE SUBJECT TO SPECIFIC DISCLAIMERS, SET FORTH AT www.vishay.com/doc?91000

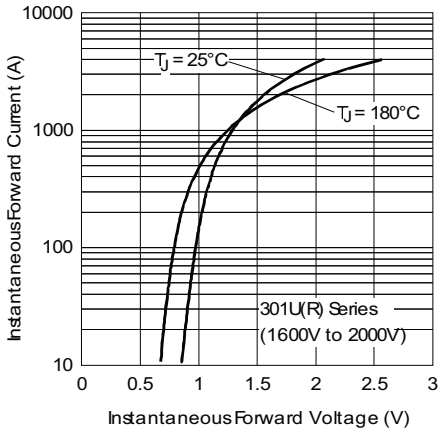


Fig. 12 - Forward Voltage Drop Characteristics

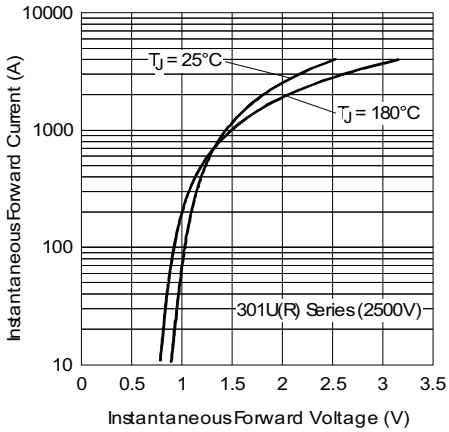


Fig. 13 - Forward Voltage Drop Characteristics

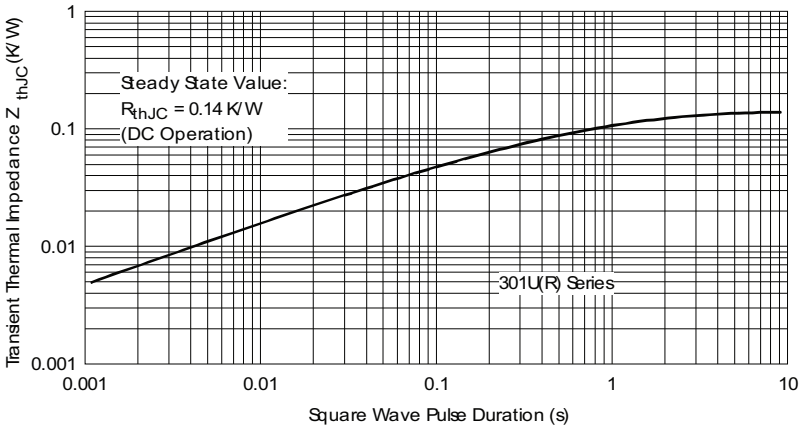


Fig. 14 - Thermal Impedance $Z_{thJC}$ Characteristic


For technical questions within your region: DiodesAmericas@vishay.com, DiodesAsia@vishay.com, DiodesEurope@vishay.com
THIS DOCUMENT IS SUBJECT TO CHANGE WITHOUT NOTICE. THE PRODUCTS DESCRIBED HEREIN AND THIS DOCUMENT ARE SUBJECT TO SPECIFIC DISCLAIMERS, SET FORTH AT www.vishay.com/doc?91000

## ORDERING INFORMATION TABLE

| Device code | VS- | 30 | 1 | U | A | 250 | P4 |
|---|---|---|---|---|---|---|---|
| | 1 | 2 | 3 | 4 | 5 | 6 | 7 |

1 - Vishay Semiconductors product

2 - 30 = essential part number

3 -
- 1 = standard device
- 3 = top threaded version
- 5 = type for rotating application with top threaded version 3/8 16UNC-2A
- 7 = type for rotating application with flexible lead
- 9 = type for rotating application with top threaded version 3/8 24UNF

4 -
- U = stud normal polarity (cathode to stud)
- UR = stud reverse polarity (anode to stud)

5 - A = maximum leakage selection $I_{RRM}$ = 2 mA, $T_J$ = 25 °C

6 - Voltage code x 10 = $V_{RRM}$ (see Voltage Ratings table)

7 - Refer special selection table for applicable parts

| LINKS TO RELATED DOCUMENTS | |
|---|---|
| Dimensions | www.vishay.com/doc?95337 |


For technical questions within your region: DiodesAmericas@vishay.com, DiodesAsia@vishay.com, DiodesEurope@vishay.com
THIS DOCUMENT IS SUBJECT TO CHANGE WITHOUT NOTICE. THE PRODUCTS DESCRIBED HEREIN AND THIS DOCUMENT ARE SUBJECT TO SPECIFIC DISCLAIMERS, SET FORTH AT www.vishay.com/doc?91000

# DO-205AB (DO-9), B-60, B-61, B-41, B-40 for 301U(R), 307U(R), 305U(R) and 309U(R) Series

**DIMENSIONS FOR 301U(R) SERIES - DO-205AB (DO-9)** in millimeters (inches)

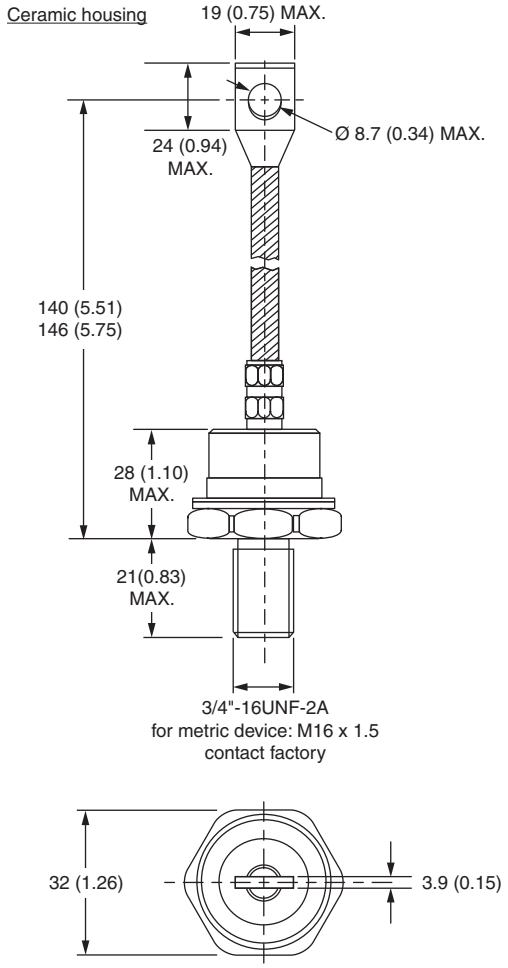

**DIMENSIONS FOR 307U(R) SERIES - B-60** in millimeters (inches)

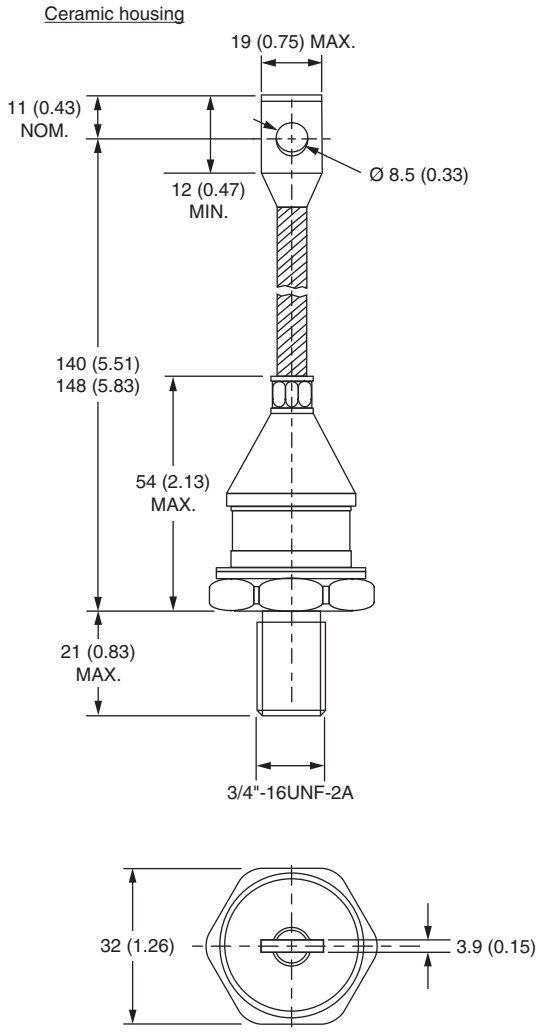

**DIMENSIONS FOR 305U(R) SERIES - B-61** in millimeters (inches)

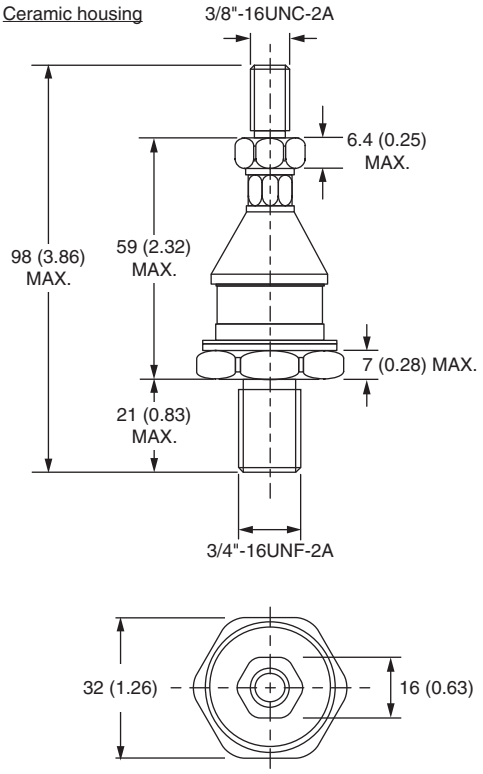


**DIMENSIONS FOR 309U(R) SERIES - B-41** in millimeters (inches)

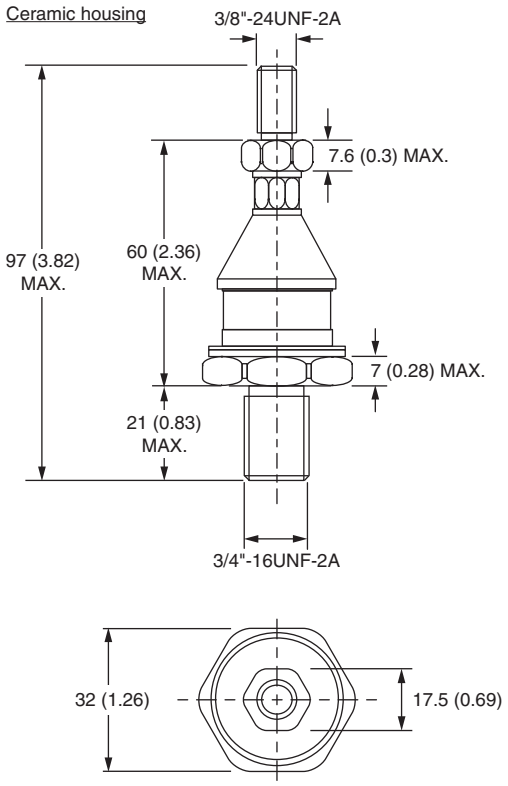

**DIMENSIONS FOR 303U(R) SERIES - B-40** in millimeters (inches)

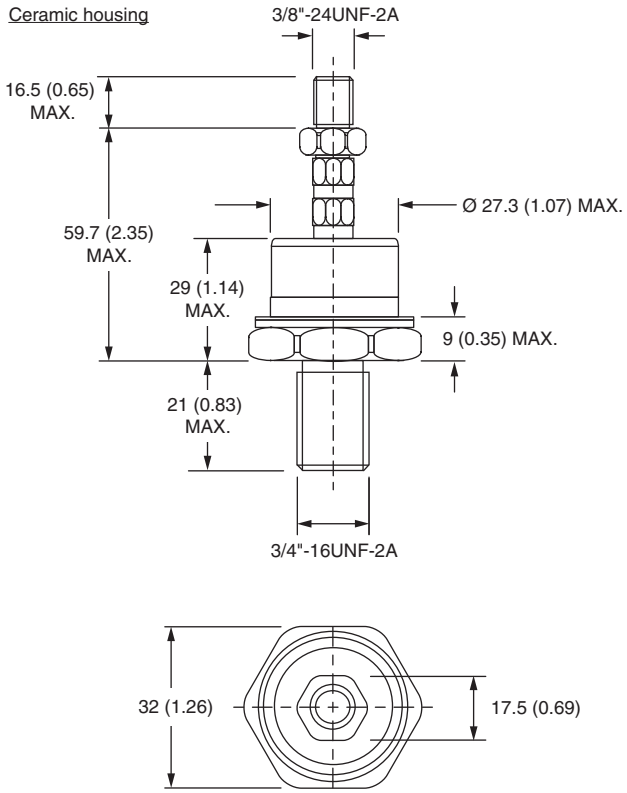

# Disclaimer

ALL PRODUCT, PRODUCT SPECIFICATIONS AND DATA ARE SUBJECT TO CHANGE WITHOUT NOTICE TO IMPROVE RELIABILITY, FUNCTION OR DESIGN OR OTHERWISE.

Vishay Intertechnology, Inc., its affiliates, agents, and employees, and all persons acting on its or their behalf (collectively, "Vishay"), disclaim any and all liability for any errors, inaccuracies or incompleteness contained in any datasheet or in any other disclosure relating to any product.

Vishay makes no warranty, representation or guarantee regarding the suitability of the products for any particular purpose or the continuing production of any product. To the maximum extent permitted by applicable law, Vishay disclaims (i) any and all liability arising out of the application or use of any product, (ii) any and all liability, including without limitation special, consequential or incidental damages, and (iii) any and all implied warranties, including warranties of fitness for particular purpose, non-infringement and merchantability.

Statements regarding the suitability of products for certain types of applications are based on Vishay's knowledge of typical requirements that are often placed on Vishay products in generic applications. Such statements are not binding statements about the suitability of products for a particular application. It is the customer's responsibility to validate that a particular product with the properties described in the product specification is suitable for use in a particular application. Parameters provided in datasheets and/or specifications may vary in different applications and performance may vary over time. All operating parameters, including typical parameters, must be validated for each customer application by the customer's technical experts. Product specifications do not expand or otherwise modify Vishay's terms and conditions of purchase, including but not limited to the warranty expressed therein.

Except as expressly indicated in writing, Vishay products are not designed for use in medical, life-saving, or life-sustaining applications or for any other application in which the failure of the Vishay product could result in personal injury or death. Customers using or selling Vishay products not expressly indicated for use in such applications do so at their own risk. Please contact authorized Vishay personnel to obtain written terms and conditions regarding products designed for such applications.

No license, express or implied, by estoppel or otherwise, to any intellectual property rights is granted by this document or by any conduct of Vishay. Product names and markings noted herein may be trademarks of their respective owners.

# Material Category Policy

**Vishay Intertechnology, Inc. hereby certifies that all its products that are identified as RoHS-Compliant fulfill the definitions and restrictions defined under Directive 2011/65/EU of The European Parliament and of the Council of June 8, 2011 on the restriction of the use of certain hazardous substances in electrical and electronic equipment (EEE) - recast, unless otherwise specified as non-compliant.**

**Please note that some Vishay documentation may still make reference to RoHS Directive 2002/95/EC. We confirm that all the products identified as being compliant to Directive 2002/95/EC conform to Directive 2011/65/EU.**

**Vishay Intertechnology, Inc. hereby certifies that all its products that are identified as Halogen-Free follow Halogen-Free requirements as per JEDEC JS709A standards. Please note that some Vishay documentation may still make reference to the IEC 61249-2-21 definition. We confirm that all the products identified as being compliant to IEC 61249-2-21 conform to JEDEC JS709A standards.**

# Mouser Electronics

Authorized Distributor

Click to View Pricing, Inventory, Delivery & Lifecycle Information:

Vishay:
VS-305U250P4