Rotary Backlock Connector (0.5-mm pitch, Dual Contact)
XF2M

High-reliability rotary-lock and Superior Work Efficiency.

- Dual contact reduces the number of parts.
- Applicable FPC thickness of 0.3 mm.
- Halogen Free (See note)

Note: OMRON uses the following standard to determine halogen-free construction: 900 ppm max. for Br, 900 ppm max. for Cl, and 1,500 ppm max. for Br+Cl.

- RoHS Compliant.

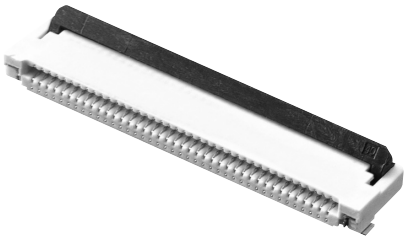

Ordering Information

Pins	Model	Quantity per reel (See Note 2)
6	**XF2M-0615-1A**	1,500
8	**XF2M-0815-1A**	
10	**XF2M-1015-1A**	
12	**XF2M-1215-1A**	
14	**XF2M-1415-1A**	
18	**XF2M-1815-1A**	
20	**XF2M-2015-1A**	
22	**XF2M-2215-1A**	
24	**XF2M-2415-1A**	
26	**XF2M-2615-1A**	
30	**XF2M-3015-1A**	
32	**XF2M-3215-1A**	

Pins	Model	Quantity per reel (See Note 2)
33	**XF2M-3315-1A**	1,500
34	**XF2M-3415-1A**	
35	**XF2M-3515-1A**	
36	**XF2M-3615-1A**	
38	**XF2M-3815-1A**	
40	**XF2M-4015-1A**	
42	**XF2M-4215-1A**	
45	**XF2M-4515-1A**	
50	**XF2M-5015-1A**	
55	**XF2M-5515-1AH**	
60	**XF2M-6015-1AH**	

Note: 1. The end of the model number indicates the slider specification. None: Standard type H: For pin count ≥ 55

2. Please order by integer multiple of the quantity per reel. Add "-R100" at the end of the part to obtain reels of 100 pieces.

Ratings and Specifications

■ Characteristics

Rated current	0.5A AC/DC
Rated voltage	50V AC/DC
Contact resistance	50 mΩ max. (at 20 mV max., 100 mA max.)
Insulation resistance	100 MΩ min. (at 250 VDC)
Withstand voltage	250 VAC for 1 min. (leakage current: 1 mA max.)
Insertion tolerance	20 times
Ambient operating temperature	-30 to +85°C (with no icing or condensation)

■ Materials and Finish

Housing	LCP resin (UL94V-0)/natural
Slider	LCP resin (UL94V-0)/black
Contacts	Spring copper alloy/nickel substrate (2 μm), Gold-plated contacts (0.15 μm)
Hold-down	Spring copper alloy/fused-tin plating (1.5μm)

Dimensions

Unit: mm

XF2M-□□15-1A

XF2M-□□15-1AH

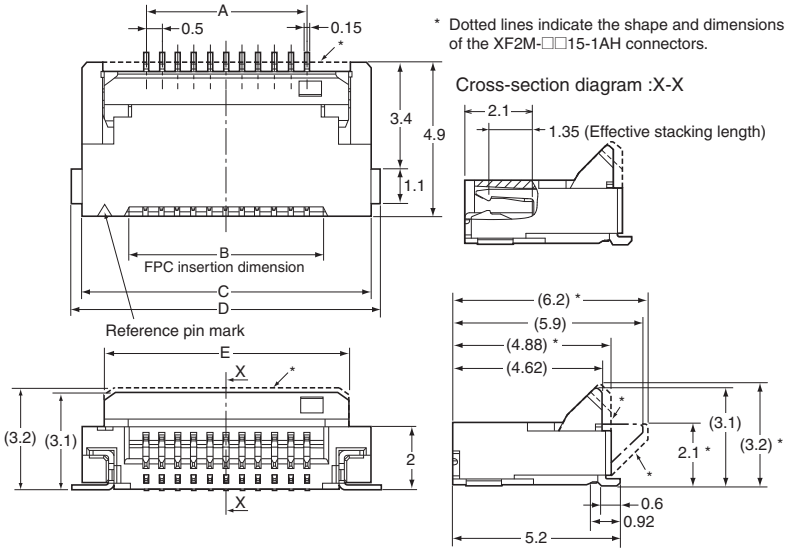

PCB Mating Dimensions (TOP VIEW)

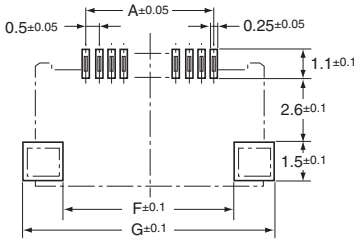

Applicable FPC Dimensions

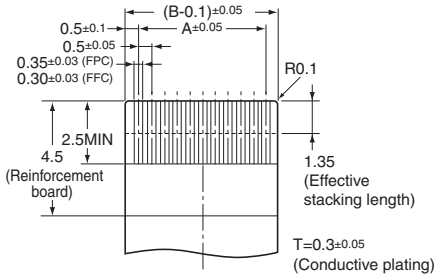

Table of Dimensions

Pins	Model	A	B	C	D	E	F	G
6	**XF2M-0615-1A**	2.5	3.6	6.5	7.1	5.1	4.1	7.5
8	**XF2M-0815-1A**	3.5	4.6	7.5	8.1	6.1	5.1	8.5
10	**XF2M-1015-1A**	4.5	5.6	8.5	9.1	7.1	6.1	9.5
12	**XF2M-1215-1A**	5.5	6.6	9.5	10.1	8.1	7.1	10.5
14	**XF2M-1415-1A**	6.5	7.6	10.5	11.1	9.1	8.1	11.5
18	**XF2M-1815-1A**	8.5	9.6	12.5	13.1	11.1	10.1	13.5
20	**XF2M-2015-1A**	9.5	10.6	13.5	14.1	12.1	11.1	14.5
22	**XF2M-2215-1A**	10.5	11.6	14.5	15.1	13.1	12.1	15.5
24	**XF2M-2415-1A**	11.5	12.6	15.5	16.1	14.1	13.1	16.5
26	**XF2M-2615-1A**	12.5	13.6	16.5	17.1	15.1	14.1	17.5
30	**XF2M-3015-1A**	14.5	15.6	18.5	19.1	17.1	16.1	19.5
32	**XF2M-3215-1A**	15.5	16.6	19.5	20.1	18.1	17.1	20.5
33	**XF2M-3315-1A**	16.0	17.1	20.0	20.6	18.6	17.6	21.0
34	**XF2M-3415-1A**	16.5	17.6	20.5	21.1	19.1	18.1	21.5
35	**XF2M-3515-1A**	17.0	18.1	21.0	21.6	19.6	18.6	22.0
36	**XF2M-3615-1A**	17.5	18.6	21.5	22.1	20.1	19.1	22.5
38	**XF2M-3815-1A**	18.5	19.6	22.5	23.1	21.1	20.1	23.5
40	**XF2M-4015-1A**	19.5	20.6	23.5	24.1	22.1	21.1	24.5
42	**XF2M-4215-1A**	20.5	21.6	24.5	25.1	23.1	22.1	25.5
45	**XF2M-4515-1A**	22.0	23.1	26.0	26.6	24.6	23.6	27.0
50	**XF2M-5015-1A**	24.5	25.6	28.5	29.1	27.1	26.1	29.5
55	**XF2M-5515-1AH**	27.0	28.1	31.0	31.6	29.6	28.6	32.0
60	**XF2M-6015-1AH**	29.5	30.6	33.5	34.1	32.1	31.1	34.5

MEMO

All sales are subject to Omron Electronic Components LLC standard terms and conditions of sale, which can be found at http://www.components.omron.com/components/web/webfiles.nsf/sales_terms.html

ALL DIMENSIONS SHOWN ARE IN MILLIMETERS.
To convert millimeters into inches, multiply by 0.03937. To convert grams into ounces, multiply by 0.03527.

OMRON®

OMRON ELECTRONIC COMPONENTS LLC
55 E. Commerce Drive, Suite B
Schaumburg, IL 60173
847-882-2288

OMRON ON-LINE
Global - http://www.omron.com
USA - http://www.components.omron.com

Cat. No. X304-E-1a 01/13 Specifications subject to change without notice Printed in USA

Mouser Electronics

Authorized Distributor

Click to View Pricing, Inventory, Delivery & Lifecycle Information:

Omron:

XF2M-0615-1A XF2M-0815-1A