THESE DRAWINGS ARE THE PROPERTY OF QUALTEK ELECTRONICS AND NOT TO BE REPRODUCED FOR OR COMMUNICATED TO A THIRD PARTY WITHOUT THE EXPRESS WRITTEN PERMISSION OF AN OFFICER OF QUALTEK ELECTRONICS.

REVISION

| REV. | DESCRIPTION | DATE | APPROVED |
|---|---|---|---|
| A | Changed Pin Out | 03-12-07 | DP |
| B | Updated Specifications | 02-09-12 | LY |
| | | | |

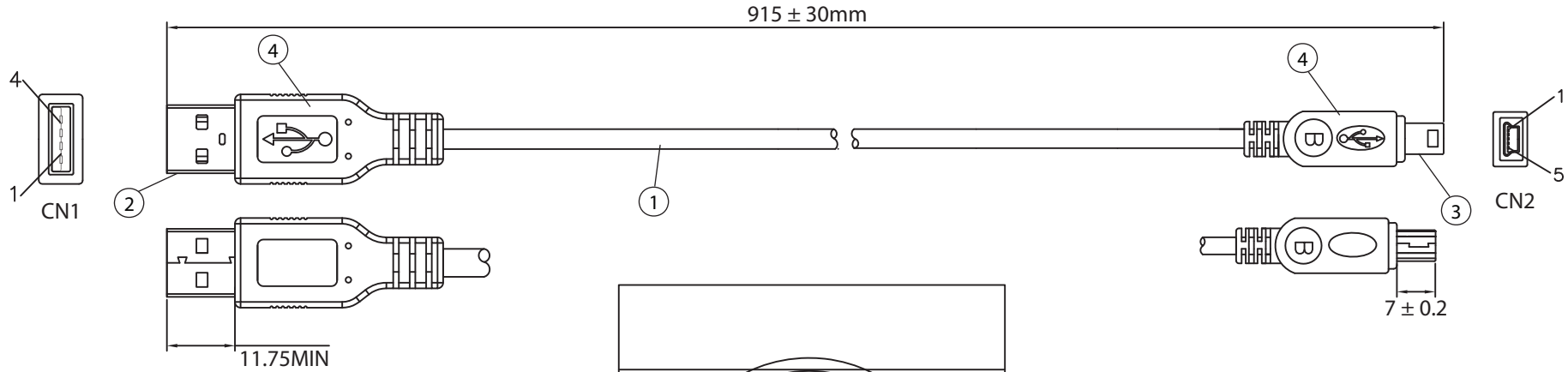


P/N: 3021003-03
USB 4P(A)/M-USB MINI 5P(B)/M
Length:3FT
Color:Black

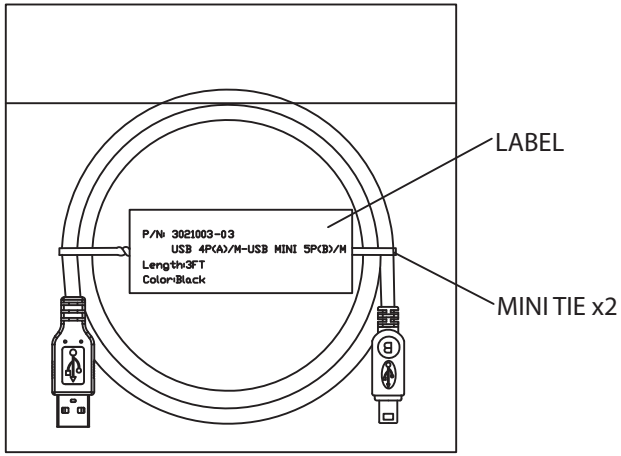


CONNECTION

| CN1 | | CN2 |
|---|---|---|
| 1 | RED | 1 |
| 2 | WHITE | 2 |
| 3 | GREEN | 3 |
| 4 | BLACK | 5 |
| SHELL | BRAID&DRAIN | SHELL |

NOTES:

1. CABLE: UL2725 28/28AWG
   28AWGx1P+28AWGx2C+ AEB(AL) 65%
   OUTER JACKET: BLACK, OD: 4.0 ± 0.2mm
2. CONNECTOR: USB A TYPE MALE
   INSULATOR: WHITE PBT
   PIN G/F
   NICKEL PLATED SHELL
3. CONNECTOR: MINI USB (B) 5P/M TYPE MALE
   INSULATOR: BLACK PBT
   PIN G/F
   NICKEL PLATED SHELL
4. PVC MOLDED: COLOR V398 45P BLACK
5. ELECTRICAL TEST:
   <1>.100% OPEN SHORT & MISS WIRE TEST
   <2>.INSULATION RESISTANCE: DC400V 10M ohm MIN.
   <3>.CONDUCTOR RESISTANCE: 3 ohm MAX.
6. PACKING: 1PC/POLYBAG W/ LABEL

**CONTROLLED**

| Dim range (mm) | Tolerance +/- (mm) |
|---|---|
| 0-1 | 0.15 |
| 1-6 | 0.20 |
| 6-18 | 0.30 |
| 18-50 | 0.50 |
| 50-120 | 0.70 |
| 120-250 | 0.90 |
| 250-500 | 1.20 |

Qualtek Electronics Corp.
WCI DIVISION

Part Number: 3021003-03 RoHS Compliant

Description: USB 4P(A)/M - USB MINI 5P(B)/M

| | UNIT: mm | REV. B |
|---|---|---|
| Drawn / Date | Checked / Date | Approved / Date |
| B. Grubb 01-26-07 | 01-26-07 | JJH / 01-26-07 |

# AMEYA360
Components Supply Platform

## Authorized Distribution Brand :

## Website :

Welcome to visit www.ameya360.com

## Contact Us :


- **Address :**

  401 Building No.5, JiuGe Business Center, Lane 2301, Yishan Rd
  Minhang District, Shanghai , China

- **Sales :**

  Direct +86 (21) 6401-6692

  Email amall@ameya360.com

  QQ 800077892

  Skype ameyasales1 ameyasales2

- **Customer Service :**

  Email service@ameya360.com

- **Partnership :**

  Tel +86 (21) 64016692-8333

  Email mkt@ameya360.com