THIS COPY IS PROVIDED ON A RESTRICTED BASIS AND IS NOT TO BE USED IN ANY WAY DETRIMENTAL TO THE INTERESTS OF PANDUIT CORP.

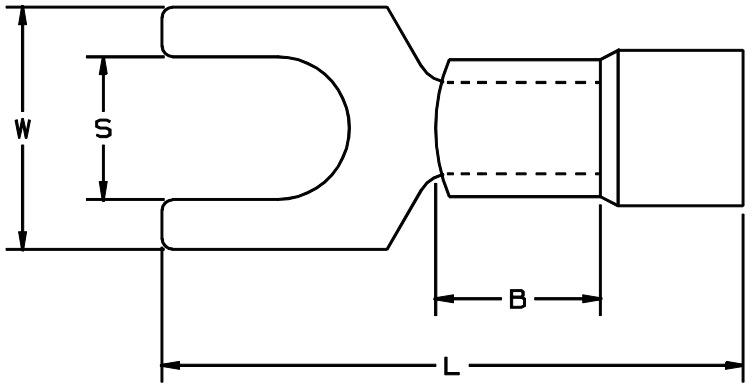

(BEFORE SHRINKING)

NOTES :

1. UL LISTED AND CSA CERTIFIED AFTER HEAT SHRINKING FOR:
   A. 600 V MAX. VOLTAGE RATING
   B. 257°F (125°C) MAX. TEMP. RATING
   C. STRANDED COPPER WIRE ONLY (SEE CHART FOR WIRE RANGE)
2. MATERIAL :
   A. TERMINAL - TIN PLATED COPPER WITH BRAZED SEAM
   B. INSULATOR - HEAT SHRINKABLE POLYOLEFIN WITH HOT MELT SEALANT
3. MINIMUM SHRINK TEMPERATURE: 300°F (150°C)
4. ALL DIMENSIONS SHOWN ARE NOMINAL.
   DIMENSIONS IN BRACKETS ARE IN MILLIMETERS.
5. INSTALLATION TOOL: CT-310

LISTED
587H
E52164

CERTIFIED
73971

PANDUIT PART NUMBER	WIRE RANGE (AWG)	STUD SIZE S	DIMENSIONS			MAX WIRE INSULATION DIA	INSULATION COLOR	STD PKG QTY	BULK PKG QTY
			B	W	L				
PH18-6F	22-18	#6	.250 (6.35)	.32 (8.13)	1.04 (26.42)	.170 (4.32)	RED	25	500
PH18-8F	22-18	#8	.250 (6.35)	.32 (8.13)	1.04 (26.42)	.170 (4.32)	RED	25	500
PH18-10F	22-18	#10	.250 (6.35)	.32 (8.13)	1.04 (26.42)	.170 (4.32)	RED	25	500
PH14-6F	16-14	#6	.250 (6.35)	.38 (9.65)	1.07 (27.18)	.190 (4.83)	BLUE	25	500
PH14-8F	16-14	#8	.250 (6.35)	.38 (9.65)	1.07 (27.18)	.190 (4.83)	BLUE	25	500
PH14-10F	16-14	#10	.250 (6.35)	.38 (9.65)	1.07 (27.18)	.190 (4.83)	BLUE	25	500
PH10-8F	12-10	#8	.250 (6.35)	.38 (9.65)	1.20 (30.48)	.240 (6.10)	YELLOW	20	200
PH10-10F	12-10	#10	.250 (6.35)	.38 (9.65)	1.20 (30.48)	.240 (6.10)	YELLOW	20	200

A41455_01

REV	DATE	BY	CHK	DESCRIPTION	QA	CUST	PM	APP
01	1/01	RM		FILESPEC WAS NPC-A41455-00				
00	12/90	DL		RELEASED				

PANDUIT CORP. TINLEY PARK, ILLINOIS

HEAT SHRINK INSULATED FORK TERMINALS

DRAWN BY	CHK'D	SCALE	DRAWING NO.
DRL		NONE	A41455