Number of contacts

9–50

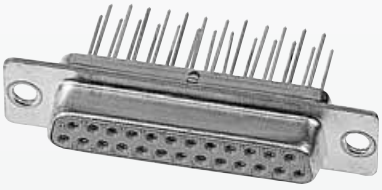

Turned wrap posts 0.6 x 0.6 mm

Identification	No. of contacts	Part No.	
Performance levels Explanations see page 02.26 Other performance levels on request		Performance level 3	Performance level 2
Male connector metal shell with dimples	9	09 67 009 5607	09 67 009 5616[1)]
	15	09 67 015 5607	09 67 015 5616[1)]
	25	09 67 025 5607	09 67 025 5616[1)]
	37	09 67 037 5607	09 67 037 5616[1)]
	50	09 67 050 5607	09 67 050 5616[1)]
Female connector metal shell	9	09 67 009 4707	09 67 009 4716[1)]
	15	09 67 015 4707	09 67 015 4716[1)]
	25	09 67 025 4707	09 67 025 4716[1)]
	37	09 67 037 4707	09 67 037 4716[1)]
	50	09 67 050 4707	09 67 050 4716[1)]

Male connector

Female connector

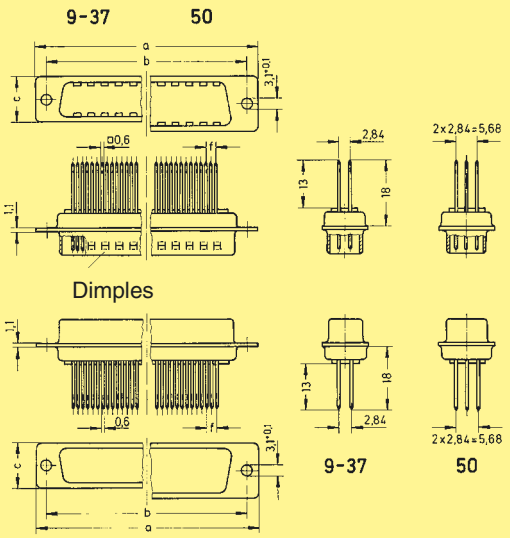

	a	b ±0.1	c	f
9	30.9	25.0	12.5	2.74
15	39.2	33.3	12.5	2.74
25	53.1	47.0	12.5	2.76
37	69.4	63.5	12.5	2.76
50	67.0	61.1	15.4	2.76

Panel cut out for front/rear mount

Values are taken from the CECC 75 301-802

see page 02.24

Dimensions in mm

[1)] Not normally kept in stock

Mating conditions see page 02.26