THIS DRAWING IS UNPUBLISHED. RELEASED FOR PUBLICATION - ,- .
© COPYRIGHT - By - ALL RIGHTS RESERVED.

LOC	DIST
AD	00

REVISIONS

P	LTR	DESCRIPTION	DATE	DWN	APVD
	L2	REVISED PER ECO-11-004587	11MAR11	RK	HMR

1. THE NOTED DIMENSIONS APPLY AT THE INTERSECTION OF THE POST AND HOUSING
2. POINT OF MEASUREMENT FOR PLATING THICKNESS
3. FINISH: POSTS:.000015 GOLD IN CONTACT AREA, .000100-.000200 MATTE TIN-LEAD ON SOLDER TAIL, ALL OVER .000050 NICKEL
4. FINISH: POSTS:.000015 GOLD IN CONTACT AREA, .000100-.000200 MATTE TIN ON SOLDER TAIL, ALL OVER .000050 NICKEL
5. MATERIALS: HOUSING- FLAME RETARDANT THERMOPLASTIC, COLOR-BLACK
   POSTS- PHOS BRONZE
6. OBSOLETE PARTS: OBSOLETE CIS STREAMLINING PER D.RENAUD/D.SINISI

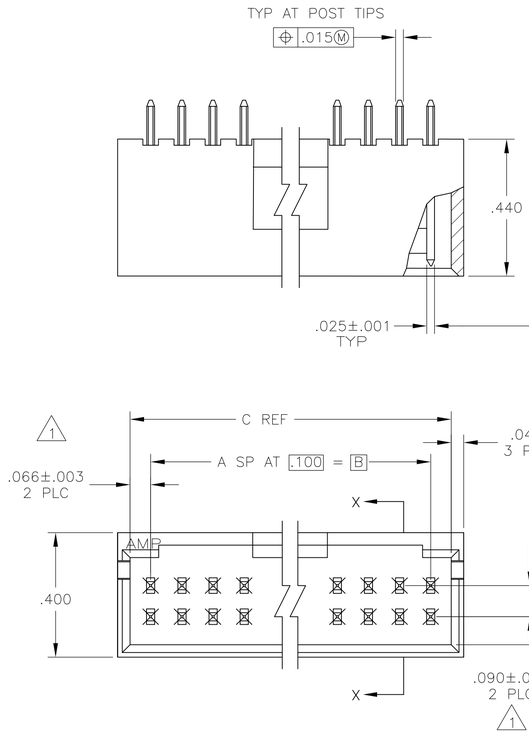

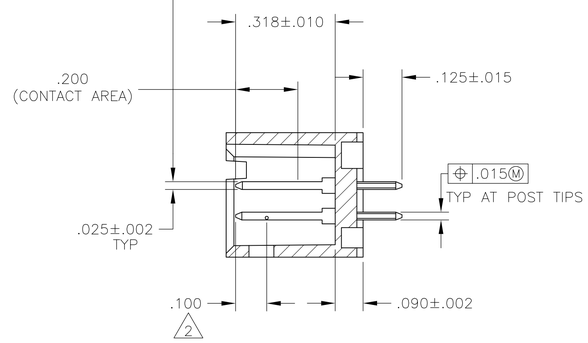

SECT X-X

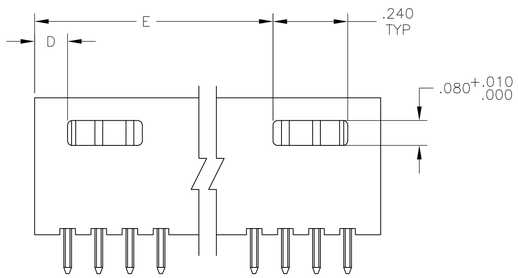

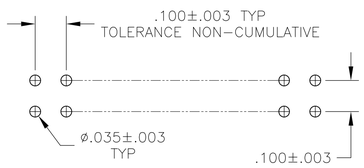

RECOMENDED HOLE LAYOUT

6 OBSOLETE	4	3.506	.106	3.732	3.600	36	74	~~8-102618-5~~
	4	3.406	.106	3.632	3.500	35	72	~~8-102618-4~~
	4	3.306	.106	3.532	3.400	34	70	~~8-102618-3~~
	4	3.206	.106	3.432	3.300	33	68	~~8-102618-2~~
	4	3.106	.106	3.332	3.200	32	66	~~8-102618-1~~
	4	3.006	.106	3.232	3.100	31	64	~~8-102618-0~~
	4	2.906	.106	3.132	3.000	30	62	~~7-102618-9~~
	4	2.806	.106	3.032	2.900	29	60	7-102618-8
6 OBSOLETE	4	2.706	.106	2.932	2.800	28	58	~~7-102618-7~~
	4	2.606	.106	2.832	2.700	27	56	~~7-102618-6~~
	4	2.506	.106	2.732	2.600	26	54	~~7-102618-5~~
	4	2.406	.106	2.632	2.500	25	52	~~7-102618-4~~
	4	2.306	.106	2.532	2.400	24	50	7-102618-3
6 OBSOLETE	4	2.206	.106	2.432	2.300	23	48	~~7-102618-2~~
	4	2.106	.106	2.332	2.200	22	46	~~7-102618-1~~
	4	2.006	.106	2.232	2.100	21	44	~~7-102618-0~~
	4	1.906	.106	2.132	2.000	20	42	6-102618-9
	4	1.806	.106	2.032	1.900	19	40	6-102618-8
6 OBSOLETE	4	1.706	.106	1.932	1.800	18	38	~~6-102618-7~~
	4	1.606	.106	1.832	1.700	17	36	~~6-102618-6~~
	4	1.506	.106	1.732	1.600	16	34	6-102618-5
6 OBSOLETE	4	1.406	.106	1.632	1.500	15	32	~~6-102618-4~~
	4	1.306	.106	1.532	1.400	14	30	6-102618-3
	4	1.206	.106	1.432	1.300	13	28	6-102618-2
	4	1.106	.106	1.332	1.200	12	26	6-102618-1
	4	1.006	.106	1.232	1.100	11	24	6-102618-0
	4	.906	.106	1.132	1.000	10	22	5-102618-9
	4	.806	.106	1.032	.900	9	20	5-102618-8
	4	—	.406	.932	.800	8	18	5-102618-7
	4	—	.306	.832	.700	7	16	5-102618-6
	4	—	.306	.732	.600	6	14	5-102618-5
	4	—	.206	.632	.500	5	12	5-102618-4
	4	—	.206	.532	.400	4	10	5-102618-3
	4	—	.106	.432	.300	3	8	5-102618-2
	4	—	.106	.332	.200	2	6	5-102618-1
6 OBSOLETE	3	3.506	.106	3.732	3.600	36	74	~~3-102618-5~~
	3	3.406	.106	3.632	3.500	35	72	~~3-102618-4~~
	3	3.306	.106	3.532	3.400	34	70	~~3-102618-3~~
	3	3.206	.106	3.432	3.300	33	68	~~3-102618-2~~
	3	3.106	.106	3.332	3.200	32	66	~~3-102618-1~~
	3	3.006	.106	3.232	3.100	31	64	~~3-102618-0~~
	3	2.906	.106	3.132	3.000	30	62	~~2-102618-9~~
	3	2.806	.106	3.032	2.900	29	60	2-102618-8
6 OBSOLETE	3	2.706	.106	2.932	2.800	28	58	~~2-102618-7~~
	3	2.606	.106	2.832	2.700	27	56	~~2-102618-6~~
	3	2.506	.106	2.732	2.600	26	54	~~2-102618-5~~
	3	2.406	.106	2.632	2.500	25	52	~~2-102618-4~~
	3	2.306	.106	2.532	2.400	24	50	2-102618-3
6 OBSOLETE	3	2.206	.106	2.432	2.300	23	48	~~2-102618-2~~
	3	2.106	.106	2.332	2.200	22	46	~~2-102618-1~~
	3	2.006	.106	2.232	2.100	21	44	~~2-102618-0~~
	3	1.906	.106	2.132	2.000	20	42	~~1-102618-9~~
	3	1.806	.106	2.032	1.900	19	40	1-102618-8
6 OBSOLETE	3	1.706	.106	1.932	1.800	18	38	~~1-102618-7~~
	3	1.606	.106	1.832	1.700	17	36	~~1-102618-6~~
	3	1.506	.106	1.732	1.600	16	34	1-102618-5
	3	1.406	.106	1.632	1.500	15	32	1-102618-4
	3	1.306	.106	1.532	1.400	14	30	1-102618-3
	3	1.206	.106	1.432	1.300	13	28	1-102618-2
	3	1.106	.106	1.332	1.200	12	26	1-102618-1
	3	1.006	.106	1.232	1.100	11	24	1-102618-0
6 SUP BY 5-102618-9	3	.906	.106	1.132	1.000	10	22	~~102618-9~~
	3	.806	.106	1.032	.900	9	20	102618-8
	3	—	.406	.932	.800	8	18	102618-7
	3	—	.306	.832	.700	7	16	102618-6
	3	—	.306	.732	.600	6	14	102618-5
	3	—	.206	.632	.500	5	12	102618-4
	3	—	.206	.532	.400	4	10	102618-3
	3	—	.106	.432	.300	3	8	102618-2
	3	—	.106	.332	.200	2	6	102618-1
	PLATING	E	D	C	B	A	NO. OF POSN	ASSEMBLY PART NUMBER

THIS DRAWING IS A CONTROLLED DOCUMENT.

DIMENSIONS: INCHES

TOLERANCES UNLESS OTHERWISE SPECIFIED:
0 PLC ± -
1 PLC ± -
2 PLC ± -
3 PLC ± .005
4 PLC ± -
ANGLES ± -

MATERIAL 5

FINISH SEE TABLE

DWN H MOLL 4-9-87
CHK LA MAYER 4-9-87
APVD R. FEIDT 4-9-87
PRODUCT SPEC —
APPLICATION SPEC —
WEIGHT —

TE Connectivity

NAME HDR ASSY, MOD II, SHROUDED, 4 SIDES, DBL ROW, VERTICAL, .100X.100 C/L, WITH .025 SQ POSTS

SIZE	CAGE CODE	DRAWING NO	RESTRICTED TO
A1	00779	C-102618	—

RESTRICTED CUSTOMER SCALE 4:1 SHEET 1 OF 1 REV L2

4805 (3/11)

Mouser Electronics

Authorized Distributor

Click to View Pricing, Inventory, Delivery & Lifecycle Information:

TE Connectivity:

5-102618-4