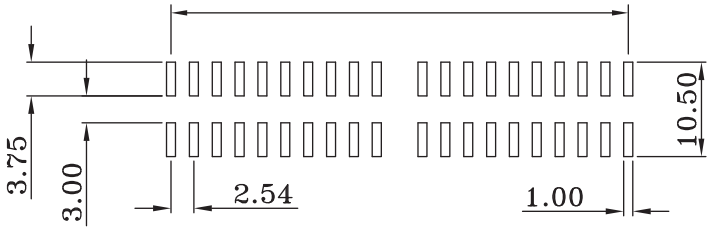


PCB LAYOUT - COMPONENT VIEW
TOLERANCE ±0.05MM

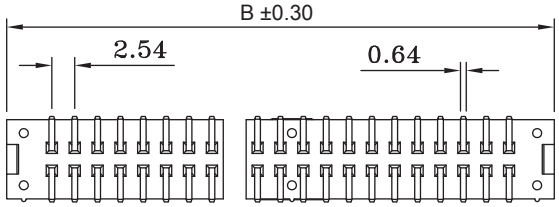


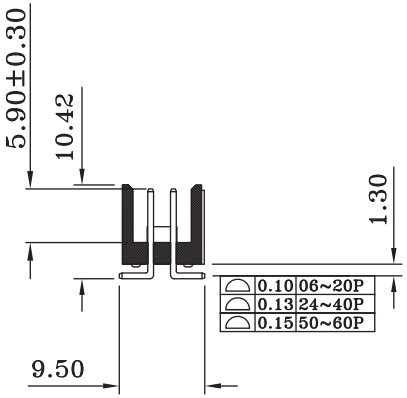


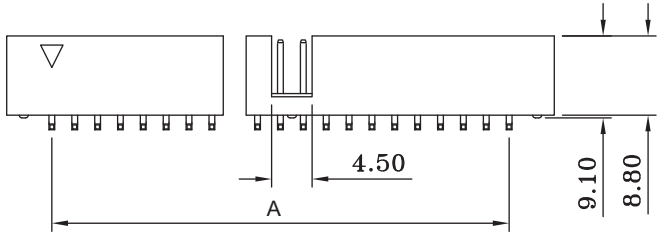


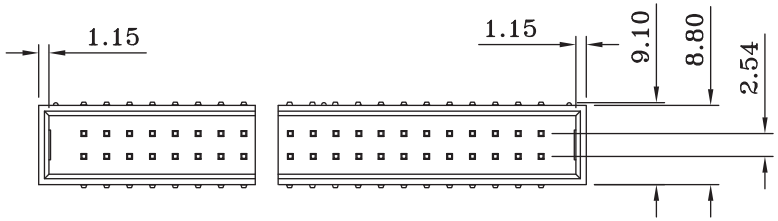


TECHNICAL CHARACTERISTICS

MATERIAL
INSULATOR: PA 9T
COLOR: BLACK
CONTACT MATERIAL: COPPER ALLOYS
CONTACT TYPE: STAMPED
CONTACT PLATING: GOLD
QUALITY CLASS: 3 AS PER CECC 75 301-802
PITCH: 2.54MM

ENVIRONMENTAL
OPERATING TEMPERATURE: -40 UP TO 105°C
FLAMABILITY RATING: UL94-V0
COMPLIANCE: LEAD FREE AND ROHS

ELECTRICAL
CURRENT RATING: 3 A MAX
WORKING VOLTAGE: 250 VAC
INSULATOR RESISTANCE: >5000 MΩ
DIELECTRIC WITHSTANDING VOLTAGE: 1000 VAC/MIN
CONTACT RESISTANCE: 20 mOHM MAX

STANDARD
CERTIFIED: E323964

SOLDERING
JEDEC LEAD FREE REFLOW SOLDERING PROCESS

PACKAGING
TUBE

DIMENSION

A = 2.54 x (NB PINS/2 - 1)
B = (2.54 x NB PINS/2) + 7.5

RoHS Compliant

| REV | DATE | FILE | BY |
|---|---|---|---|
| J | | | |
| I | 08-FEB-16 | UPDATE | AK |
| H | 05-OCT-15 | COPLANARITY | AK |

PROJECTION:

GENERAL TOLERANCE
.X = +/_ 0.2
.XX = +/_ 0.15

APPROVAL: GMo

UNIT: MM
SCALE:
SHEET: 1/3
DRAW: AK

WÜRTH ELEKTRONIK

**DESCRIPTION: WR-BHD 2.54 MM MALE SMT BOX HEADER**

**WERI PART NO: 612 0xx 206 21**

SIZE
**A4**

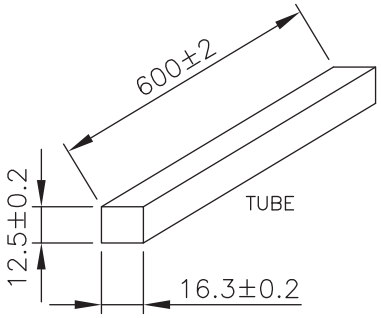


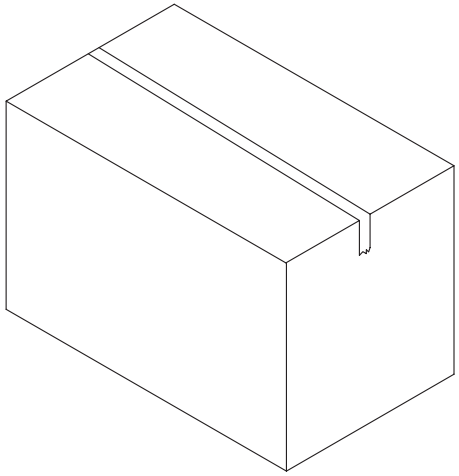

| POSITION | PACK TUBE Q,TY |
|---|---|
| 06P | 37 Pcs |
| 08P | 32 Pcs |
| 10P | 28 Pcs |
| 14P | 22 Pcs |
| 16P | 21 Pcs |
| 20P | 17 Pcs |
| 24P | 15 Pcs |
| 26P | 14 Pcs |
| 34P | 11 Pcs |
| 40P | 10 Pcs |
| 50P | 7 Pcs |
| 60P | 5 Pcs |

RoHS Compliant

| REV | DATE | FILE | BY |
|---|---|---|---|
| G | | | |
| F | | | |
| E | | | |
| D | | | |
| C | | | |
| B | | | |
| A | | | |

PROJECTION:

GENERAL TOLERANCE
.X = +/- 0.2
.XX = +/- 0.15

WÜRTH ELEKTRONIK

APPROVAL: GMo

UNIT: MM
SCALE:
SHEET: 2/3
DRAW: AK

**DESCRIPTION: WR-BHD 2.54 MM MALE SMT BOX HEADER**

**WERI PART NO: 612 0xx 206 21**

SIZE
**A4**

## Cautions and Warnings:

This electronic component is designed and developed with the intention for use in general electronics equipments.
Before incorporating the components into any equipments in the field such as aerospace, aviation, nuclear control, submarine, transportation, (automotive control, train control, ship control), transportation signal, disaster prevention, medical, public information network etc. where higher safety and reliability are especially required or if there is possibility of direct damage or injury to human body, Wurth Elektronik must be asked for a written approval.
In addition, even electronic component in general electronic equipments, when used in electrical circuits that require high safety, reliability functions or performance, the sufficient reliability evaluation-check for the safety must be performed before by the user before usage.

RoHS Compliant

| REV | DATE | FILE | BY |
|---|---|---|---|
| G | | | |
| F | | | |
| E | | | |
| D | | | |
| C | | | |
| B | | | |
| A | 10-SEP-14 | PDF | QL |

PROJECTION:

APPROVAL: JC

GENERAL TOLERANCE
.X = +/_ 0.2
.XX = +/_ 0.15

UNIT: MM
SCALE:
SHEET: 3/3
DRAW: QL

WÜRTH ELEKTRONIK

DESCRIPTION: DISCLAIMER

WERI PART NO: DISCLAIMER

SIZE
A4

# Mouser Electronics

Authorized Distributor

Click to View Pricing, Inventory, Delivery & Lifecycle Information:

Wurth Electronics:

61202620621 61201620621 61202020621 61204020621 61201020621 61234020621 61232020621 61231020621 61231420621 61233420621 61203420621 61201420621 61202420621 61200820621