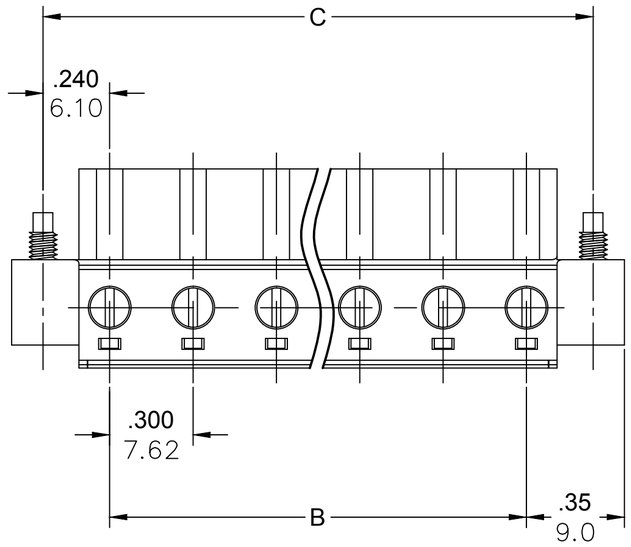

PART NUMBER DATA									
CIRCUITS	PART NUMBER	ENGINEERING NUMBER	COLOR	A IN	mm	B IN	mm	C IN	mm
2	397050002	M750B-04-5-02-3	GREEN	1.01	25.5	.300	7.62	.780	19.81
3	397050003	M750B-04-5-03-3	GREEN	1.31	33.2	.600	15.23	1.080	27.43
4	397050004	M750B-04-5-04-3	GREEN	1.61	40.8	.900	22.85	1.380	35.04
5	397050005	M750B-04-5-05-3	GREEN	1.91	48.4	1.200	30.47	1.680	42.66
6	397050006	M750B-04-5-06-3	GREEN	2.21	56.0	1.500	38.09	1.980	50.28
7	397050007	M750B-04-5-07-3	GREEN	2.50	63.6	1.799	45.70	2.279	57.90
8	397050008	M750B-04-5-08-3	GREEN	2.80	71.2	2.099	53.32	2.579	65.51
9	397050009	M750B-04-5-09-3	GREEN	3.10	78.9	2.399	60.94	2.879	73.13
10	397050010	M750B-04-5-10-3	GREEN	3.40	86.5	2.699	68.56	3.179	80.75
11	397050011	M750B-04-5-11-3	GREEN	3.70	94.1	2.999	76.17	3.479	88.37
12	397050012	M750B-04-5-12-3	GREEN	4.00	101.7	3.299	83.79	3.779	95.98

REF. LAST 2 DIGITS OF PART NUMBER EQUALS NUMBER OF POLES

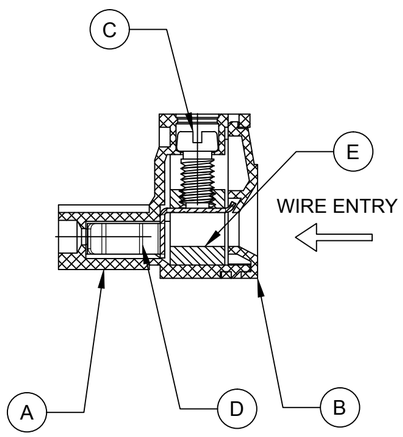

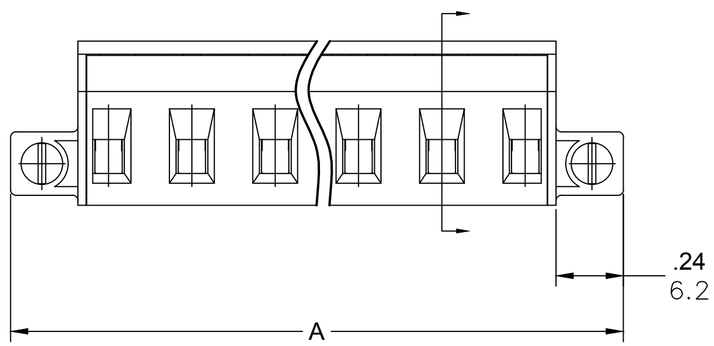

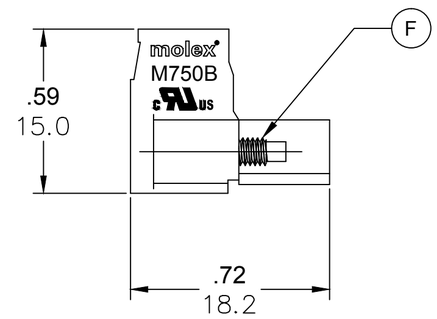

ENGINEERING NUMBER LEGEND

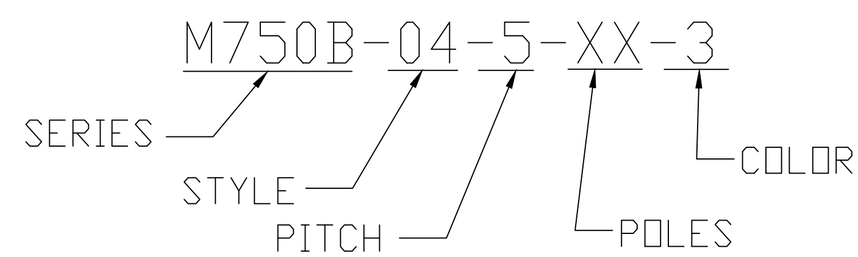

CONTACT FACTORY FOR OPTIONAL COLORS

SPECIFICATIONS

1. MATERIAL:
   A. BODY: PA66.UL94 V-0
   B. COVER: PA66.UL94 V-0
   C. TERMINAL SCREW: M3.0, STEEL.ZINC PLATED
   D. CONTACT: COPPER ALLOY. TIN PLATED
   E. CAGE: BRASS NICKEL PLATED
   F. MOUNTING SCREW: M2.5, STEEL. ZINC PLATED
2. WIRE SIZE: 30 – 12AWG.
3. RATING: 15A AT 51–150V, 10A AT 151 TO 300V
4. SCREW TORQUE: 5.0 IN. LBS.
5. WIRE STRIP LENGTH: .20 (5.0mm)
6. OPERATING TEMPERATURE: –40°C TO +105°C
7. MATES WITH HEADER SERIES: 39725
8. DIMS SHOWN ARE FOR REFERENCE ONLY

RELEASED
EC NO: IPG2014-1194
DRWN: RSTONE 2014/01/22
CH'KD: G. FARNS ----
APPR: JFMURPHY 2014/10/16
DESCRIPTION
REV A

QUALITY SYMBOL
▼=0
(C)=0

GENERAL TOLERANCES (UNLESS SPECIFIED)	mm	INCH
4 PLACES	±---	±---
3 PLACES	±---	±.005
2 PLACES	±0.13	±.01
1 PLACE	±0.3	±---
ANGULAR ±---°		

DRAFT WHERE APPLICABLE MUST REMAIN WITHIN DIMENSIONS

DIMENSION STYLE: IN/MM
SCALE: ---
DESIGN UNITS: METRIC
THIRD ANGLE PROJECTION

DRAWN BY: RSTONE DATE: 2014/01/22
CHECKED BY: G. FARNS DATE: ----
APPROVED BY: JFMURPHY DATE: 2014/10/16

TITLE: 7.62MM EURO PLUG RIGHT ANGLE WITH MOUNTING ENDS

molex MOLEX INCORPORATED

MATERIAL NO.: SEE CHART
DOCUMENT NO.: SD-39705-001
SHEET NO.: 1 0F 1
SIZE: C

THIS DRAWING CONTAINS INFORMATION THAT IS PROPRIETARY TO MOLEX INCORPORATED AND SHOULD NOT BE USED WITHOUT WRITTEN PERMISSION