Alle Rechte vorbehalten/ *All rights reserved*

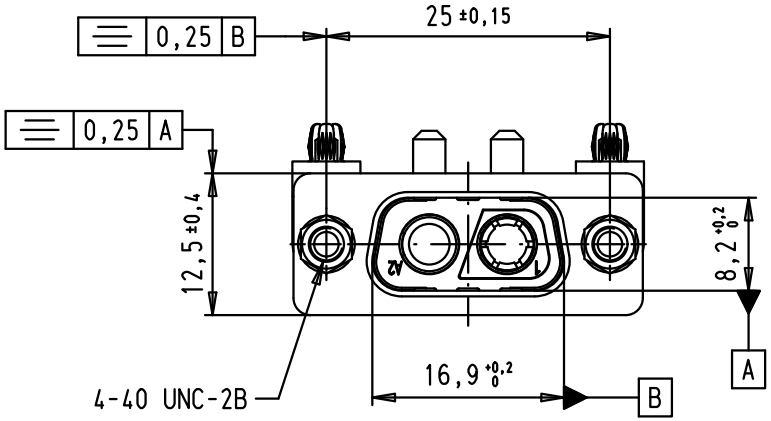

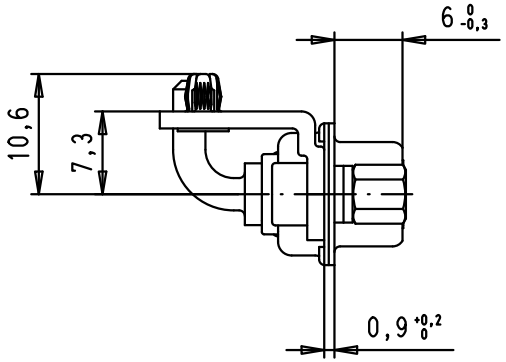

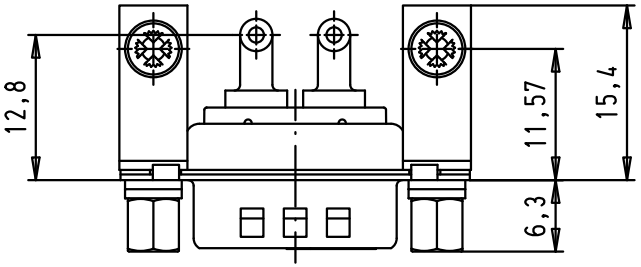

PCB layout, component side, thickness 1,6 mm

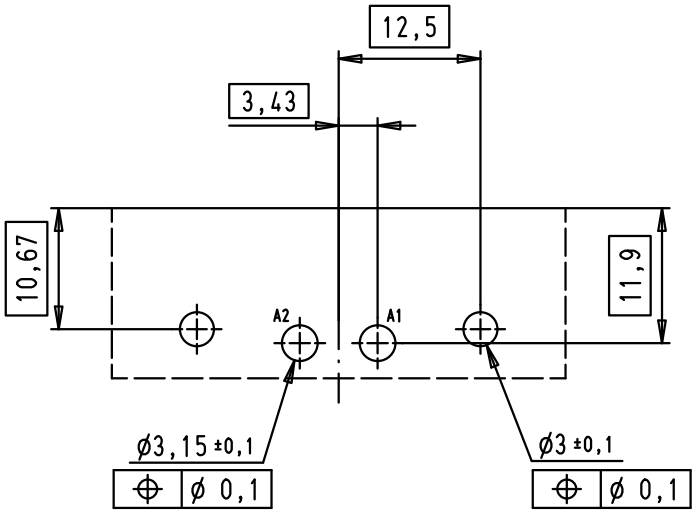

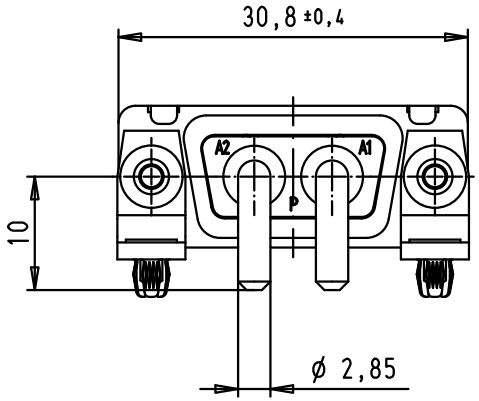

				Dat.	Name
			Detail.	19/01/07	PK
			Insp.		
			Stand.		
EC01864	11/05/10	SC			
33923	19/01/07	PK			
Mod.	Dat.	Name			

All Dim. in mm
Orig. Size DIN A 4

D-Sub, male, angled, 2W2C,
20A power contacts,
tin plated shell with dimples,
clinch nuts and screw locks,
brackets with board locks

Maßstab/ *Scale* 1,5:1

HARTING EURL
F-95972 Paris

TB 09 69 100 9034

Sub.

Blatt/ *Page* 1/1