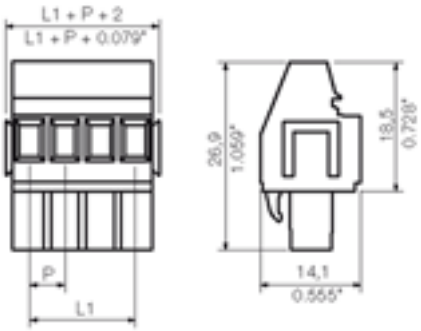

General ordering data	
Order No.	1559660000
Part designation	BLZ 5.08/2/270B SN OR
Version	PCB plug-in connector, Female connectors, Clamping yoke connection, Clamping range, max.: 3.31 mm², Pitch: 5.08 mm, No. of poles: 2, 270°, Box
EAN	4008190086176
Qty.	150 pc(s).

System parameters	
Conductor connection system	Clamping yoke connection
Outgoing direction of conductor	270°
Pitch	5.08 mm
Pitch in inch	0.2 inch
No. of poles	2
No. of rows	1
Screwdriver blade	0.6 x 3.5
Screwdriver blade standard	DIN 5264
Tightening torque, min.	0.4 Nm
Tightening torque, max.	0.5 Nm
Clamping screw	M 2.5
Stripping length	7 mm
L1 in mm	5.08 mm
L1 in inch	0.2 inch
Electric shock protection to DIN VDE 0470	Safe from finger touch

Material data	
Insulating material	PBT
Colour	orange
colour chart	Similar to RAL 2000
Insulating material group	IIIa
Flammability class UL 94	V-0
CTI	>= 200
Contact base material	Copper alloy

Material data	
Contact surface	tinned

Connectable conductors	
Clamping range, min.	0.13 mm²
Clamping range, max.	3.31 mm²
AWG, min.	26
AWG, max.	12
Solid, min. H05(07) V-U	0.2 mm²
Solid, max. H05(07) V-U	2.5 mm²
Flexible, min. H05(07) V-K	0.2 mm²
Flexible, max. H05(07) V-K	2.5 mm²
With wire end ferrule, acc. to DIN 46 228/1, min.	0.2 mm²
With wire end ferrule, acc. to DIN 46 228/1, max.	2.5 mm²
w. plastic collar ferrule, DIN 46228 pt 4, min.	0.2 mm²
w. plastic collar ferrule, DIN 46228 pt 4, max.	2.5 mm²
Gauge to EN 60999 a x b; ø	2.8 mm x 2.0 mm; 2.4 mm

DIN IEC rating data	
Rated current, min. No. pins (Tu=20°C)	15 A
Rated current, max. No. pins (Tu=20°C)	12 A
Rated current, min. No. pins(Tu=40°C)	12 A
Rated current, max. No. pins (Tu=40°C)	10 A
Rated voltage for overvoltage class/pollution severity II/2	400 V
Rated voltage for overvoltage class/pollution severity III/2	320 V
Rated voltage for overvoltage class/pollution severity III/3	250 V
Rated impulse withstand voltage for overvoltage class/pollution severity II/2	4 kV
Rated impulse withstand voltage for overvoltage class/pollution severity III/2	4 kV
Rated impulse withstand voltage for overvoltage class/pollution severity III/3	4 kV
Short-time withstand current resistance	3 x 1s with 120 A

CSA rating data	
Rated voltage (Use group D)	300 V
Rated current (Use group D)	10 A
AWG conductor (field wiring), min.	26
AWG conductor (field wiring), max.	12

UL 1059 rating data	
Rated voltage (Use group D)	300 V
Rated current (Use group D)	10 A
AWG conductor, min.	26
AWG conductor, max.	12

Approvals

Approvals institutes

Classifications

ETIM 2.0	NK
ETIM 3.0	EC001284
eClass 4.1	27-26-07-01
eClass 5.0	27-26-07-01
eClass 5.1	27-26-07-04

Similar products

Order No.	Part designation	Version
1559610000	BLZ 5.08/2/270B SN SW	PCB plug-in connector, Female connectors, Clamping yoke connection, Clamping range, max.: 3.31 mm², Pitch: 5.08 mm, No. of poles: 2, 270°, Box
1559760000	BLZ 5.08/3/270B SN OR	PCB plug-in connector, Female connectors, Clamping yoke connection, Clamping range, max.: 3.31 mm², Pitch: 5.08 mm, No. of poles: 3, 270°, Box
1559710000	BLZ 5.08/3/270B SN SW	PCB plug-in connector, Female connectors, Clamping yoke connection, Clamping range, max.: 3.31 mm², Pitch: 5.08 mm, No. of poles: 3, 270°, Box
1559860000	BLZ 5.08/4/270B SN OR	PCB plug-in connector, Female connectors, Clamping yoke connection, Clamping range, max.: 3.31 mm², Pitch: 5.08 mm, No. of poles: 4, 270°, Box
1559810000	BLZ 5.08/4/270B SN SW	PCB plug-in connector, Female connectors, Clamping yoke connection, Clamping range, max.: 3.31 mm², Pitch: 5.08 mm, No. of poles: 4, 270°, Box
1559960000	BLZ 5.08/5/270B SN OR	PCB plug-in connector, Female connectors, Clamping yoke connection, Clamping range, max.: 3.31 mm², Pitch: 5.08 mm, No. of poles: 5, 270°, Box
1559910000	BLZ 5.08/5/270B SN SW	PCB plug-in connector, Female connectors, Clamping yoke connection, Clamping range, max.: 3.31 mm², Pitch: 5.08 mm, No. of poles: 5, 270°, Box
1560060000	BLZ 5.08/6/270B SN OR	PCB plug-in connector, Female connectors, Clamping yoke connection, Clamping range, max.: 3.31 mm², Pitch: 5.08 mm, No. of poles: 6, 270°, Box

1560010000	BLZ 5.08/6/270B SN SW	PCB plug-in connector, Female connectors, Clamping yoke connection, Clamping range, max.: 3.31 mm², Pitch: 5.08 mm, No. of poles: 6, 270°, Box
1560160000	BLZ 5.08/7/270B SN OR	PCB plug-in connector, Female connectors, Clamping yoke connection, Clamping range, max.: 3.31 mm², Pitch: 5.08 mm, No. of poles: 7, 270°, Box
1560110000	BLZ 5.08/7/270B SN SW	PCB plug-in connector, Female connectors, Clamping yoke connection, Clamping range, max.: 3.31 mm², Pitch: 5.08 mm, No. of poles: 7, 270°, Box
1560260000	BLZ 5.08/8/270B SN OR	PCB plug-in connector, Female connectors, Clamping yoke connection, Clamping range, max.: 3.31 mm², Pitch: 5.08 mm, No. of poles: 8, 270°, Box
1560210000	BLZ 5.08/8/270B SN SW	PCB plug-in connector, Female connectors, Clamping yoke connection, Clamping range, max.: 3.31 mm², Pitch: 5.08 mm, No. of poles: 8, 270°, Box
1560360000	BLZ 5.08/9/270B SN OR	PCB plug-in connector, Female connectors, Clamping yoke connection, Clamping range, max.: 3.31 mm², Pitch: 5.08 mm, No. of poles: 9, 270°, Box
1560460000	BLZ 5.08/10/270B SN OR	PCB plug-in connector, Female connectors, Clamping yoke connection, Clamping range, max.: 3.31 mm², Pitch: 5.08 mm, No. of poles: 10, 270°, Box
1560410000	BLZ 5.08/10/270B SN SW	PCB plug-in connector, Female connectors, Clamping yoke connection, Clamping range, max.: 3.31 mm², Pitch: 5.08 mm, No. of poles: 10, 270°, Box
1560560000	BLZ 5.08/11/270B SN OR	PCB plug-in connector, Female connectors, Clamping yoke connection, Clamping range, max.: 3.31 mm², Pitch: 5.08 mm, No. of poles: 11, 270°, Box
1560510000	BLZ 5.08/11/270B SN SW	PCB plug-in connector, Female connectors, Clamping yoke connection, Clamping range, max.: 3.31 mm², Pitch: 5.08 mm, No. of poles: 11, 270°, Box
1560660000	BLZ 5.08/12/270B SN OR	PCB plug-in connector, Female connectors, Clamping yoke connection, Clamping range, max.: 3.31 mm², Pitch: 5.08 mm, No. of poles: 12, 270°, Box
1560610000	BLZ 5.08/12/270B SN SW	PCB plug-in connector, Female connectors, Clamping yoke connection, Clamping range, max.: 3.31 mm², Pitch: 5.08 mm, No. of poles: 12, 270°, Box
1560760000	BLZ 5.08/13/270B SN OR	PCB plug-in connector, Female connectors, Clamping yoke connection, Clamping range, max.: 3.31 mm², Pitch: 5.08 mm, No. of poles: 13, 270°, Box
1560860000	BLZ 5.08/14/270B SN OR	PCB plug-in connector, Female connectors, Clamping yoke connection, Clamping range, max.: 3.31 mm², Pitch: 5.08 mm, No. of poles: 14, 270°, Box
1560960000	BLZ 5.08/15/270B SN OR	PCB plug-in connector, Female connectors, Clamping yoke connection, Clamping range, max.: 3.31 mm², Pitch: 5.08 mm, No. of poles: 15, 270°, Box
1561060000	BLZ 5.08/16/270B SN OR	PCB plug-in connector, Female connectors, Clamping yoke connection, Clamping range, max.: 3.31 mm², Pitch: 5.08 mm, No. of poles: 16, 270°, Box
1561160000	BLZ 5.08/17/270B SN OR	PCB plug-in connector, Female connectors, Clamping yoke connection, Clamping range, max.: 3.31 mm², Pitch: 5.08 mm, No. of poles: 17, 270°, Box

1561260000	BLZ 5.08/18/270B SN OR	PCB plug-in connector, Female connectors, Clamping yoke connection, Clamping range, max.: 3.31 mm², Pitch: 5.08 mm, No. of poles: 18, 270°, Box
1561360000	BLZ 5.08/19/270B SN OR	PCB plug-in connector, Female connectors, Clamping yoke connection, Clamping range, max.: 3.31 mm², Pitch: 5.08 mm, No. of poles: 19, 270°, Box
1561460000	BLZ 5.08/20/270B SN OR	PCB plug-in connector, Female connectors, Clamping yoke connection, Clamping range, max.: 3.31 mm², Pitch: 5.08 mm, No. of poles: 20, 270°, Box
1561560000	BLZ 5.08/21/270B SN OR	PCB plug-in connector, Female connectors, Clamping yoke connection, Clamping range, max.: 3.31 mm², Pitch: 5.08 mm, No. of poles: 21, 270°, Box
1561660000	BLZ 5.08/22/270B SN OR	PCB plug-in connector, Female connectors, Clamping yoke connection, Clamping range, max.: 3.31 mm², Pitch: 5.08 mm, No. of poles: 22, 270°, Box
1561760000	BLZ 5.08/23/270B SN OR	PCB plug-in connector, Female connectors, Clamping yoke connection, Clamping range, max.: 3.31 mm², Pitch: 5.08 mm, No. of poles: 23, 270°, Box
1561860000	BLZ 5.08/24/270B SN OR	PCB plug-in connector, Female connectors, Clamping yoke connection, Clamping range, max.: 3.31 mm², Pitch: 5.08 mm, No. of poles: 24, 270°, Box