THIS DRAWING IS UNPUBLISHED. RELEASED FOR PUBLICATION -.- .
© COPYRIGHT - BY TYCO ELECTRONICS CORPORATION. ALL INTERNATIONAL RIGHTS RESERVED.

DESIGNED FOR USE WITH .085 S/R	
CABLE ENTRY DIAMETER MINIMUM	
HOUSING	.089
CONTACT	.0215

LOC —
DIST —

REVISIONS

P	LTR	DESCRIPTION	DATE	DWN	APVD
	C	REV PER ECO-08-021971	13JAN09	PY	BM

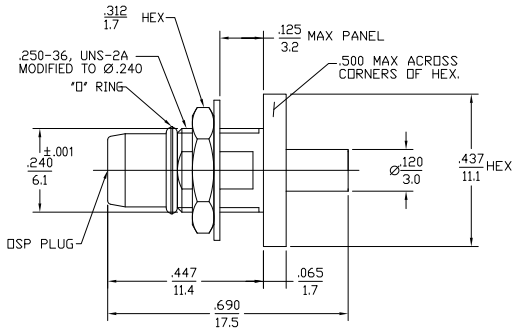

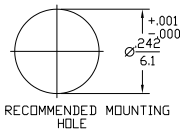

ELECTRICAL	
Nominal Impedance (Ohms)	50
Frequency Range (GHz) DC to	22
Volt Rating (VRMS MAX)	
@ Sea Level	335
VSWR	1.05+.005f(GHz) DC to 18 GHz
	1.05+.009f(GHz) DC to 22 GHz
Insertion Loss (dB MAX)	.03x $\sqrt{f(GHz)}$
RF Leakage (dB MIN) (Interface Only, Fully Mated)	-(90-f(GHz))
Corona, 70,000 Ft (VRMS MIN)	250
Dielectric Withstanding Voltage (VRMS MIN) @ Sea Level	1000
Contact Resistance (Milliohms MAX)	
Center Contact	2.0
Outer Contact	2.0
Cable to Housing	0.5
RF High Potential @ Sea Level (VRMS MIN @ 5 MHz)	670
I.R.(Megohms MIN)	5000

MECHANICAL	
Interface Dimensions	MIL-STD 348A, FIG 321-1
Mating Characteristics:	
Insertion (MAX Lbs)	3
Withdrawal (MIN Oz)	1
Force to Engage (In-Lbs MAX)	3
& Disengage (In-Lbs MAX)	1.5
Center Contact Captivation	
Axial (Lbs)	6
Cable Retention	
Axial Force (Lbs MIN)	30
Torque (In-Oz MIN)	16
Weight (Grams)	

ENVIRONMENTAL
TEMPERATURE RATING -65° TO +125°C
Vibration MIL-STD-202, Method 204, Condition D
Shock MIL-STD-202, Method 213, Condition I
Thermal Shock MIL-STD-202, Method 107, Condition B
Moisture Resistance MIL-STD-202, Method 106
Corrosion - MIL-STD-202, Method 101, Condition B

.XXX = in
XX.X = mm (REF)

COMPONENT	MATERIAL	FINISH
HOUSING MOUNTING NUT LOCKWASHER	STAINLESS STEEL PER ASTM-A484 AND ASTM-A582, TYPE 303	GOLD PLATE PER MIL-G-45204
DIELECTRIC	TFE FLUOROCARBON PER ASTM-D-1457	N/A
CENTER CONTACT	BERYLLIUM COPPER PER ASTM-B-196 OR ASTM-B-197, ALLOY C17300, CONDITION H	GOLD PLATE PER MIL-G-45204
O-RING	FLOUROSILICONE PER MIL-R-25988, CLASS 1, TYPE 1	N/A

THIS DRAWING IS A CONTROLLED DOCUMENT.

DIMENSIONS: INCHES

TOLERANCES UNLESS OTHERWISE SPECIFIED:
0 PLC ± -
1 PLC ± -
2 PLC ± -
3 PLC ± -
4 PLC ± -
ANGLES ± -

MATERIAL: SEE TABLE
FINISH: SEE TABLE

DWN P. YEAGER 13JAN2009
CHK W. MOYER 14JAN09
APVD W. MOYER 14JAN09
PRODUCT SPEC —
APPLICATION SPEC —
WEIGHT —

Tyco Electronics
Tyco Electronics Corporation
Harrisburg, PA 17105-3608

NAME: OSP BULKHEAD FEEDTHRU CABLE PLUG DIRECT SOLDER ATTACHMENT P/N 84148/85072ZSGB

SIZE	CAGE CODE	DRAWING NO	RESTRICTED TO
A2	00779	C-1059386	—

CUSTOMER DRAWING | SCALE 5:1 | SHEET 1 OF 1 | REV C

1471-9 (1/08)

1059386

Downloaded from Elcodis.com electronic components distributor