THIS DRAWING IS UNPUBLISHED.
VERTRAULICHE UNVEROEFFENTLICHTE ZEICHNUNG.
© COPYRIGHT 1997 BY AMP INCORPORATED. ALL RIGHTS RESERVED.
ALLE RECHTE VORBEHALTEN.

RELEASED FOR PUBLICATION ,1997
FREI FUER VEROEFFENTLICHUNG

MATED WITH:
PASSEND ZU:
Bg6

LOC	DIST
A1	–

PROJECT NR.
–

REVISIONS
ABNDERUNGEN

P	LTR	DESCRIPTION BESCHREIBUNG	DATE	DWN	APVD
	A6	text to packaging corrected ECR-08-002560	30.01.08	SR	ST
	B	ECR-14-015287	17NOV14	RK	MKO

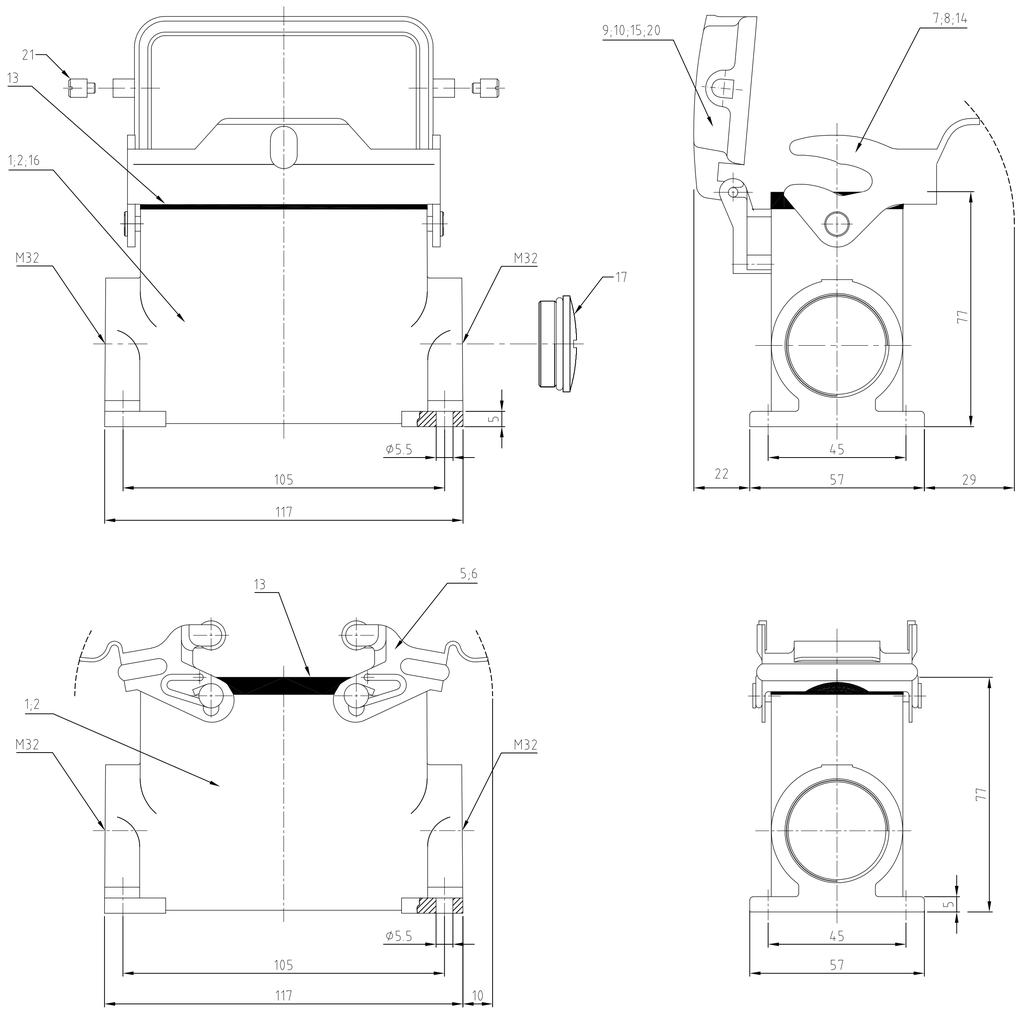

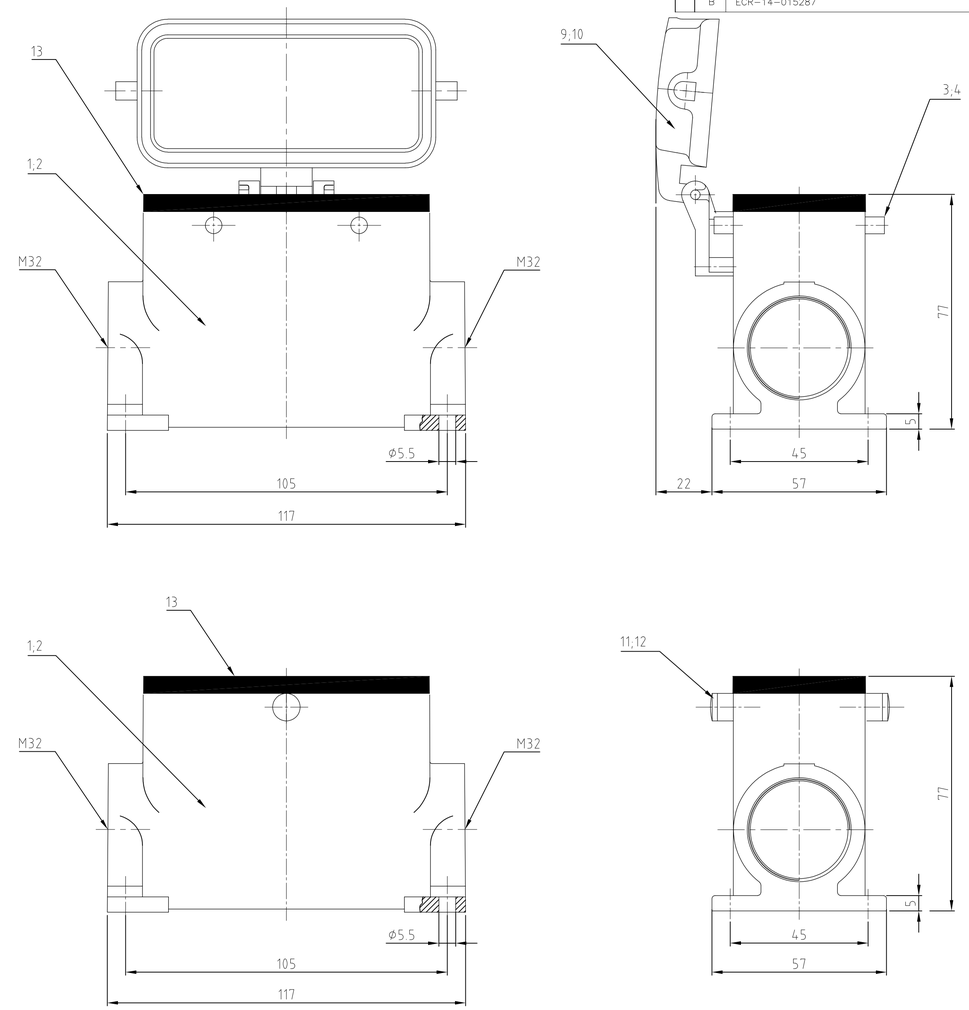

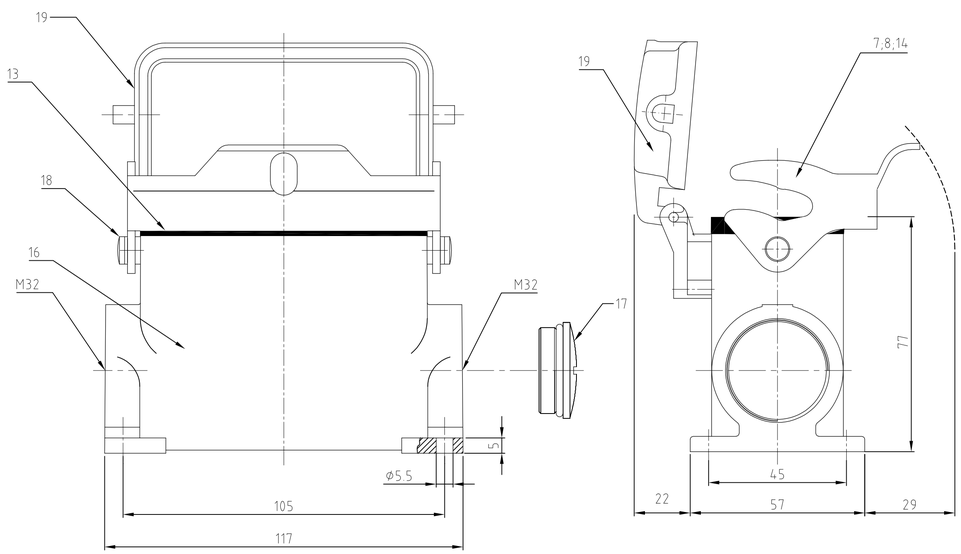

NOTES:

1 Material: Housing: aluminium diecasting alloy
Seals: NEOPRENE

2 SURFACE: VARNISH- GREY
- ALUMINIUM OXID +
VARNISH BLACK

3 PACKAGING:
PACKAGING QUANTITY: 5 PIECES

4 SPECIAL PACKAGING: Krauss-Maffei
PACKAGING UNIT: 55 PIECES IN Krauss-Maffei-Box

5 VARNISH ON THE INSIDE NOT NECESARILY

1-4	1-3	1-2	1-1	0-9	1-0	0-6	0-2	0-7	0-3	0-8	0-4	0-5	0-1	DESCRIPTION	MATERIAL	SURFACE	COLOR	ITEM No.	
						2								clip bolt	stainless steel			21	
						1								cover	aluminium/ALU	aluminium oxid	black	20	
1														cover	aluminium/ALU		grey	19	Neutral
2														clip bolt	steel	zink plated	blue	18	M5
1	1													Blanking Piece with Seal	steel		blue	17	M32
1	1													Surface mounted housing side entry	aluminium/ALU		grau	16	Neutral
			1											cover	aluminium/ALU		red	15	
			1											Surface mounted housing side entry	aluminium/ALU		red	14	
1	1	1	1	1	1	1	1	1	1	1	1	1	1	profile seal	Neoprene		black	13	
				2										central clip bolt	stainless steel	blank		12	
					2									central clip bolt	steel	zink plated	blau/blue	11	
						1						1		cover	aluminium/ALU	aluminium oxid	black	10	
							1						1	cover	aluminium/ALU		grey	9	
								1						side clip	stainless steel	blank		8	
1	1		1				1		1					side clip	steel	zink plated	blue	7	
										2				locking clip	stainless steel	blank		6	
		2									2			locking clip	steel	zink plated	blue	5	
												4		clip bolt	stainless steel	blank		4	
													4	clip bolt	steel	zink plated	blue	3	
				1		1		1		1		1		Surface mounted housing side entry	aluminium/ALU	aluminium oxid	black	2	
		1			1		1		1		1		1	Surface mounted housing side entry	aluminium/ALU		grey	1	

3	3	4	3	3	3	3	3	3	3	3	3	3	3	
HD.40.SGD-LB.2.M32.Z-BS	HD.40.SG-LB.2.M32.Z-BS	HD.40.SG-VS.2.M32.Z-KM	HD.40.SGD-LB.2.M32.Z	HD-K/Z.40.SG-ZVGR.2.M32.Z	HD-Z.40.SG-ZVGR.2.M32.Z	HD-K.40.SGD-LB.2.M32.Z	HD.40.SGD-LB.2.M32.Z	HD-K.40.SG-LB.2.M32.Z	HD.40.SG-LB.2.M32.Z	HD-K.40.SG-VS.2.M32.Z	HD.40.SG-VS.2.M32.Z	HD-K.40.SGD.2.M32.Z	HD.40.SGD.2.M32.Z	DESCRIPTION

THIS DRAWING IS A CONTROLLED DOCUMENT FOR AMP INCORPORATED. IT IS SUBJECT TO CHANGE AND THE CONTROLLING ENGINEERING ORGANIZATION SHOULD BE CONTACTED FOR THE LATEST REVISION.
DIESE ZEICHNUNG IST EIN KONTROLLIERTES DOKUMENT FUER AMP INCORPORATED. ANDERUNGEN UND DER TECHNISCHE ANSPRECHPARTNER SOLLTEN VORHERIGE UEBERPRUEFT WERDEN, DA DIESE UNVERBINDLICH DEN JEWEILS LETZTGUELTIGEN ANDERUNGSSTAND ERFAHREN SIE AUF ANFRAGE.

DIMENSIONS:
DIMENSIONEN:
mm

TOLERANCES UNLESS OTHERWISE SPECIFIED:
ALLGEMEINTOLERANZEN
n. ISO 8015
n. ISO 2768 – mH –E
n. DIN 16901 – 1+0
0 PLC ±.
1 PLC ±.
2 PLC ±.
3 PLC ±.
ANGLES / WINKEL ±.

MATERIAL

FINISH / OBERFLAECHE/FARBE

DWN Schneider	04.06.02	
CHK Schweiger	04.06.02	
APVD –		
PRODUCT SPEC PRODUKTSPEZ. –		
APPLICATION SPEC VERARBEITUNGSSPEZ. –		
WEIGHT GEWICHT –		

TE Connectivity

NAME
Surface mounted housing side entry
Sockelgehäuse HD.40.SG/SGD.2.M32.Z

SIZE	CAGE CODE	DRAWING NO ZEICHNUNGS-NR.	RESTRICTED TO NUR FUER
A1	00779	C-1106451	–

CUSTOMER DRAWING /KUNDENZEICHNUNG
MASSSTAB 1:1 BLATT 1 OF VON 1 REV B

This is a TRANSLATED file from Computervision, Inc., Medusa Revision 12.2.5T

Mouser Electronics

Authorized Distributor

Click to View Pricing, Inventory, Delivery & Lifecycle Information:

TE Connectivity:

1-1106451-6