THIS DRAWING IS UNPUBLISHED. RELEASED FOR PUBLICATION -,- .
© COPYRIGHT - By - ALL RIGHTS RESERVED.

LOC	DIST
—	—

REVISIONS

P	LTR	DESCRIPTION	DATE	DWN	APVD
	E	END STAND OFF WIDTH INCREASED	07JAN2016	KJK	PS

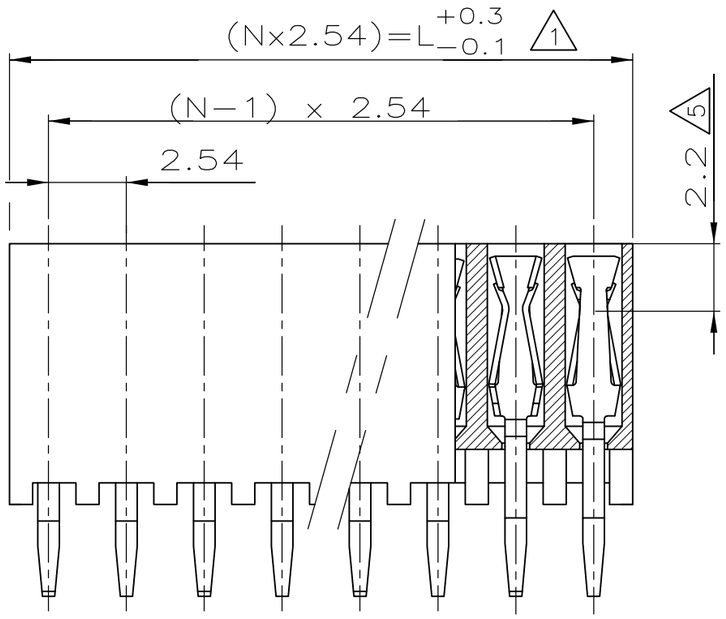

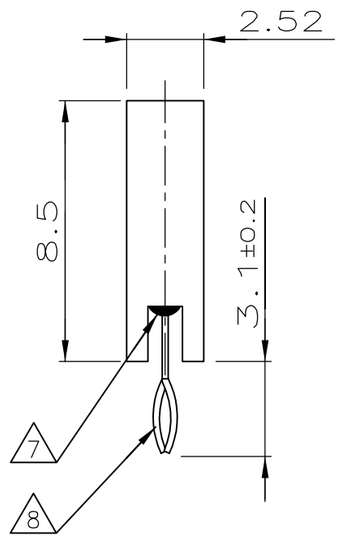

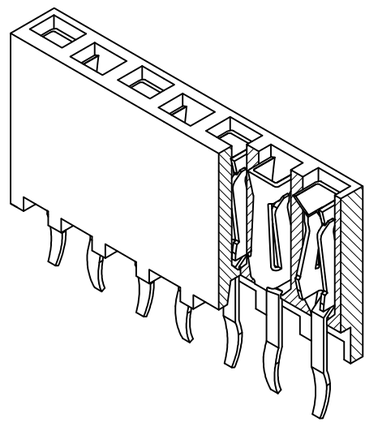

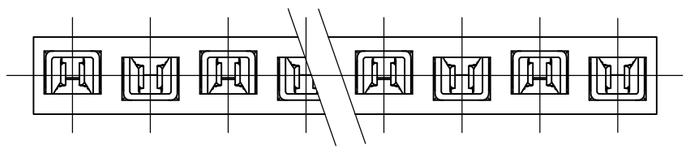

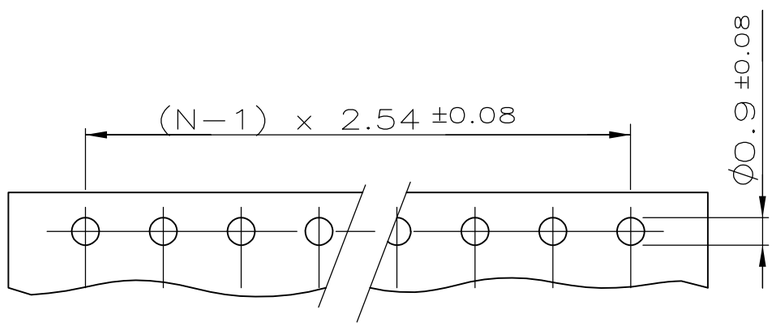

P.C.−BOARD HOLE−PATTERN

NOTES:

1. TO DETERMINE DIMENSIONS TAKE N = NO. OF POS.
FOR EXAMPLE: 10 POS.: N x 2,54 = 25,4 mm
FOR ORDER NO. USE BASIC NO. + NO. OF POS.
FOR EXAMPLE: 2 POS.= 215 304−2 (SHORTEST VERSION)
36 POS.= 3−215 304−6 (LONGEST VERSION)

2. HOUSING MATERIAL: GREEN GLASSFILLED POLYESTER, UL 94V−0
CONTACT MATERIAL: PHOSPHOR BRONZE.

3. PLATING: 2,5µm−4µm TIN OVER MIN 0,5µm NICKEL

4. MATES WITH 0,63 SQUARE/ROUND MODU POSTS.

5. CONTACT−POINT.

6. RECOMMENDED P.C.BOARD−THICKNESS: 1,6.

7. HIGH TEMPERATURE SEALANT.

8. RETENTION FEATURE.

9. HV100 CONNECTOR PACKED IN ANTISTATIC BLISTER TRAY

POS.	L	PART NUMBER	
–	–	–	
2	5.08	215 304−2	
3	7.62	−3	
4	10.16	−4	
5	12.70	−5	
6	15.24	−6	
7	17.78	−7	
8	20.32	−8	
9	22.86	−9	
10	25.40	1− −0	
11	27.94	1− −1	
12	30.48	1− −2	
13	33.02	1− −3	
14	35.56	1− −4	OBSOLETE
15	38.10	1− −5	
16	40.64	1− −6	
17	43.18	1− −7	
18	45.72	1− −8	
19	48.26	1− −9	
20	50.80	2− −0	
21	53.34	2− −1	OBSOLETE
22	55.88	2− −2	OBSOLETE
23	58.42	2− −3	OBSOLETE
24	60.96	2− −4	OBSOLETE
25	63.50	2− −5	OBSOLETE
26	66.04	2− −6	OBSOLETE
27	68.58	2− −7	OBSOLETE
28	71.12	2− −8	OBSOLETE
29	73.66	2− −9	OBSOLETE
30	76.20	3− −0	OBSOLETE
31	78.74	3− −1	OBSOLETE
32	81.28	3− −2	OBSOLETE
33	83.82	3− −3	OBSOLETE
34	86.36	3− −4	OBSOLETE
35	88.90	3− −5	OBSOLETE
36	91.44	3− 215 304−6	

VERWENDET FüR
E 92−9803

THIS DRAWING IS A CONTROLLED DOCUMENT.

DIMENSIONS: mm

TOLERANCES UNLESS OTHERWISE SPECIFIED: ±0.1mm
0 PLC ± −
1 PLC ± −
2 PLC ± −
3 PLC ± −
4 PLC ± −
ANGLES ± −

MATERIAL: SEE NOTES
FINISH: SEE NOTES

DWN R.VISSER 09.09.86
CHK W.SIMONS –
APVD —
PRODUCT SPEC 108−19056
APPLICATION SPEC —
WEIGHT —

TE Connectivity

NAME: HV 100 VERTICAL CONNECTOR SINGLE ROW, 8,5mm HEIGHT, TOP ENTRY, TIN (SEALED VERSION)

SIZE	CAGE CODE	DRAWING NO	RESTRICTED TO
A3	00779	C−215304	—

CUSTOMER DRAWING | SCALE 5:1 | SHEET 1 OF 1 | REV E