ADJUSTABLE SQUARE FLANGE JACK RECEPTACLE WITH CYLINDRICAL CONTACT

R125.415.030

Series : **SMA**

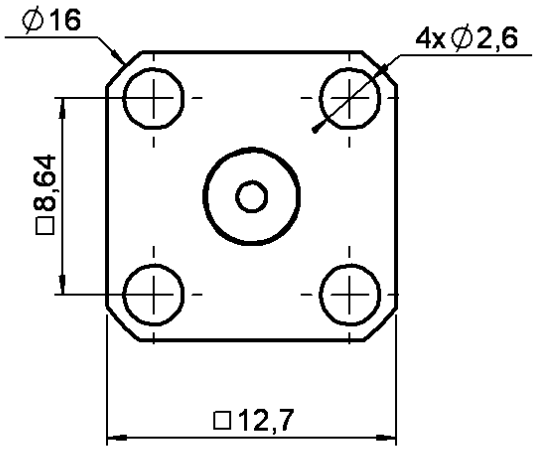

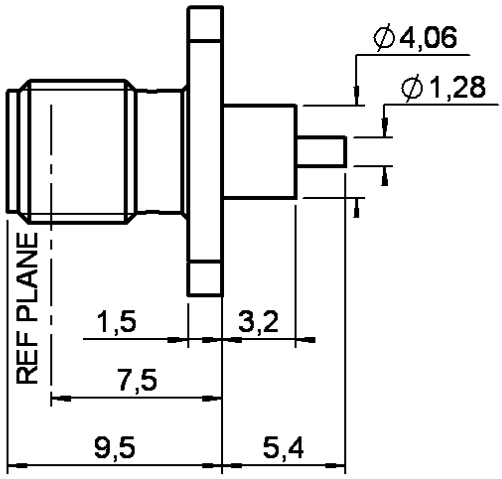

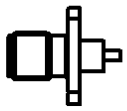

Scale : 1/1

PANEL CUT OUT

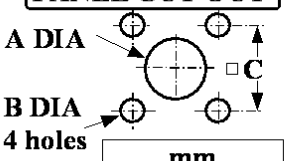

	mm	
	Maxi	**mini**
A	**4.2**	**4.1**
B	**2.7**	**2.6**
C	**8.69**	**8.59**

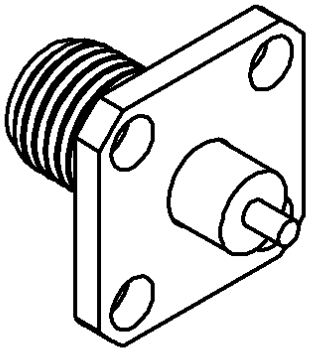

All dimensions are in mm.

COMPONENTS	MATERIALS	PLATINGS (µm)
BODY	**STAINLESS STEEL**	**GOLD 0.5 OVER NICKEL 2**
CENTER CONTACT	**BERYLLIUM COPPER**	**GOLD 1.3 OVER NICKEL 2**
OUTER CONTACT	-	-
INSULATOR	**PTFE**	
GASKET	-	
OTHERS PARTS	-	-
-	-	-
-	-	-

Issue : 0222 A

In the effort to improve our products, we reserve the right to make changes judged to be necessary.

RADIALL®

ADJUSTABLE SQUARE FLANGE JACK RECEPTACLE WITH CYLINDRICAL CONTACT

R125.415.030

Series : **SMA**

PACKAGING

Standard	Unit	Other
1	**-**	**Contact us**

SPECIFICATION

ELECTRICAL CHARACTERISTICS

Impedance			**50**	Ω
Frequency			**0-26**	GHz
VSWR	**1.06**	+	**0.002**	x F(GHz) Maxi
Insertion loss			**0.07***	√F(GHz) dB Maxi
RF leakage		- (	**60**	- F(GHz)) dB Maxi
Voltage rating			**500**	Veff Maxi
Dielectric withstanding voltage			**1000**	Veff mini
Insulation resistance			**5000**	MΩ mini

ENVIRONMENTAL

Operating temperature	**-65/+165**	° C
Hermetic seal	**NA**	Atm.cm3/s
Panel leakage	**NA**	

OTHERS CHARACTERISTICS

Assembly instruction **NA**

Others :
* Coaxial Transmission Line Only

MECHANICAL CHARACTERISTICS

Center contact retention		
Axial force – Mating end	**27**	N mini
Axial force – Opposite end	**27**	N mini
Torque	**2.8**	N.cm mini
Recommended torque		
Mating	**NA**	N.cm
Panel nut	**NA**	N.cm
Mating life	**500**	Cycles mini
Weight	**2.685**	g

Issue : 0222 A

In the effort to improve our products, we reserve the right to make changes judged to be necessary.

RADIALL®

Mouser Electronics

Authorized Distributor

Click to View Pricing, Inventory, Delivery & Lifecycle Information:

Radiall:
R125415030