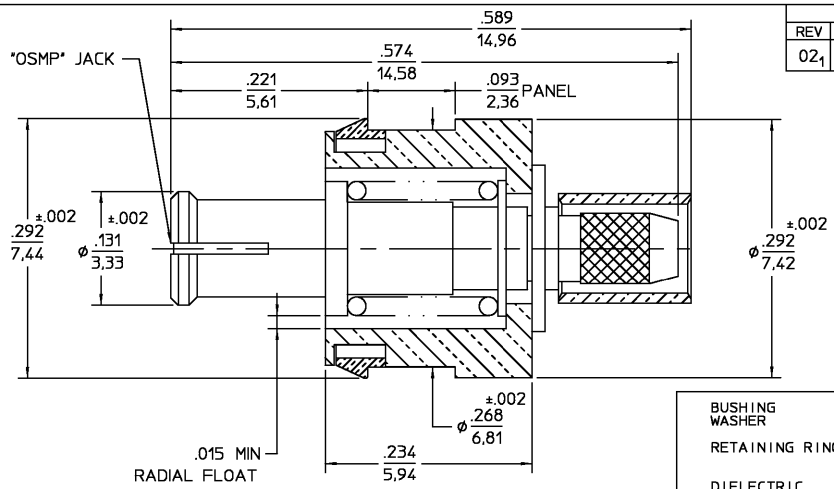

REVISIONS			
REV	DESCRIPTION	DATE	APPROVED
02_1	REVISED	3/18/99	PCV

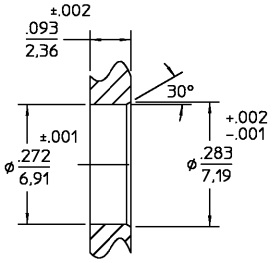

RECOMMENDED MOUNTING DIMENSIONS scale 30:1

ELECTRICAL	
Nominal Impedance (Ohms)	50 ±1
Frequency Range (GHz) DC to	3.0
Volt Rating (VRMS MAX) @ Sea Level	335
VSWR	1.20 MAX @ 3 GHz
Insertion Loss (dB MIN)	.06 $\sqrt{f}$GHz
Corona, 70,000 Ft (VRMS MIN)	190
Dielectric Withstanding Voltage (VRMS MIN) @ Sea Level	1000
Contact Resistance (Milliohms MAX)	
Center Contact	3.0
Outer Contact	2.0
Cable to Housing	0.5
RF High Potential @ Sea Level (VRMS MIN @ 5 MHz)	670
I.R.(Megohms MIN)	5000

MECHANICAL	
Force (with Smooth Bore) to Engage (Lbs MAX)	2.0
Disengage (Lbs MIN)	0.5
Center Contact Retention (Lbs MIN)	N/A
Axial Float	.040 MIN
Force To Begin Axial Float (Lbs Min)	2.5

Connector retention on panel to be Min 12 Lbs

.XXX = in
XX.X = mm (REF)

ENVIRONMENTAL
Temperature Rating -65°C to +125°C
Vibration MIL-STD-202, Method 204, Condition D
Shock MIL-STD-202, Method 213, Condition I
Thermal Shock MIL-STD-202, Method 107, Condition B
Corrosion - MIL-STD-202, Method 101, Condition B

DESIGNED FOR USE WITH RG178/U & 196 CABLES	
CABLE ENTRY DIAMETER MINIMUM	
HOUSING	.036
CONTACT	.012

COMPONENT	MATERIAL	FINISH
BUSHING WASHER	BRASS PER ASTM-B-16, HALF-HARD	NICKEL PLATE PER QQ-N-290
RETAINING RING	STAINLESS STEEL	PASSIVATE PER QQ-P-35
DIELECTRIC	PTFE FLUOROCARBON PER ASTM-D-1457	N/A
HOUSING CENTER CONTACT RETAINING CLIP	BERYLLIUM COPPER PER ASTM-B-196 OR ASTM-B-197, ALLOY C17300, CONDITION H	GOLD PLATE PER MIL-G-45204
SPRING	MUSIC WIRE	CADIUM PLATE PER QQ-P-416
FERRULE	COPPER OR BRASS ALLOY ROCKWELL F65 MAXIMUM	GOLD PLATE PER MIL-G-45204

UNLESS OTHERWISE SPECIFIED DIMENSIONS ARE IN INCHES
TOLERANCE ON
FRAC. ± 1/64 DEC. ±.005 ANGLES ± 1°

DRAWN BY DATE 1/28/99
CHECKED BY
APP'D BY 1/29/99

AMP

AMP Incorporated
140 Fourth Avenue
Waltham, MA 02451-7599

These drawings and specifications are the property of AMP Incorporated and shall not be reproduced or copied or used in whole or in part as the basis for the manufacture or sale of item(s) without written permission.

USE ASS'Y PROCEDURE

408-04743
NO. A.P. 29-022

TITLE OSMP FLOATING PANEL MOUNT CABLE JACK CRIMP ATTACHMENT

SIZE	CODE IDENT NO.		REV
B	26805	2936-5001-63	02_1
SCALE 15:1			SHEET 1 OF 1

CUSTOMER DRAWING

AMP PART # 1330019-1
SHEET 1 OF 1 REV A

Downloaded from Elcodis.com electronic components distributor