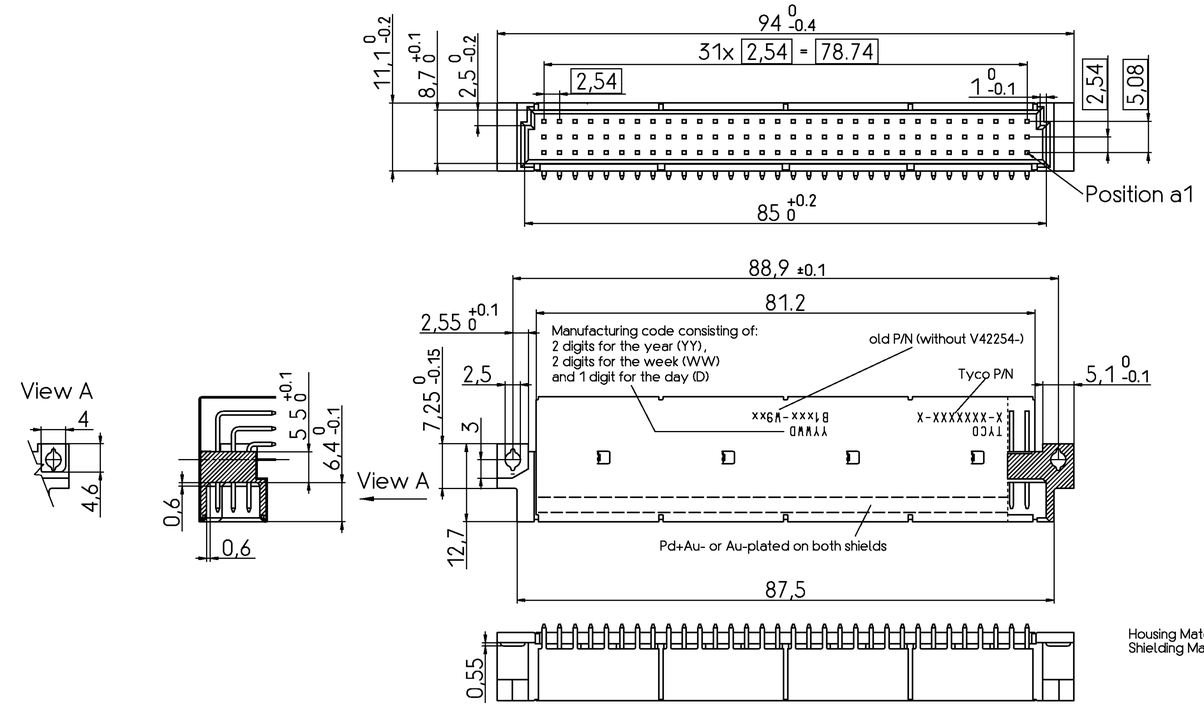

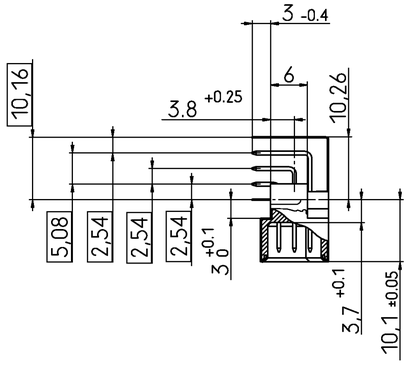

Housing Material : PCT 30% glassfilled (UL94V-0), black
Shielding Material : Copper Alloy

Male connecctor with board locks

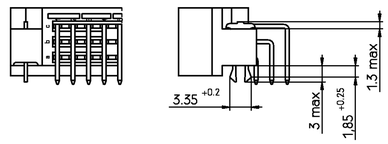

Mounted in PC-boards
of 1.5 to 1.8 mm
Fm =< 60 N
Fr >= 20 N
Fr >= 200 N, wenn
soldered-in

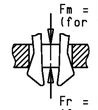

Fm = Mounting force
(for 1 connector = 2 Clips)

Fr = Retention force
(for 1 connector = 2 Clips)

Mounted in PC-boards
over 1.8 mm
Fm =< 60 N
Fr >= 16 N

Termination Style

Soldering/Wire-Wrap pins

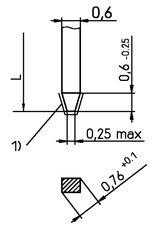

	L	Code
	3 -0.4	00

V42254-B1✱✱✱-C✱✱✱

1) Cutting edges not plated

Terminations with galvanic Sn plating

PC Board Layout

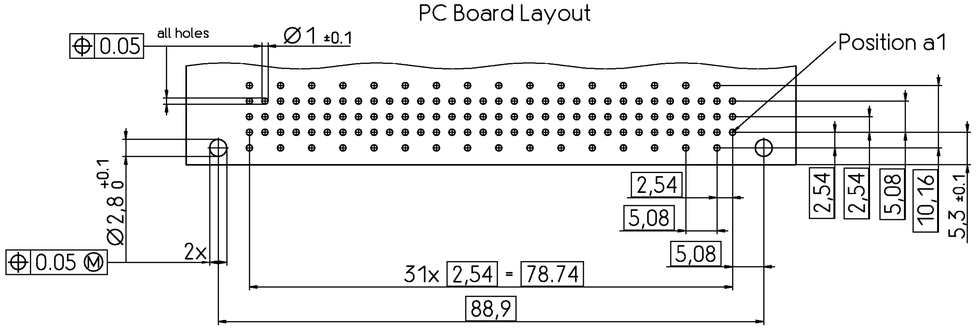

V42254 - B1✱✱✱ - +✱✱✱

code for performance level

code for termination style

Style, no of contacts
and contact assignment

Contact: Dimensions, plating, material, premating

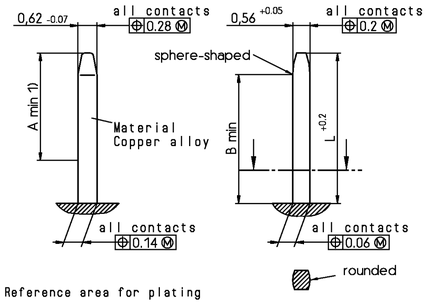

1) Reference area for plating

	L	A	B
normal contacts	4.8	3.5	4.2
pre-mating contacts	5.8	4.5	5.2

V42254-B1✱✱✱-C✱✱✱

Performance level acc to DIN41612 and IEC603-2	Noble metals	Code
Class I	PdNi + Au or Au	1
	Au	4
Class II	PdNi + Au or Au	2
	Au	5
Class III	PdNi + Au or Au	3

Nickel underlayer
Protection film : HF-grease

Old Part Number	Tyco Part Number	Style & Number of Positions	Termination posts	Loaded Rows	Standard Pre-Mating 1mm 1)	Performance Level	Board Locks	Special Features
V42254B1200W910	1393648-2	W96	3mm, right-angle solder posts	every row , every cavity	No	2	Yes	-
V42254B1200W960	1393648-3	W96	3mm, right-angle solder posts	every row , every cavity	No	2	No	-
V42254B1200W970	1393648-4	W96	3mm, right-angle solder posts	every row , every cavity	No	2	No	Lower shield only / kinked-tail
V42254B1400W960	1393648-9	W96	3mm, right-angle solder posts	every row , every cavity	No	1	No	-

1) First and last contact of each loaded row is
a premating (make first / break last) contact.

Active part numbers.
Contact Tyco Electronics for other configuration availability

THIS INFORMATION IS CONFIDENTIAL AND PROPRIETARY TO TYCO ELECTRONICS CORPORATION AND ITS WORLDWIDE WORLDWIDE SUBSIDIARIES AND AFFILIATES. IT MAY NOT BE DISCLOSED TO ANYONE, OTHER THAN TYCO ELECTRONICS CORORATION, WITHOUT WRITTEN AUTHORIZATION FROM TYCO ELECTRONICS CORPORATION, HARRISBURG, PENNSYLVANIA USA.

tyco Electronics

TYCO ELECTRONICS CORPORATION
OOSTKAMP - BELGIUM

Loc GW DIMENSIONS IN MM

SCALE | WEIGHT
MATERIAL

D	SR10-0274-03	06 NOV 03	KV
C	SR10-0155-03	26 MAY 03	KV
B	SR10-0240-02	17 MAY 02	BC
A	SR10-0158-01	11.04.01	BC
REV.	CHANGE ORDER	DATE	APP.

DATE 11.04.01
NAME Colpaert B.
DEP. PD&E Com

TOLERANCE UNLESS SPECIFIED OTHERWISE

PART NAME
Pin Assembly Eurocard
Type W

PART NO.
V42254-B1✱✱✱-W9✱✱-✱-7626

SHT. -1- OF 1

Customer Drawing: C 1393648-2