THIS DRAWING IS UNPUBLISHED. RELEASED FOR PUBLICATION 20
© COPYRIGHT 20 BY - ALL RIGHTS RESERVED.

REVISIONS

P	LTR	DESCRIPTION	DATE	DWN	APVD
	B	REV PER ECO 14-010790	7-17-14	CT	DH

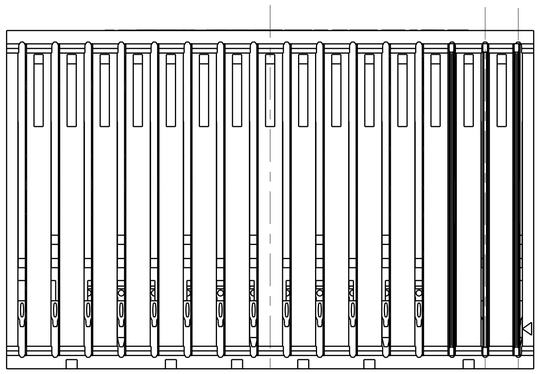

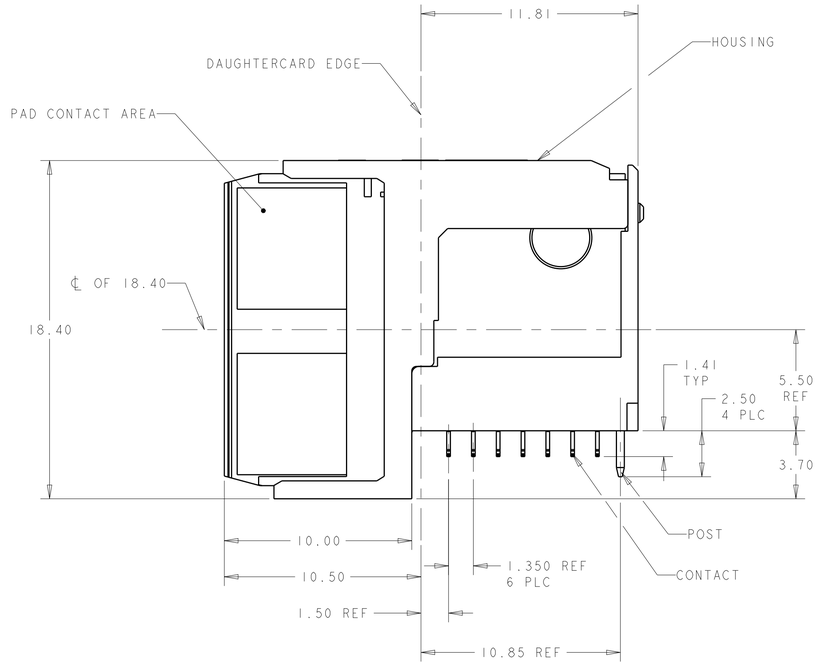

1. HOUSING: LCP, UL94V0, COLOR: BLACK.
   CONTACT: PHOSPHOR BRONZE.
   POST: BRASS WIRE
2. MANUFACTURING TOLERANCE FOR Ø0.46± 0.05
   DIAMETER FINISHED HOLE WITH Sn /PB PLATING:

   DRILLED HOLE = Ø0.55±0.02
   COPPER PLATING = 0.025-0.050
   Sn PB PLATING = 0.0038-0.0124
   OR
   MANUFACTURING TOLERANCE FOR Ø0.475± 0.05
   DIAMETER FINISHED HOLE WITHOUT Sn /PB PLATING:

   DRILLED HOLE = Ø0.55±0.02
   COPPER PLATING = 0.025-0.050
3. SEE TABLE I FOR INTERCONNECTIONS TO BACKPLANE CONNECTOR.
4. CONTACT: 0.76µm MIN GOLD IN PAD CONTACT AREA
   1.27µm MIN TIN ON PCB TAIL
   OVER 1.27µm MIN NICKEL OVER ALL.
   POST 1.27µm MIN NICKEL PLATED.
5. CONTACT: 1.27µm MIN GOLD IN PAD CONTACT AREA
   1.27µm MIN TIN-LEAD ON PCB TAIL
   OVER 1.27µm MIN NICKEL OVER ALL.
   POST 1.27µm MIN NICKEL PLATED.
6. CONTACT: 1.27µm MIN GOLD IN PAD CONTACT AREA
   1.27µm MIN TIN ON PCB TAIL
   OVER 1.27µm MIN NICKEL OVER ALL.
   POST 1.27µm MIN NICKEL PLATED.

TABLE I

INTERCONNECTIONS WITH BACKPLANE CONNECTOR 1410326

TYPICAL INTERCONNECTIONS FOR COLUMN (WAFER): 7,9,11,13,15		
CONTACT USAGE	DAUGHTERCARD CONNECTOR PIN	BACKPLANE CONNECTOR PIN
SIGNAL PAIR	ax	ax
	bx	bx
SIGNAL PAIR	dx	ex
	ex	fx
SIGNAL	gx	ix
GROUNDS	cx, fx, (ALL COMMONED)	cx, dx, gx, hx

TYPICAL INTERCONNECTIONS FOR COLUMN (WAFER): 8,10,12,14,16		
CONTACT USAGE	DAUGHTERCARD CONNECTOR PIN	BACKPLANE CONNECTOR PIN
SIGNAL PAIR	bx	cx
	cx	dx
SIGNAL PAIR	ex	gx
	fx	hx
GROUNDS	ax, dx, gx (ALL COMMONED)	ax, bx, ex, fx, ix

TYPICAL INTERCONNECTIONS FOR COLUMN (WAFER): 4, 5, 6		
CONTACT USAGE	DAUGHTERCARD CONNECTOR PIN	BACKPLANE CONNECTOR PIN
SIGNAL	ax	bx
SIGNAL	bx	cx
SIGNAL	dx	ex
SIGNAL	fx	gx
SIGNAL	gx	hx
GROUNDS	cx, ex (ALL COMMONED)	ax, dx, fx, ix

TYPICAL INTERCONNECTIONS FOR COLUMN (WAFER): 1, 2, 3		
CONTACT USAGE	DAUGHTERCARD CONNECTOR PIN	BACKPLANE CONNECTOR PIN
POWER	ax, bx, cx	ax, bx, cx, dx
POWER	ex, fx, gx	fx, gx, hx, ix
NOT CONNECTED	dx	ex

NOTE: "x" DESIGNATES THE COLUMN NUMBER

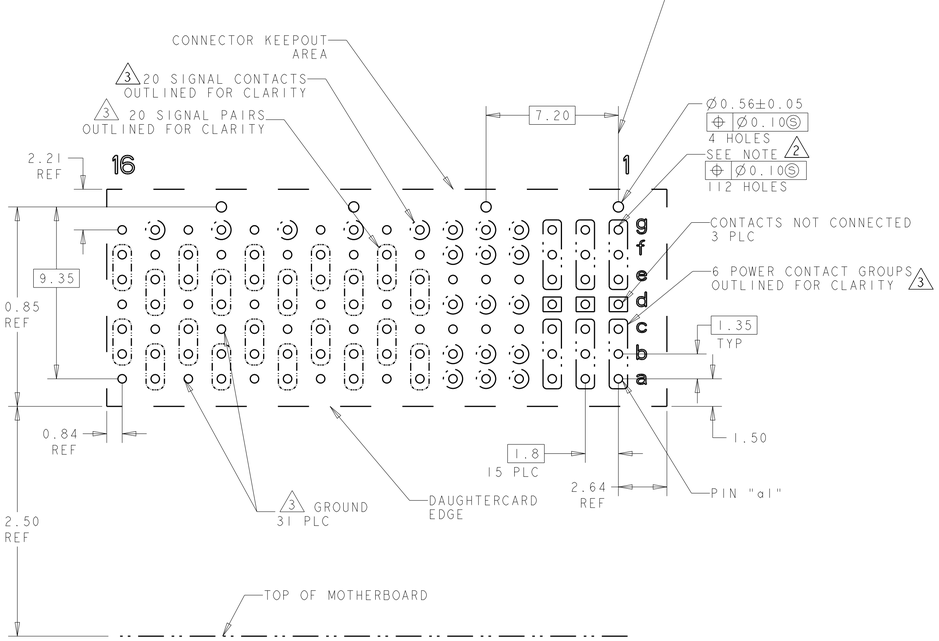

PC BOARD LAYOUT
(CONNECTOR SIDE)
SCALE 6:1

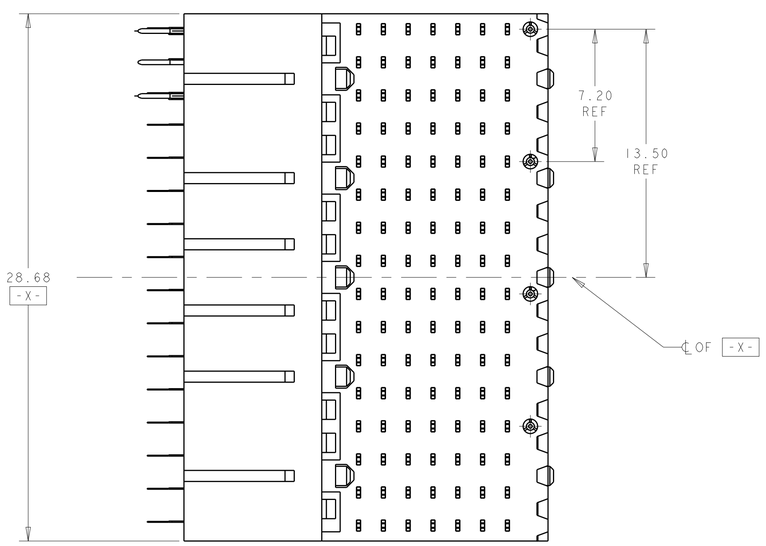

6	1410326-4
5	1410326-3
PLATING	PART NO

THIS DRAWING IS A CONTROLLED DOCUMENT.

DIMENSIONS: mm

TOLERANCES UNLESS OTHERWISE SPECIFIED:
0 PLC ±-
1 PLC ±0.5
2 PLC ±0.13
3 PLC ±-
4 PLC ±-
ANGLES ±1°0'

MATERIAL 1
FINISH 5

DWN D. HUMBERT 23JUN2009
CHK R. PATTERSON 23JUN2009
APVD R. PATTERSON 23JUN2009
PRODUCT SPEC 108-2072
APPLICATION SPEC 114-13056
WEIGHT -

TE Connectivity

NAME RIGHT-ANGLE PLUG ASSY,7 ROW,20.3mm MULTI-GIG RTS,DIFFERENTIAL,SIGNAL-ENDED AND POWER,CENTER CONN.

SIZE A1 | CAGE CODE - | DRAWING NO C-1410326 | RESTRICTED TO -

CUSTOMER DRAWING | SCALE 6:1 | SHEET 1 OF 1 | REV B

4805 (3/13)