THIS DRAWING IS UNPUBLISHED. RELEASED FOR PUBLICATION 26
© COPYRIGHT 26 BY TYCO ELECTRONICS CORPORATION. ALL RIGHTS RESERVED.

LOC	PLOT
AD	00

REVISIONS

P	LTR	DESCRIPTION	DATE	DWN	APVD
	A	EC 0512-0341-04	25JUL2004	DW	GG

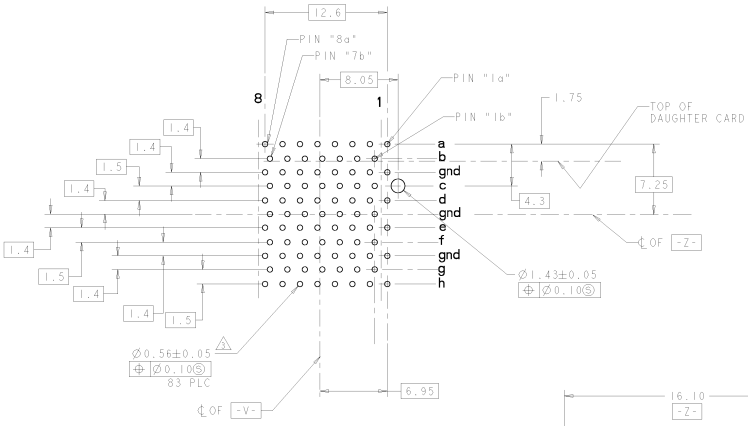

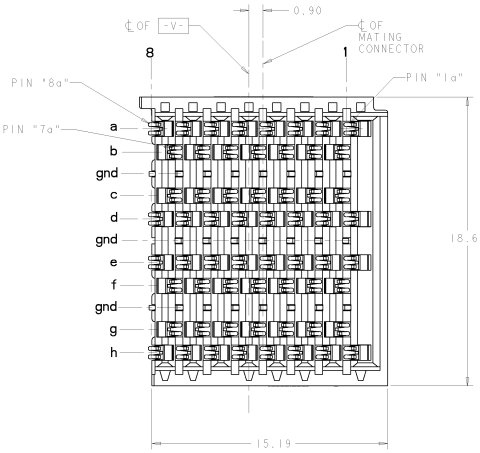

PC BOARD FOOTPRINT
VIEWED FROM CONNECTOR SIDE
SCALE 5:1

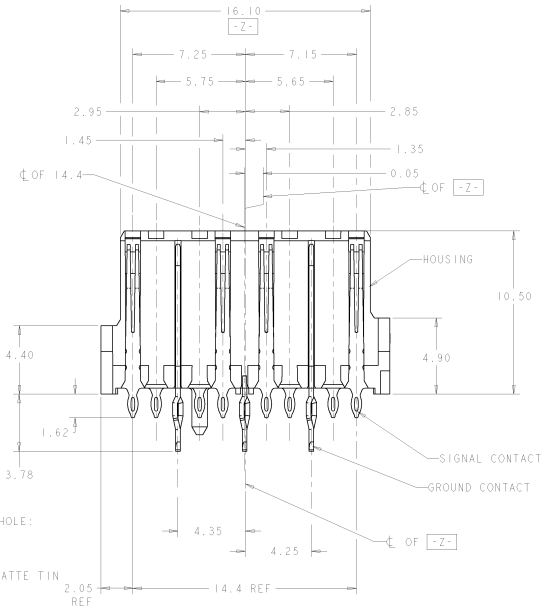

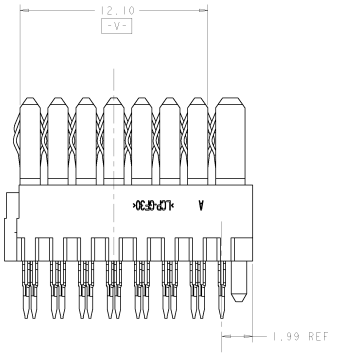

1. HOUSING; LCP, UL94V-0, BLACK.
   CONTACT: PHOSPHOR BRONZE.
2. 1.27µm GOLD PER ASTM B 488 IN CONTACT AREA, 1.27µm MIN TIN-LEAD ON PCB TAIL, OVER 1.27µm MIN NICKEL PER SAE AMS-QQ-N-290 OVER ALL.
3. MANUFACTURING TOLERANCE FOR Ø0.56 ±0.05 DIAMETER FINISHED HOLE:
   DRILLED HOLE: Ø0.65 ±0.02
   COPPER PLATING: 0.050 - 0.025
   TIN-LEAD PLATING: 0.0124 - 0.0038.
4. 1.27 µm GOLD PER ASTM B 488 IN CONTACT AREA , 1.27 µm MIN MATTE TIN PER ASTM B 545 ON PCB TAIL, OVER 3.81 µm MIN NICKEL PER SAE AMS-QQ-N-290 OVER ALL.
5. MANUFACTURING TOLERANCE FOR A Ø 0.575 ±0.045 FINISHED HOLE WITHOUT TIN LEAD PLATING:
   DRILLED HOLE: Ø0.65 ±0.02
   COPPER PLATING: 0.025 - 0.050

4	5	1410226-2
2	3	1410226-1
CONTACT TAIL/ HOLE FINISH		PART NO

THIS DRAWING IS CONSIDERED THE PROPRIETARY INFORMATION OF TYCO ELECTRONICS CORPORATION AND SHALL NOT BE REPRODUCED OR DISCLOSED WITHOUT WRITTEN AUTHORIZATION FOR THIRD PARTIES.

DIMENSIONS: MM
TOLERANCES UNLESS OTHERWISE SPECIFIED:
0 PLC ±-
1 PLC ±0.5
2 PLC ±0.13
3 PLC ±-
4 PLC ±-
ANGLES ±2°
MATERIAL -
FINISH -

DWN: DW 01OCT2001
CHK: VAN SCYOC 01OCT2001
APR: REISER 01OCT2001
QCA: D DEFIBAUGH 01OCT2001
PRODUCT SPEC: 108-2072
APPLICATION SPEC: 114-13054
WEIGHT: -
CUSTOMER DRAWING

tyco Electronics
Tyco Electronics
Harrisburg, PA 17105-3608

NAME: VERTICAL RECEPTACLE ASSEMBLY, LEFT END, HALF, 20.3 mm, TIER-1, BACKPLANE CONNECTOR

SIZE A | CAGE CODE | DRAWING NO 00779 C-1410226 | RESTRICTED TO -

SCALE 8:1 | SHEET 1 OF 1 | REV A

AMP 4005 REV 31MAR2000
Pro/ENGINEER DRAWING

Downloaded from Elcodis.com electronic components distributor