NOTES:

1. MATERIALS AND FINISHES:

   BODY - BeCu, SILVER PLATING (.000200 MIN THICK)
   CONTACT - BeCu, GOLD PLATING (.000050 MIN THICK)
   HEX NUT - BRASS, SILVER PLATING (.000200 MIN THICK)
   LOCKWASHER - PHOS BRONZE, SILVER PLATING (.000200 MIN THICK)
   GASKET - SILICONE
   INSULATOR - PTFE

2. ELECTRICAL:

   A. IMPEDANCE: 50 OHM
   B. DIELECTRIC WITHSTANDING VOLTAGE: 1500 VRMS, MIN.

3. MECHANICAL:

   A. DURABILITY: 500 CYCLES MIN.

4. PACKAGING:

   A. QUANTITY: SINGLE PACK
   B. MARKING: BAG TO BE MARKED
      "AMPHENOL, 31-4237-1000, AND DATE CODE"

31-4237-1000	REVISIONS				
DRAWING NO.	REV	DESCRIPTION	DATE	ECO	APPR
THIRD ANGLE PROJ.	A	RELEASE TO MFG.	8/28/03	44608	

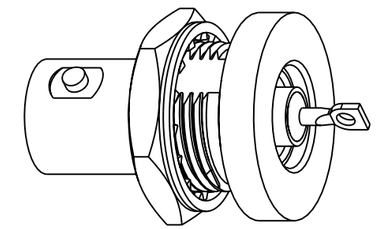

SCALE 2.000

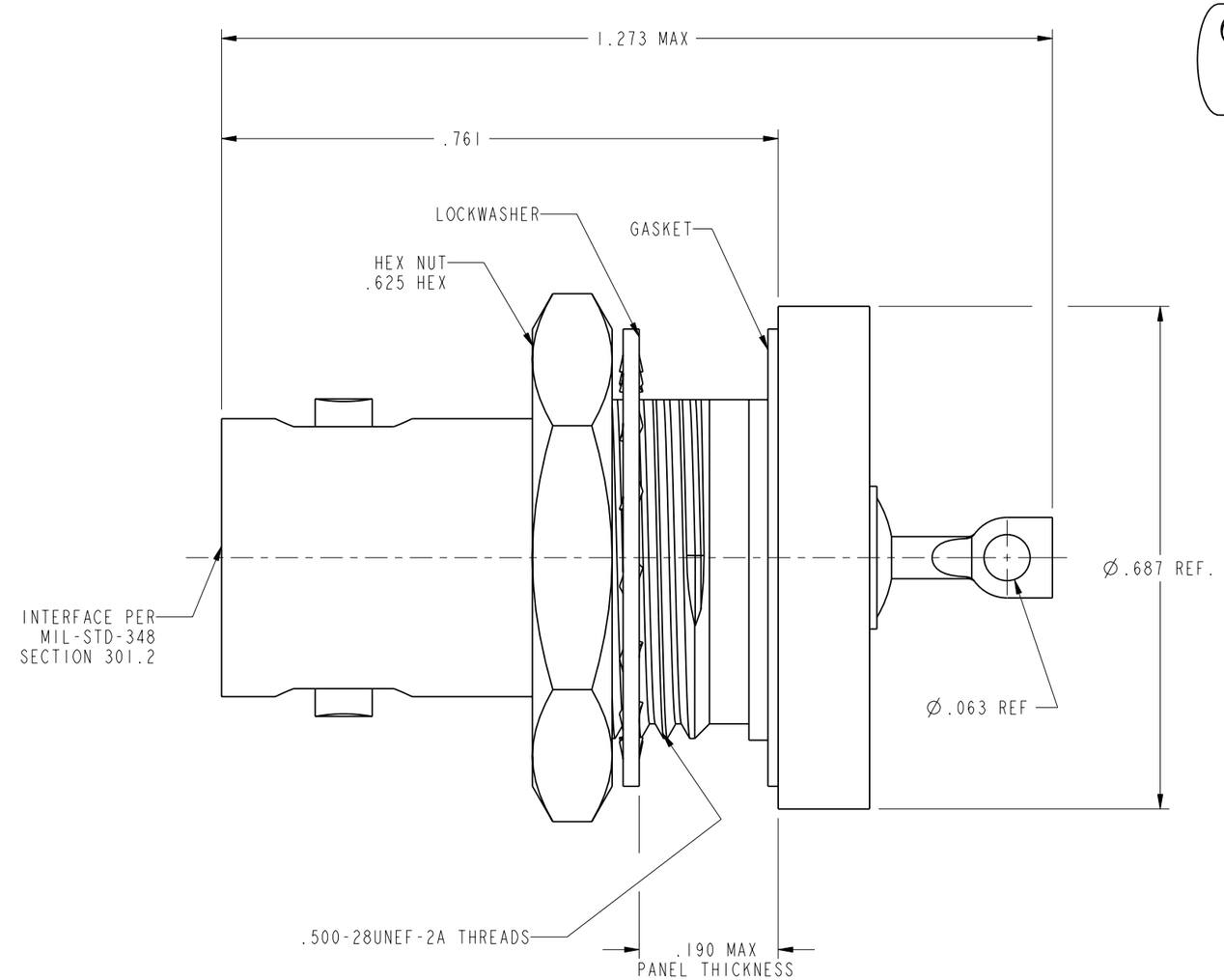

RECOMMENDED MOUNTING HOLE DIMENSIONS

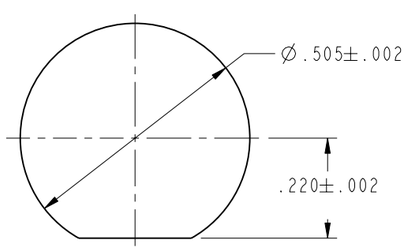

SCALE 3.000

CUSTOMER OUTLINE DRAWING

ALL OTHER SHEETS ARE FOR INTERNAL USE ONLY

UNLESS OTHERWISE SPECIFIED, DIMENSIONS ARE IN INCHES AND TOLERANCES ARE:
2 PLACE DECIMAL ±.015 (0,381 mm) | 3 PLACE DECIMAL ±.005 (0,127 mm) | ANGLES ± 1°

NOTICE - These drawings, specifications, or other data (1) are, and remain the property of Amphenol Corp. (2) must be returned upon request; and (3) are confidential and not to be disclosed to any person other than those to whom they are given by Amphenol Corp. The furnishing of these drawings, specifications, or other data by Amphenol Corp., or to any other person to anyone for any purpose is not to be regarded by implication or otherwise in any manner licensing, granting rights or permitting such holder or any other person to manufacture, use or sell any product, process or design, patented or otherwise, that may in any way be related to or disclosed by said drawings, specifications, or other data.

MATERIAL

REFERENCE
EAR #1071
REF: 31-4237
ASSYF20_BNC

DRAWN K. CAPOZZI	DATE 31-Jul-03	
ENGINEER K. CAPOZZI	DATE 31-Jul-03	
APPROVED O. BARTHELMES	DATE 8/28/03	
CAD FILE 31-4237-1000		

TITLE
BNC (F) REAR MOUNT HERMETIC RECEPTACLE W/ BeCu BODY

Amphenol RF
Danbury, CT, USA
Tainan, Taiwan
Shenzhen, China
www.amphenolrf.com

SCALE: 5.0:1 | SHEET 2 OF 2

CODE ID	DWG SIZE	DRAWING NO.	REV
74868	B	31-4237-1000	A

Mouser Electronics

Authorized Distributor

Click to View Pricing, Inventory, Delivery & Lifecycle Information:

Amphenol:
31-4237-1000