THIS DRAWING IS UNPUBLISHED. RELEASED FOR PUBLICATION 20
© COPYRIGHT 20 BY TYCO ELECTRONICS CORPORATION. ALL RIGHTS RESERVED.

PART NUMBER	REV	FIRST USED	POWER UNIT	FEED TYPE	DESCRIPTION
1852234-1	A	122500-1	LEADMAKER	AIR FEED	CUTS CARRIER
1852234-2	A	565435-5	BENCH MODEL K	AIR FEED	CUTS CARRIER
1852234-3	A	354500-1	BENCH MODEL G	AIR FEED	CUTS CARRIER
1852234-6	A	122500-1	LEADMAKER	AIR FEED	CONTINIOUS CARRIER
7-1852234-7	A	-	-	-	SPARE PARTS

1. RECOMMENDED SPARE PARTS
2. GREASE LIGHTLY
3. GUARD MUST BE IN PLACE WHEN OPERATING APPLICATOR IN A BENCH MACHINE

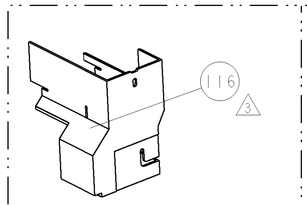

AMP-O-LECTRIC TERM GUARD

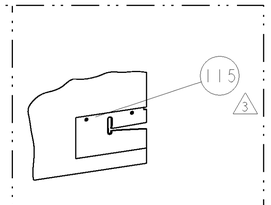

G TERMINATOR GUARD

TERMINAL NAME: TERMINAL

TYCO PN	MFG PN	LEAR TERMINAL - AMP CRIMP SPECS		
1949010	361830-YF-200			
-	-	PAD LTR	CRIMP HEIGHT	WIRE SIZE
-	-	A	.066±.002[1.68±0.05mm]	18 AWG
-	-	B	.061±.002[1.54±0.05mm]	20 AWG
-	-	C	-	-
-	-	D	-	-

CRIMP	SIZE	TYPE	RANGE
WIRE	.070 [1.78mm]	F	18-20 AWG
INSUL	.110 [2.79mm]	F	Ø.082 MAX

WIRE STRIP LENGTH	TERM APPL SPEC	FEED	APPL INSTRUCTIONS	SET UP GAGE
.184 -.199	NONE	.947	408-8040	458637-1

LOC	DIST
A	66

REVISIONS

P	LTR	DESCRIPTION	DATE	DWN	APVD
	A	RELEASED	27APR2006	LG	TE

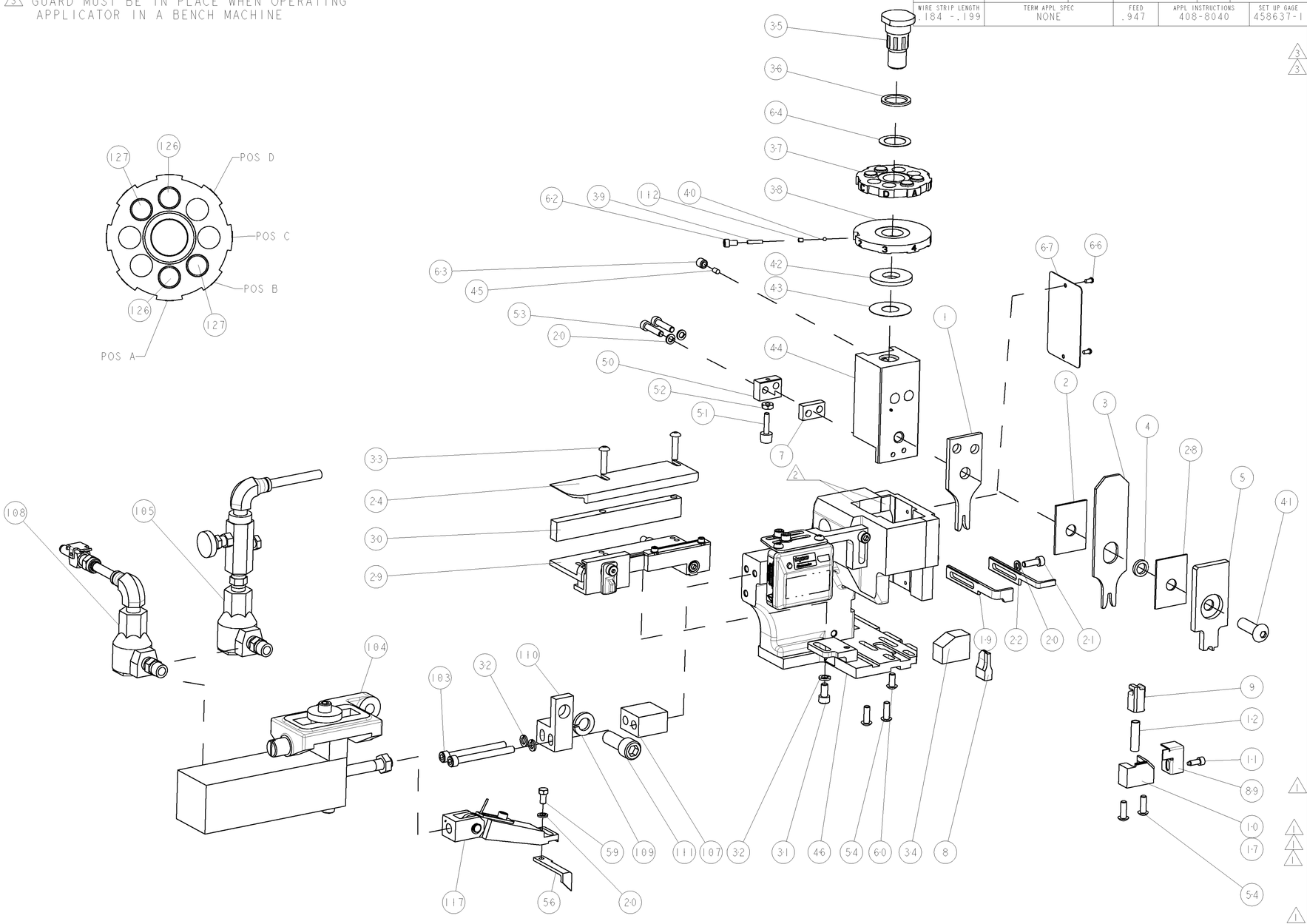

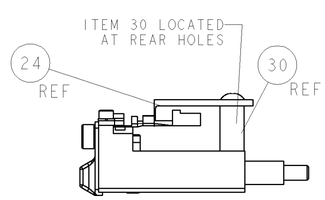

FEED TRACK POSITION

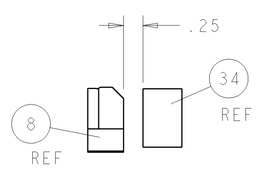

TERMINAL SUPPORT LOCATION

-77	-6	-3	-2	-1	U/M	PART NO	DESCRIPTION	ITEM NO
-	2	2	2	2	-	354779-9	PIN, WIRE DISC, .3035	127
-	2	2	2	2	-	9-354778-7	PIN, WIRE DISC, .2980	126
-	1	1	1	1	-	461062-1	ASSEMBLY, FEED FINGER	117
-	-	-	REF	-	..	455749-1	GUARD WINDOW	116
-	-	REF	-	-	..	679532-1	INSERT, GUARD	115
-	1	1	1	1	-	690603-1	SPRING ASSIST AMP-O-MATOR APPLICATOR	112
-	1	1	1	1	-	3-21001-5	SCR, SKT HD CAP 3/8-16 X 1.000	111
-	1	1	1	1	-	459610-1	MOUNT, FEED BRACKET	110
-	1	1	1	1	-	21024-8	WASHER, SPRG LOCK, REG 3/8	109
-	1	1	-	1	-	692655-7	AIR FEED VALVE ASSEMBLY	108
-	1	1	1	1	-	461690-1	SPACER, AIR FEED	107
-	-	-	1	-	-	692655-5	AIR FEED VALVE ASSEMBLY	105
-	1	1	1	1	-	461065-2	ASSEMBLY, AIR FEED	104
-	2	2	2	2	-	4-21000-3	SCR, SKT HD CAP 10-32 X 2.000	103
-	1	1	1	1	-	318563-1	GUARD, FRONT CHIP	89
-	1	1	1	1	-	4088040	SF APPL INST 408-8040	72
-	1	1	1	1	-	217238-1	GENERAL INSTRUCTION PKG	71
-	1	1	1	1	-	461264-1	PLATE, IDENTIFICATION	67
-	2	2	2	2	-	21017-2	SCREW, DRIVE	66
-	1	1	1	1	-	986950-1	WASHER, FLAT PRECISION	64
-	1	1	1	1	-	21009-2	SCR, SET, SELF LOCKING 1/4-20 X .250	63
-	1	1	1	1	-	23030-1	SCR, SKT HD CAP 6-32 x .25	62
-	1	1	1	1	-	22733-8	SCR, BHSC, SELF-LOCKING, 8-32 X .375	60
-	1	1	1	1	-	2-22603-0	SCR, HEX HD CAP 8-32 X .312	59
-	1	1	1	1	-	458537-2	PAWL, FEED	56
-	4	4	4	4	-	2-21002-2	SCR, BTN SKT HD CAP 8-32 X .500	54
-	2	2	2	2	-	2-21000-9	SCR, SKT HD CAP 8-32 X .750	53
-	1	1	1	1	-	21018-5	NUT, HEX, REG 6-32	52
-	1	1	1	1	-	811242-2	BUMPER, HOLD DOWN	51
-	1	1	1	1	-	690753-1	SPACER, TONKER	50
-	1	1	1	1	-	1633399-1	APPL., BASIC AIR FEED SUB ASSY	46
-	1	1	1	1	-	690191-1	PLUG,NYLON	45
-	1	1	1	1	-	455673-1	RAM, SIDE FEED	44
-	1	1	1	1	-	690125-1	SHIM SUB-ASSY	43
-	1	1	1	1	-	690124-1	WASHER, RAM (.115)	42
-	1	1	1	1	-	7-21002-9	SCR, BTN SKT HD CAP 5/16-24 X 1.00	41
-	1	1	1	1	-	23241-6	BALL, STEEL	40
-	1	1	1	1	-	690170-1	SPRING, COMPRESSION	39
-	1	1	1	1	-	690142-1	DISC, INSULATION	38
-	1	1	1	1	-	354777-1	WIRE DISC, ASSEMBLY	37
-	1	1	1	1	-	22480-5	SPRING, COMPRESSION	36
-	1	1	1	1	-	690212-1	POST, RAM	35
-	1	1	1	1	-	690786-6	TERMINAL SUPPORT	34
-	2	2	2	2	-	2-21002-4	SCR, BTN SKT HD CAP 8-32 X .750	33
-	3	3	3	3	-	21024-5	WASHER, SPRG LOCK, REG NO 10	32
-	1	1	1	1	-	3-21000-4	SCR, SKT HD CAP 10-32 X .375	31
-	1	1	1	1	-	1-1320908-0	SPACER, STRIP GUIDE	30
-	1	1	1	1	-	1633091-2	ASSEMBLY, STRIP GUIDE	29
-	1	1	1	1	-	1-455888-0	SPACER, CRIMPER	28
-	1	1	1	1	-	1320928-2	PLATE, STRIP GUIDE	24
-	1	-	-	1	-	690472-2	STRIPPER	22
-	1	1	1	1	-	2-21000-7	SCR, SKT HD CAP 8-32 X .500	21
-	4	4	4	4	-	21024-4	WASHER, SPRG LOCK, REG NO 8	20
-	-	1	1	-	-	691353-1	STRIPPER	19
-	1	-	-	-	-	679625-1	SHEAR HOLDER, FRONT (NO CUT)	17
-	1	1	1	1	-	3-22280-3	SPRING, COMPRESSION	12
-	1	1	1	1	-	690461-1	STOP, SHEAR	11
-	-	1	1	1	-	690459-1	SHEAR HOLDER, FRONT	10
-	1	1	1	1	-	1-454276-9	FLOATING SHEAR, FRONT	9
1	1	1	1	1	-	1633108-7	ANVIL, COMBINATION .070	8
-	1	1	1	1	-	3-240641-5	SPACER	7
-	1	1	1	1	-	1-455889-4	DEPRESSOR, SHEAR	5
-	1	1	1	1	-	238011-8	BLOCK, CRIMPER SPACER	4
1	1	1	1	1	-	8-456134-7	CRIMPER, INSULATION F PREMIUM	3
-	1	1	1	1	-	1-455888-3	SPACER, CRIMPER	2
1	1	1	1	1	-	456404-9	CRIMPER, WIRE PREMIUM	1

THIS DRAWING IS A CONTROLLED DOCUMENT FOR TYCO ELECTRONICS CORPORATION. IT IS SUBJECT TO CHANGE WITHOUT NOTICE. ANY ORGANIZATION OR ORGANIZATION SHOULD BE CONTACTED FOR THE LATEST REVISION.

DIMENSIONS: INCHES

TOLERANCES UNLESS OTHERWISE SPECIFIED:
0 PLC ±-
1 PLC ±0.1
2 PLC ±0.01
3 PLC ±0.001
4 PLC ±0.0001
ANGLES ±-

MATERIAL - -
FINISH - -

DWN	L GROSS	05APR2006
CHK	T ELBIN	05APR2006
APVD	T BENCHOFF	05APR2006

PRODUCT SPEC -
APPLICATION SPEC -
WEIGHT -

tyco Electronics — Tyco Electronics, Harrisburg, PA 17105-3608

NAME: SIDE FEED HDM APPLICATOR

SIZE	CAGE CODE	DRAWING NO	RESTRICTED TO
A1	00779	C-1852234	-

CUSTOMER DRAWING | SCALE 3:5 | SHEET 1 OF 1 | REV A

CUSTOMER VIEWABLE ASSEMBLY