THIS DRAWING IS UNPUBLISHED. RELEASED FOR PUBLICATION 20
© COPYRIGHT 20 BY TYCO ELECTRONICS CORPORATION. ALL RIGHTS RESERVED.

PART NUMBER	REV	FIRST USED	POWER UNIT	FEED TYPE	DESCRIPTION
1855501-1	A	122500-1	LEADMAKER	AIR FEED	CUTS CARRIER
1855501-2	A	565435-5	BENCH MODEL K	AIR FEED	CUTS CARRIER
1855501-3	A	354500-1	BENCH MODEL G	AIR FEED	CUTS CARRIER
7-1855501-7	A	-	-	-	SPARE PARTS

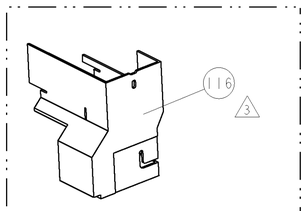

AMP-O-LECTRIC TERM GUARD

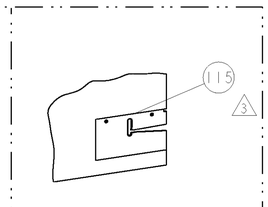

G TERMINATOR GUARD

TERMINAL NAME: TAXI TERM F M/P 280 BUS BAR

TE PN	MANUF PN	PACKARD TERMINAL-DELPHI CRIMP SPECS			
1949946	12110663				
-	-		CRIMP HEIGHT	WIRE SIZE	REF SETTING
-	-		1.65±0.05mm [.065±.002]	(2)1mm2	B0
-	-		1.60±0.05mm [.063±.002]	0.8mm2 & 1.0mm2	B5
-	-		1.50±0.05mm [.059±.002]	(2)0.8mm2	C4
-	-		-	-	-
-	-	CRIMP	SIZE	TYPE	RANGE
-	-	WIRE	3.30mm [.130]	F	(2)0.80-(2)1mm
-	-	INSUL	5.33mm [.210]	F	Ø1.90-2.70

WIRE STRIP LENGTH	TERM APPL SPEC	FEED	APPLICATOR INSTRUCTIONS	SET UP GAGE
5.22 -5.98	DELPHI	24.45	408-8040	458637-1

LOC	DIST
A	66

REVISIONS

P	LTR	DESCRIPTION	DATE	DWN	APVD
	1	PRELIMINARY	21APR2009	MEH	GB
	A	RELEASED	09JUN2009	MEH	GB

1. RECOMMENDED SPARE PARTS
2. GREASE LIGHTLY
3. GUARD MUST BE IN PLACE WHEN OPERATING APPLICATOR IN A BENCH MACHINE
4. CUT TO LENGTH AT ASSEMBLY

* WARNING
ON INSTALLATION, SET WIRE DISC TO LARGEST WIRE SIZE SETTING. USE OF SETTINGS BELOW MIN. REQUIRED CRIMP HEIGHT SETTING WILL CAUSE DAMAGE TO CRIMP TOOLING.

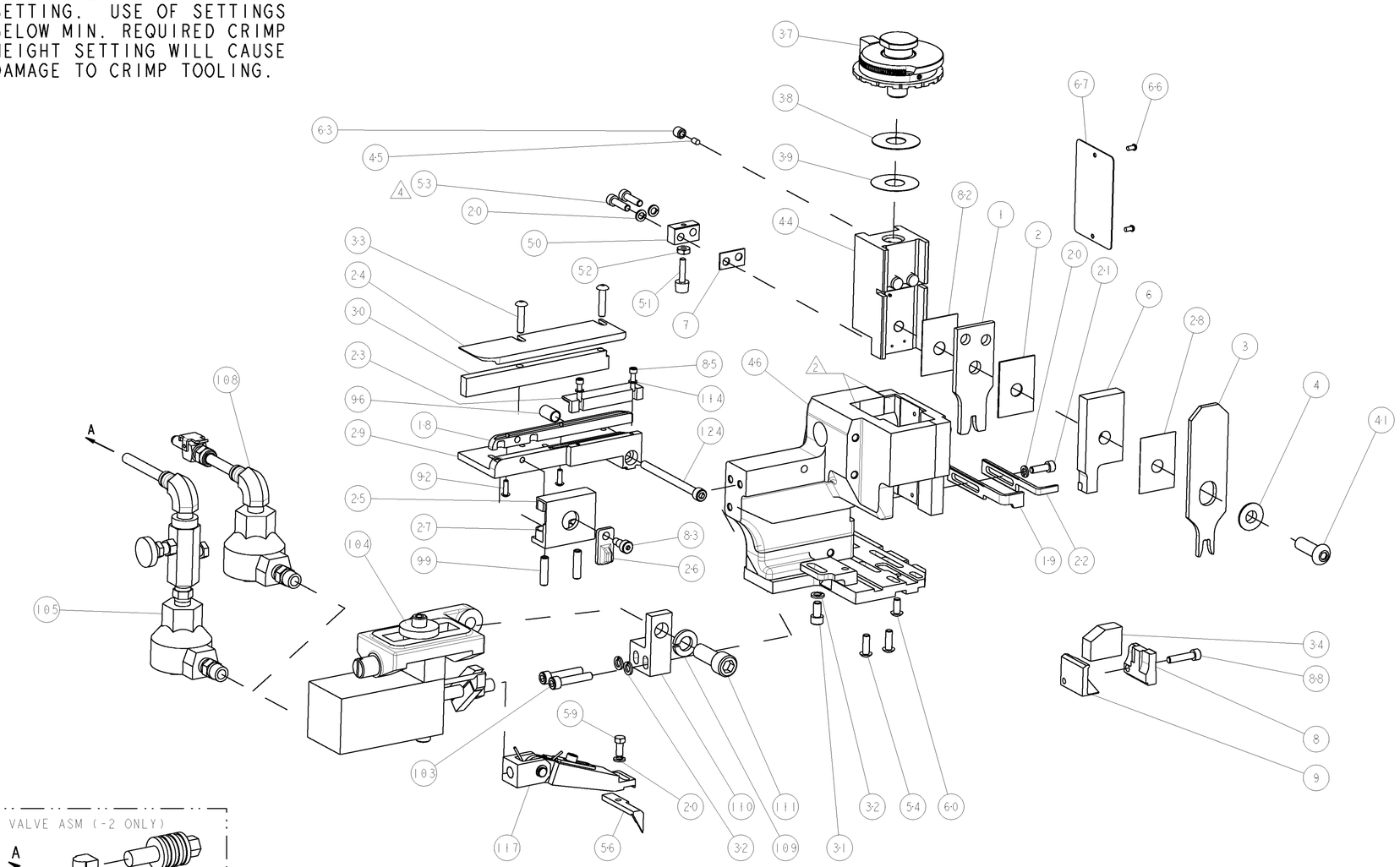

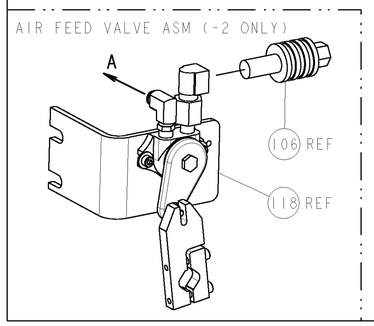

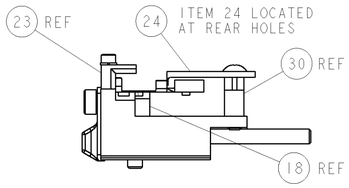

FEED TRACK AND FENCE POSITION

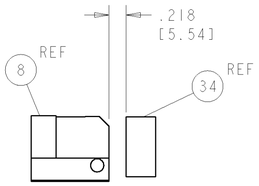

TERMINAL SUPPORT LOCATION

					PART NO	DESCRIPTION	ITEM NO
-	1	1	1	-	8-21000-7	SCR, SKT HD CAP 10-32 X 2.500	124
-	-	REF	-	-	692655-6	AIR FEED VALVE ASSEMBLY	118
-	1	1	1	-	461062-1	FEED FINGER ASSEMBLY	117
3 -	-	REF	-	..	455749-1	GUARD WINDOW	116
3 -	REF	-	-	..	679532-1	INSERT, GUARD	115
-	2	2	2	-	21024-2	WASHER, SPRG LOCK, REG NO 4	114
-	1	1	1	-	3-21001-5	SCR, SKT HD CAP 3/8-16 X 1.000	111
-	1	1	1	-	459610-1	MOUNT, FEED BRACKET	110
-	1	1	1	-	21024-8	WASHER, SPRG LOCK, REG 3/8	109
-	1	-	1	-	692655-7	AIR FEED VALVE ASSEMBLY	108
-	-	REF	-	-	24024-2	VALVE, SHUT OFF	106
-	-	1	-	-	692655-5	AIR FEED VALVE ASSEMBLY	105
-	1	1	1	-	461065-1	ASSEMBLY, AIR FEED	104
-	2	2	2	-	3-21000-9	SCR, SKT HD CAP 10-32 X 1.000	103
-	2	2	2	-	5-21006-6	SCR, SET, CUP POINT 10-32 X .750	99
-	1	1	1	-	1-22281-8	SPRING, COMPRESSION	96
-	2	2	2	-	1-21002-4	SCR, BTN SKT HD CAP 4-40 X .375	92
-	1	1	1	-	2-21000-9	SCR, SKT HD CAP 8-32 X .750	88
-	2	2	2	-	1-21000-5	SCR, SKT HD CAP 4-40 X .500	85
-	1	1	1	-	21989-8	SCR, SKT HD SHLDR 3/16 DIA X .250	83
-	1	1	1	-	455888-4	SPACER, CRIMPER	82
-	1	1	1	-	4088040	SF APPL INST 408-8040	72
-	1	1	1	-	217238-1	GENERAL INSTRUCTION PKG	71
-	1	1	1	-	461264-5	PLATE, IDENTIFICATION	67
-	2	2	2	-	21017-2	SCREW, DRIVE	66
-	1	1	1	-	21009-2	SCR, SET, SELF LOCKING 1/4-20 X .250	63
-	1	1	1	-	22733-8	SCR, BHSC, SELF-LOCKING, 8-32 X .375	60
-	1	1	1	-	2-22603-1	SCR, HEX HD CAP 8-32 X .375	59
-	1	1	1	-	2-694433-6	FEED PAWL	56
-	2	2	2	-	2-21002-2	SCR, BTN SKT HD CAP 8-32 X .500	54
4 -	2	2	2	-	2-21000-8	SCR, SKT HD CAP 8-32 X .625	53
-	1	1	1	-	21018-5	NUT, HEX, REG 6-32	52
-	1	1	1	-	811242-2	BUMPER, HOLD DOWN	51
-	1	1	1	-	690753-1	SPACER, TONKER	50
-	1	1	1	-	1633399-1	APPL., BASIC AIR FEED SUB ASSY	46
-	1	1	1	-	690191-1	PLUG,NYLON	45
-	1	1	1	-	2-819307-4	RAM, SIDE FEED	44
-	1	1	1	-	690686-1	CRIMPER, BOLT SPECIAL	41
-	1	1	1	-	690125-1	SHIM SUB-ASSY	39
-	1	1	1	-	469367-9	SHIM	38
-	1	1	1	-	879103-2	FINE ADJUST HEAD ASSEMBLY	37
-	1	1	1	-	690786-1	TERMINAL SUPPORT	34
-	2	2	2	-	2-21002-4	SCR, BTN SKT HD CAP 8-32 X .750	33
-	3	3	3	-	21024-5	WASHER, SPRG LOCK, REG NO 10	32
-	1	1	1	-	3-21000-4	SCR, SKT HD CAP 10-32 X .375	31
-	1	1	1	-	1320908-1	SPACER, STRIP GUIDE	30
-	1	1	1	-	1-1633087-8	PLATE, STRIP GUIDE	29
-	1	1	1	-	455888-2	SPACER, CRIMPER	28
-	2	2	2	-	1-22284-0	SPRING, COMPRESSION	27
-	1	1	1	-	356835-1	LEVER, DRAG RELEASE	26
-	1	1	1	-	690754-7	DRAG, SPECIAL	25
-	1	1	1	-	1-1320928-0	PLATE, STRIP GUIDE	24
-	1	1	1	-	1-690712-1	FRONT STRIP GUIDE	23
-	-	-	1	-	690472-2	STRIPPER	22
-	1	1	1	-	2-21000-7	SCR, SKT HD CAP 8-32 X .500	21
-	4	4	4	-	21024-4	WASHER, SPRG LOCK, REG NO 8	20
-	1	1	-	-	691353-1	STRIPPER	19
-	1	1	1	-	1-189807-6	FENCE	18
1 -	1	1	1	-	1752737-5	PLATE, REAR SHEAR	9
1 -	1	1	1	-	1214596-9	ANVIL, SPECIAL COMBINATION	8
-	1	1	1	-	1-240641-9	SPACER	7
1 -	1	1	1	-	1633790-1	BLADE, SLUG, SPECIAL	6
-	1	1	1	-	238009-1	BLOCK, FL CRIMPER SPACER	4
1 -	1	1	1	-	8-1213077-6	CRIMPER, INSULATION PREMIUM	3
-	1	1	1	-	455888-8	SPACER, CRIMPER	2
1 -	1	1	1	-	3-456410-4	CRIMPER, WIRE PREMIUM	1
	-77	-3	-2	-1	U/M		

THIS DRAWING IS CONTROLLED DOCUMENT FOR TYCO ELECTRONICS CORPORATION. IT IS SUBJECT TO CHANGE WITHOUT NOTICE. CUSTOMERS OR ORGANIZATION SHOULD BE CONTACTED FOR THE LATEST REVISION.

DWN	M HERR	21APR2009
CHK	G BAILEY	21APR2009
APVD	N DEMING	21APR2009

Tyco Electronics
Tyco Electronics
Harrisburg, PA 17105-3608

DIMENSIONS: INCHES

TOLERANCES UNLESS OTHERWISE SPECIFIED:
0 PLC ±-
1 PLC ±0.1
2 PLC ±0.01
3 PLC ±0.001
4 PLC ±0.0001
ANGLES ±-

MATERIAL - -
FINISH - -

PRODUCT SPEC -
APPLICATION SPEC -
WEIGHT -

NAME
FINE ADJUST SIDE FEED
HDM APPLICATOR
-

SIZE	CAGE CODE	DRAWING NO	RESTRICTED TO
A1	00779	C-1855501	-

CUSTOMER DRAWING | SCALE 3:5 | SHEET 1 OF 1 | REV A

CUSTOMER VIEWABLE ASSEMBLY

Mouser Electronics

Authorized Distributor

Click to View Pricing, Inventory, Delivery & Lifecycle Information:

TE Connectivity:

1855501-3