DRAWING MADE IN THIRD ANGLE PROJECTION

THIS DRAWING IS UNPUBLISHED. RELEASED FOR PUBLICATION .19

© COPYRIGHT 19 BY AMP INCORPORATED. ALL INTERNATIONAL RIGHTS RESERVED.

PART NO.	A (1)	B (3)	
863701-1	11.00 [279.4]	-	
863701-2	24.00 [609.6]	-	OBSOLETE
863701-3	6.50 [165.1]	.50 [12.7]	OBSOLETE
863701-4	9.00 [228.6]	-	OBSOLETE
863701-5	36.00 [914.4]	.38 [9.7]	
863701-6	30.00 [762.0]	-	OBSOLETE
863701-7	6.00 [152.4]	.38 [9.7]	OBSOLETE
863701-8	24.00 [609.6]	.38 [9.7]	
863701-9	20.00 [508.0]	.38 [9.7]	OBSOLETE
1-863701-0	18.00 [457.2]	.50 [12.7]	
1-863701-1	12.00 [304.8]	.38 [9.7]	
1-863701-2	3.50 [88.9]	.38 [9.7]	OBSOLETE
1-863701-3	48.00 [1219.2]	.38 [9.7]	
1-863701-4	120.00 [3048.0]	.38 [9.7]	OBSOLETE
1-863701-5	620.00 [15748.0]	.38 [9.7]	OBSOLETE
1-863701-6	96.00 [2438.4]	.38 [9.7]	OBSOLETE
1-863701-7	35.00 [889.0]	.50 [12.7]	OBSOLETE
1-863701-8	26.00 [660.4]	.38 [9.7]	OBSOLETE
1-863701-9	16.00 [406.4]	.38 [9.7]	
2-863701-0	25.00 [635.0]	.38 [9.7]	OBSOLETE
2-863701-1	28.00 [711.2]	.38 [9.7]	OBSOLETE
2-863701-2	12.00 [304.8]	.50 [12.7]	OBSOLETE
2-863701-3	27.00 [685.8]	.38 [9.7]	OBSOLETE
2-863701-4	180.00 [4572.0]	.38 [9.7]	OBSOLETE
2-863701-5	240.00 [6096.0]	.38 [9.7]	OBSOLETE
2-863701-6	72.00 [1828.8]	.38 [9.7]	
2-863701-7	48.00 [1219.2]	-	OBSOLETE
2-863701-8	9.50 [241.3]	.50 [12.7]	
2-863701-9	54.00 [1371.6]	.38 [9.7]	OBSOLETE
3-863701-0	15.00 [381.0]	.38 [9.7]	OBSOLETE
3-863701-1	72.00 [1828.8]	-	OBSOLETE
3-863701-2	22.00 [558.8]	.38 [9.7]	OBSOLETE
3-863701-3	9.00 [228.6]	.38 [9.7]	OBSOLETE
3-863701-4	4.50 [114.3]	.38 [9.7]	OBSOLETE
3-863701-5	15.43 [391.9]	.38 [9.7]	OBSOLETE
3-863701-6	11.00 [279.4]	.25 [6.3]	
3-863701-7	15.00 [381.0]	.25 [6.3]	OBSOLETE
3-863701-8	29.00 [736.6]	.38 [9.7]	OBSOLETE
3-863701-9	96.00 [2438.4]	.38 [9.7]	OBSOLETE
4-863701-0	73.00 [1854.2]	.38 [9.7]	OBSOLETE
4-863701-1	40.00 [1016.0]	.38 [9.7]	OBSOLETE
4-863701-2	60.00 [1524.0]	.38 [9.7]	OBSOLETE
4-863701-3	42.00 [1066.8]	.38 [9.7]	OBSOLETE
4-863701-4	4.00 [101.6]	.38 [9.7]	OBSOLETE
4-863701-5	10.00 [254.0]	.38 [9.7]	
4-863701-6	14.00 [355.6]	.38 [9.7]	OBSOLETE
4-863701-7	8.00 [203.2]	.38 [9.7]	OBSOLETE
4-863701-8	5.50 [139.7]	.38 [9.7]	OBSOLETE
4-863701-9	3.00 [76.2]	.38 [9.7]	OBSOLETE
5-863701-0	19.00 [482.6]	.38 [9.7]	OBSOLETE

PART NO.	A (1)	B (3)	
5-863701-1	15.75 [400.0]	-	OBSOLETE
5-863701-2	7.00 [177.8]	.38 [9.7]	OBSOLETE
5-863701-3	13.00 [330.2]	.38 [9.7]	OBSOLETE
5-863701-4	11.50 [292.1]	.38 [9.7]	OBSOLETE
5-863701-5	4.75 [120.6]	.38 [9.7]	OBSOLETE
5-863701-6	144.00 [3657.6]	.38 [9.7]	OBSOLETE
5-863701-7	50.00 [1270.0]	.38 [9.7]	OBSOLETE
5-863701-8	84.00 [2133.6]	.38 [9.7]	OBSOLETE
5-863701-9	5.25 [133.3]	.38 [9.7]	OBSOLETE
6-863701-0	80.00 [2032.0]	.38 [9.7]	OBSOLETE
6-863701-1	19.50 [495.3]	.38 [9.7]	OBSOLETE
6-863701-2	39.50 [1003.3]	.38 [9.7]	OBSOLETE
6-863701-3	12.50 [317.5]	.38 [9.7]	
6-863701-4	30.00 [762.0]	.38 [9.7]	
6-863701-5	12.00 [304.8]	.38 [9.7]	

PROD CODE	LOC	DIST			REVISIONS			
4092	DF	50	P	F	ZONE	LTR	DESCRIPTION	DATE	APPD
						E	ADD 6-5 & REDRAWN PER DF-3866 CT	11-90	

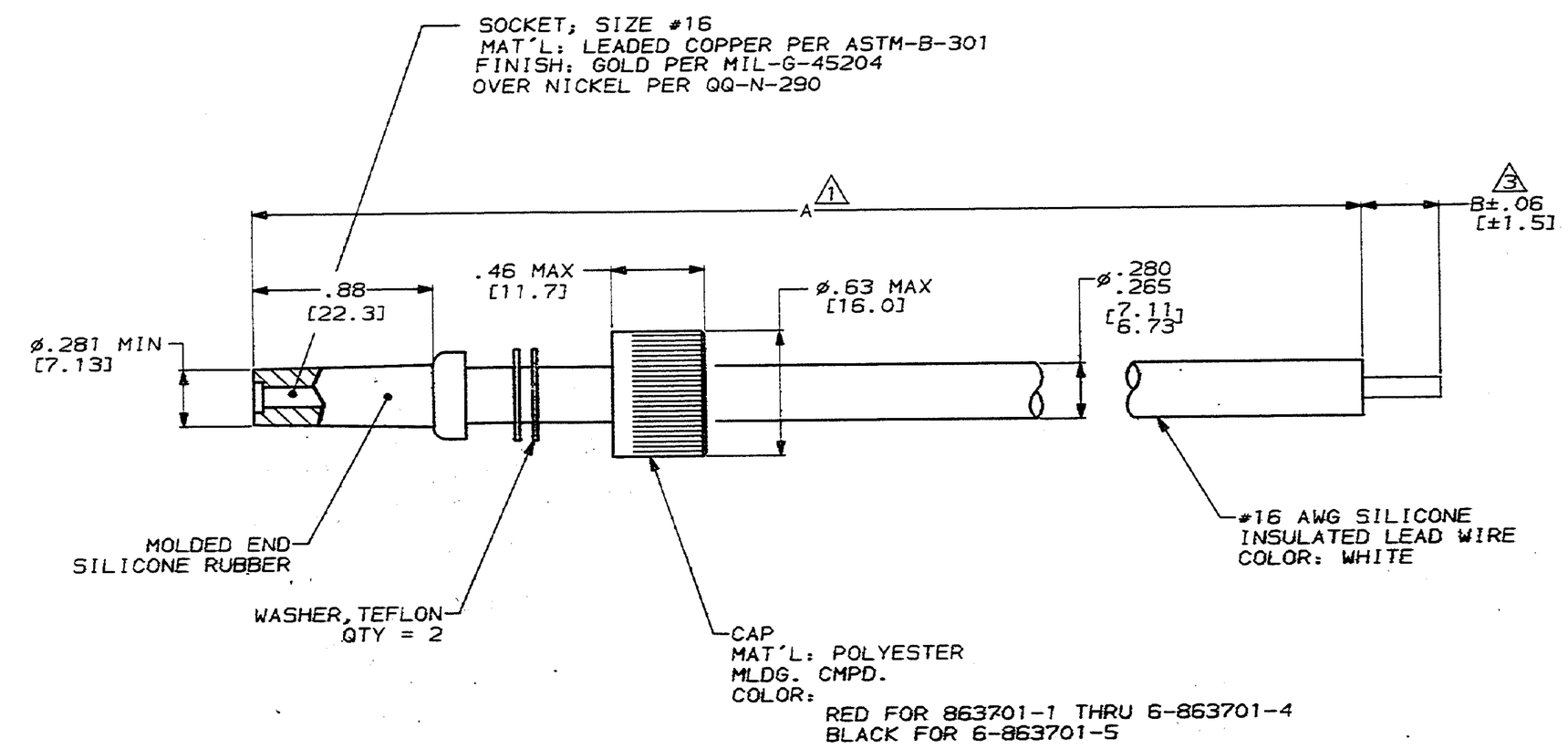

(1) TOLERANCE OF LEAD LENGTH:
UP TO 24 INCHES [609.6] = ±.12 [±3.0]
24 INCHES [609.6] & UP = ±1%

2. MARKED PER MIL-STD-130.

(3) PIGTAIL IS SOLDER DIPPED.

4. TO MATE WITH AMP LGH-1 RECEPTACLE WITH .88 BARREL DEPTH.

5. OPERATING VOLTAGE: 20 KVDC AT 0 TO 70,000 FEET, -55°C TO 125°C.

DO NOT SCALE PRINT. UNLESS SPECIFIED DIMENSIONS IN INCHES [mm] TOLERANCES ON : 2 PLC DEC ± .02 [0.5] 3 PLC DEC ± - ANGLES ± -	DR 11-2-90 C.C.THOMAS	AMP INCORPORATED Harrisburg, Pa. 17105
	CHK 11-6-90	
	APPD 11-6-90	NAME LEAD ASS'Y, LGH-1, SINGLE MOLDED END
MATERIAL SEE CALLOUTS	APPD 11/7/90	
	PRODUCT SPEC -	
FINISH -	APPLICATION SPEC -	SIZE D / CAGE CODE 00779 / DRAWING NO 863701
	WEIGHT -	SCALE 2:1 / SHEET 1 OF 1

CUSTOMER DRAWING

AMP 1756-3 REV 6-89

Mouser Electronics

Authorized Distributor

Click to View Pricing, Inventory, Delivery & Lifecycle Information:

TE Connectivity:

1-863701-0