THIS DRAWING IS UNPUBLISHED. RELEASED FOR PUBLICATION -,- .
© COPYRIGHT - BY TYCO ELECTRONICS CORPORATION. ALL RIGHTS RESERVED.

LOC	DIST
AD	00

REVISIONS

P	LTR	DESCRIPTION	DATE	DWN	APVD
	U	EC 0G3C 0012 05	16MAR05	BSV	JLG

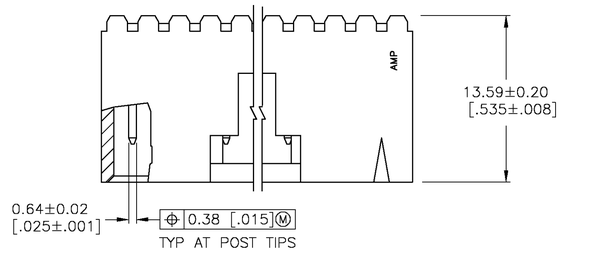

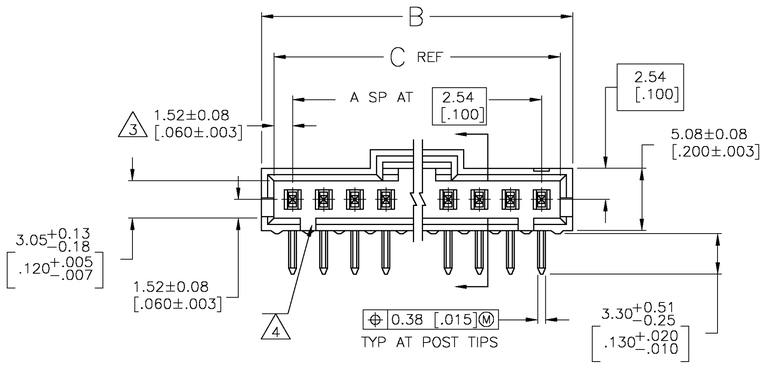

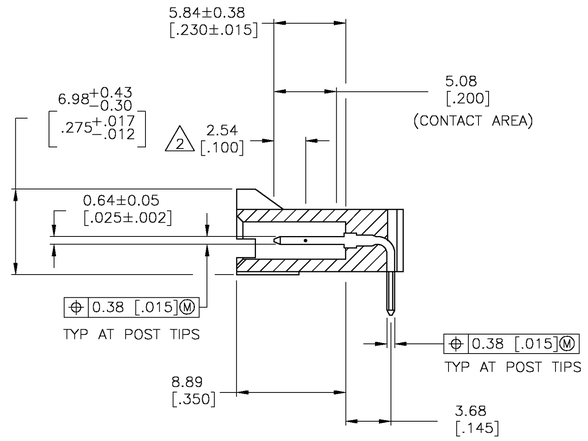

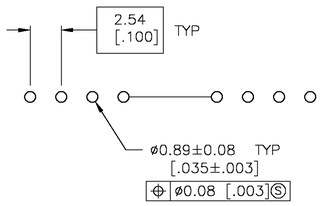

RECOMMENDED HOLE LAYOUT

1. .000100 BRIGHT TIN–LEAD OVER .000050 NICKEL.
2. POINT OF MEASUREMENT FOR PLATING THICKNESS.
3. THE NOTED DIMENSIONS APPLY AT THE INTERSECTION OF THE POST AND THE HOUSING.
4. ON ASSEMBLIES WITH FOUR OR MORE POSITIONS, TWO POLARIZATION SLOTS. ON ASSEMBLIES WITH TWO OR THREE POSITIONS, ONE POLARIZATION SLOT.
5. .000100 BRIGHT TIN OVER .000050 NICKEL.
6. PRELIMINARY PART – NOT RELEASED FOR PRODUCTION.
7. .000100 MATTE TIN OVER .000050 NICKEL.
8. HIGH TEMPERATURE CONFIGURATION

REMARKS	PLATING	C	B	A	NO. OF POSN	PART NO.
8	7	64.01 [2.520]	66.04 [2.600]	24	25	7-103634-4
8	7	61.47 [2.420]	63.50 [2.500]	23	24	7-103634-3
8	7	58.93 [2.320]	60.96 [2.400]	22	23	7-103634-2
8	7	56.39 [2.220]	58.42 [2.300]	21	22	7-103634-1
8	7	53.85 [2.120]	55.88 [2.200]	20	21	7-103634-0
8	7	51.31 [2.020]	53.34 [2.100]	19	20	6-103634-9
8	7	48.77 [1.920]	50.80 [2.000]	18	19	6-103634-8
8	7	46.23 [1.820]	48.26 [1.900]	17	18	6-103634-7
8	7	43.69 [1.720]	45.72 [1.800]	16	17	6-103634-6
8	7	41.15 [1.620]	43.18 [1.700]	15	16	6-103634-5
8	7	38.61 [1.520]	40.64 [1.600]	14	15	6-103634-4
8	7	36.07 [1.420]	38.10 [1.500]	13	14	6-103634-3
8	7	33.53 [1.320]	35.56 [1.400]	12	13	6-103634-2
8	7	30.99 [1.220]	33.02 [1.300]	11	12	6-103634-1
8	7	28.45 [1.120]	30.48 [1.200]	10	11	6-103634-0
8	7	25.91 [1.020]	27.94 [1.100]	9	10	5-103634-9
8	7	23.37 [.920]	25.40 [1.000]	8	9	5-103634-8
8	7	20.83 [.820]	22.86 [.900]	7	8	5-103634-7
8	7	18.29 [.720]	20.32 [.800]	6	7	5-103634-6
8	7	15.75 [.620]	17.78 [.700]	5	6	5-103634-5
8	7	13.21 [.520]	15.24 [.600]	4	5	5-103634-4
8	7	10.67 [.420]	12.70 [.500]	3	4	5-103634-3
8	7	8.13 [.320]	10.16 [.400]	2	3	5-103634-2
8	7	5.59 [.220]	7.62 [.300]	1	2	5-103634-1

PLATING	C	B	A	NO. OF POSN	PART NO.
5	30.99 [1.220]	33.02 [1.300]	11	12	3-103634-4
5	25.91 [1.020]	27.94 [1.100]	9	10	3-103634-3
6 5	23.37 [.920]	25.40 [1.000]	8	9	3-103634-2
5	18.29 [.720]	20.32 [.800]	6	7	3-103634-1
6 5	15.75 [.620]	17.78 [.700]	5	6	3-103634-0
5	5.59 [.220]	7.62 [.300]	1	2	2-103634-9
5	41.15 [1.620]	43.18 [1.700]	15	16	2-103634-8
5	13.21 [.520]	15.24 [.600]	4	5	2-103634-7
6 5	10.67 [.420]	12.70 [.500]	3	4	2-103634-6
5	8.13 [.320]	10.16 [.400]	2	3	2-103634-5
1	64.01 [2.520]	66.04 [2.600]	24	25	2-103634-4
1	61.47 [2.420]	63.50 [2.500]	23	24	2-103634-3
1	58.93 [2.320]	60.96 [2.400]	22	23	2-103634-2
1	56.39 [2.220]	58.42 [2.300]	21	22	2-103634-1
1	53.85 [2.120]	55.88 [2.200]	20	21	2-103634-0
1	51.31 [2.020]	53.34 [2.100]	19	20	1-103634-9
1	48.77 [1.920]	50.80 [2.000]	18	19	1-103634-8
1	46.23 [1.820]	48.26 [1.900]	17	18	1-103634-7
1	43.69 [1.720]	45.72 [1.800]	16	17	1-103634-6
1	41.15 [1.620]	43.18 [1.700]	15	16	1-103634-5
1	38.61 [1.520]	40.64 [1.600]	14	15	1-103634-4
1	36.07 [1.420]	38.10 [1.500]	13	14	1-103634-3
1	33.53 [1.320]	35.56 [1.400]	12	13	1-103634-2
1	30.99 [1.220]	33.02 [1.300]	11	12	1-103634-1
1	28.45 [1.120]	30.48 [1.200]	10	11	1-103634-0
1	25.91 [1.020]	27.94 [1.100]	9	10	103634-9
1	23.37 [.920]	25.40 [1.000]	8	9	103634-8
1	20.83 [.820]	22.86 [.900]	7	8	103634-7
1	18.29 [.720]	20.32 [.800]	6	7	103634-6
1	15.75 [.620]	17.78 [.700]	5	6	103634-5
1	13.21 [.520]	15.24 [.600]	4	5	103634-4
1	10.67 [.420]	12.70 [.500]	3	4	103634-3
1	8.13 [.320]	10.16 [.400]	2	3	103634-2
1	5.59 [.220]	7.62 [.300]	1	2	103634-1

THIS DRAWING IS A CONTROLLED DOCUMENT.

DIMENSIONS: mm [INCHES]

TOLERANCES UNLESS OTHERWISE SPECIFIED:
0 PLC ± –
1 PLC ± –
2 PLC ± –
3 PLC ± –
4 PLC ± –
ANGLES ± –

MATERIAL: HOUSING
FINISH: SEE TABLE

DWN S. SHUEY 3-5-91
CHK L.CASTAGNA 3-27-91
APVD L.CASTAGNA 3-27-91

PRODUCT SPEC 108-25034
APPLICATION SPEC 114-25026
WEIGHT –

tyco Electronics
Tyco Electronics Corporation
Harrisburg, Pa 17105-3608

NAME HEADER ASSEMBLY, RIGHT ANGLE, SINGLE ROW, 2.54 [.100] C/L 0.64 [.025] SQ POST, WITH PLZN & LATCHING, AMPMODU MTE

SIZE A1 | CAGE CODE 00779 | DRAWING NO C-103634 | RESTRICTED TO –

CUSTOMER DRAWING | SCALE 4:1 | SHEET 1 OF 1 | REV U