THIS DRAWING IS UNPUBLISHED. RELEASED FOR PUBLICATION .1997
© COPYRIGHT 1997 ALL RIGHTS RESERVED.

LOC	DIST
A1	

REVISIONS

P	LTR	DESCRIPTION	DATE	DWN	APVD
	B	ECR-15-015803	19APR2016	GCM	JB

PN 1-2.2-2.0-1.0-2.0-3.0-4 & 0-6

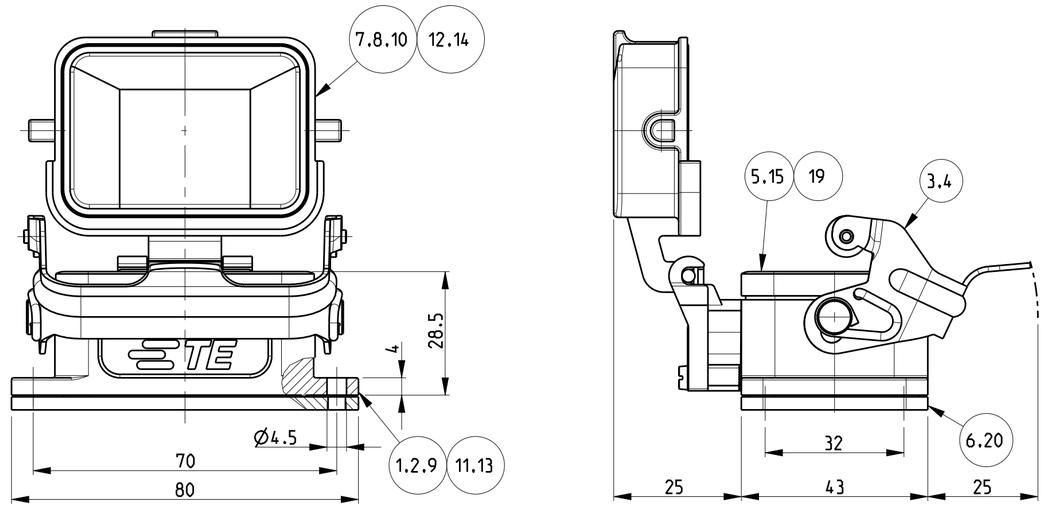

PN 0-5 (Without logo), 2-3 (With logo)

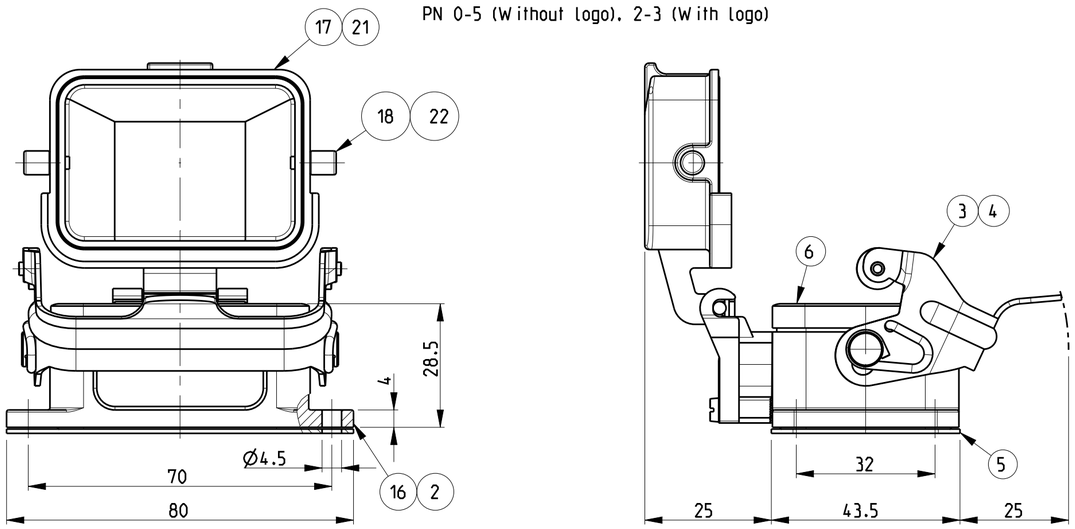

Panel cut-out

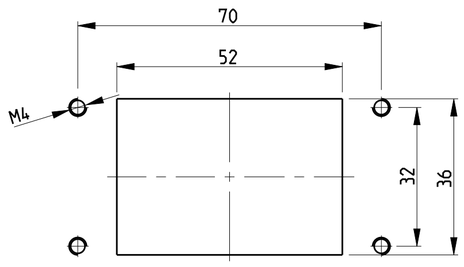

NOTES.

1 Material:Housing:Aluminium Diecasting Alloy
Seals :Neoprene: Viton

2 Surface: Varnish-Grey/fire-red /alu-colored
-Aluminium Oxide +
Varnish Black
ChromitAL TCP-Passivation

3 Varnish on the inside not necessary

4 Packaging
Quantity 5 Pieces in a box

5 Without TE product sign

6 Special Packaging
Quantity 50 Pieces in a Kanban box

PN 2-3

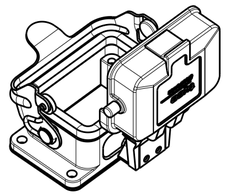

SCALE 1:2

PN 1-2.2-2.0-1.0-2.0-3.0-4 & 0-6

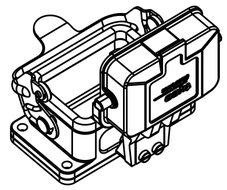

SCALE 1:2

PN 0-5

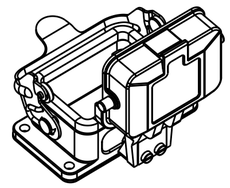

SCALE 1:2

2-3	0-6	0-5	0-4	0-3	0-2	0-1	2-2	1-2	DESCRIPTION	MATERIAL	SURFACE	COLOR	ITEM NO	NOTES
2									LB Clip bolt	Stainless steel			22	
1									Cover HB-K	Aluminium	Aluminium oxide	Black	21	
	1								Flange seal	Viton		Black	20	
	1								Profile seal	Viton		Grey	19	
		2							LB Clip bolt	Steel	Zinc plated	Blue	18	
		1							Cover HB	Aluminium		Grey	17	Without TE logo 5
		1							Surface mounted housing bottom entry HB	Aluminium		Grey	16	Without TE logo 5
			1						Profile seal	Neoprene		Black	15	Conductive
			1						Cover HB-EMV	Aluminium	SEE NOTE 2	Black	14	
			1						Surface mounted housing bottom entry HB-EMV	Aluminium	SEE NOTE 2	Black	13	
				1					Cover HB	Aluminium		Borning ried	12	
				1					Surface mounted housing bottom entry HB	Aluminium		Borning ried	11	
						1			Cover HB	Aluminium	Aluminium oxide	Alu-colored	10	
						1			Surface mounted housing bottom entry HB	Aluminium	Aluminium oxide	Alu-colored	9	
							1		Cover HB	Aluminium	Aluminium oxide	Black	8	
	1				1			1	Cover HB	Aluminium		Grey	7	
1		1	1	1	1	1	1	1	Flange seal	Neoprene		Black	6	
1		1		1	1	1	1	1	Profile seal	Neoprene		Black	5	
1						1	1		LB-Side clip HB	Stainless steel	Blank		4	
	1	1	1	1	1			1	LB-Side clip HB	Steel	Zinc plated	Blue	3	
1							1		Surface mounted housing bottom entry HB-K	Aluminium	Aluminium oxide	Black	2	
	1				1			1	Surface mounted housing bottom entry HB	Aluminium		Grey	1	

6	HB.6.AGD-LB
	HB-K.6.AGD-LB
	HB-K.6.AGD-LB
	HB.6.AGD-LB.KM
	HB.6.AGD-LB.KM
	HB-EMV.6.AGD-LB
	HB.6.AGD-LB
	HB.6.AGD-LB.V
	HB-K.6.AGD.LB

THIS DRAWING IS A CONTROLLED DOCUMENT.

DIMENSIONS: mm

TOLERANCES UNLESS OTHERWISE SPECIFIED: n.150 8075 n.150 2768-mK-E n.DIN 16901-120
0 PLC ±
1 PLC ±
2 PLC ±
3 PLC ±
4 PLC ±
ANGLES ±

MATERIAL

FINISH

DWN Schneider 23.09.1999
CHK Schweiger 23.09.1999
APVD –
PRODUCT SPEC 108-74001/74003
APPLICATION SPEC 114-74004/74005
WEIGHT

Customer Drawing

TE Connectivity

NAME Surface mounted housing bottom entry HB.6.AGD-LB

SIZE	CAGE CODE	DRAWING NO	RESTRICTED TO
A2	00779	C-1102246	-

SCALE 1:1 SHEET 1 OF 1 REV B

Mouser Electronics

Authorized Distributor

Click to View Pricing, Inventory, Delivery & Lifecycle Information:

TE Connectivity:

2-1102246-2