CKTS	DIM A	DIM B
2	.200/5.08	.100/2.54
3	.300/7.62	.200/5.08
4	.400/10.16	.300/7.62
5	.500/12.70	.400/10.16
6	.600/15.24	.500/12.70
7	.700/17.78	.600/15.24
8	.800/20.32	.700/17.78
9	.900/22.86	.800/20.32
10	1.000/25.40	.900/22.86
11	1.100/27.94	1.000/25.40
12	1.200/30.48	1.100/27.94
13	1.300/33.02	1.200/30.48
14	1.400/35.56	1.300/33.02
15	1.500/38.10	1.400/35.56
16	1.600/40.64	1.500/38.10
17	1.700/43.18	1.600/40.64
18	1.800/45.72	1.700/43.18
19	1.900/48.26	1.800/45.72
20	2.000/50.80	1.900/48.26
21	2.100/53.34	2.000/50.80
22	2.200/55.88	2.100/53.34
23	2.300/58.42	2.200/55.88
24	2.400/60.96	2.300/58.42
25	2.500/63.50	2.400/60.96
26	2.600/66.04	2.500/63.50
27	2.700/68.58	2.600/66.04
28	2.800/71.12	2.700/68.58
29	2.900/73.66	2.800/71.12
30	3.000/76.20	2.900/73.66
31	3.100/78.74	3.000/76.20
32	3.200/81.28	3.100/78.74
33	3.300/83.82	3.200/81.28
34	3.400/86.36	3.300/83.82
35	3.500/88.90	3.400/86.36
36	3.600/91.44	3.500/88.90

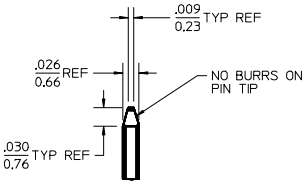

DETAIL X
SCALE 5:1
SEE NOTE 10

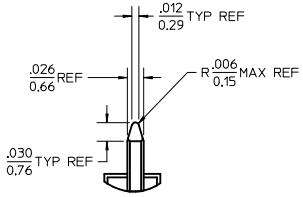

DETAIL Y
SCALE 5:1
SEE NOTE 10

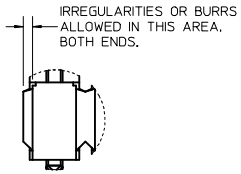

DETAIL Z
SCALE 5:1

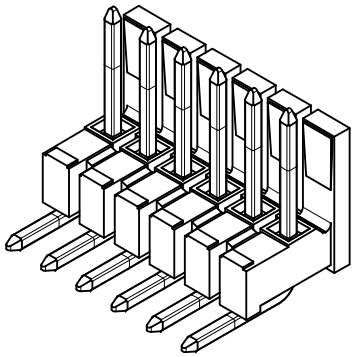

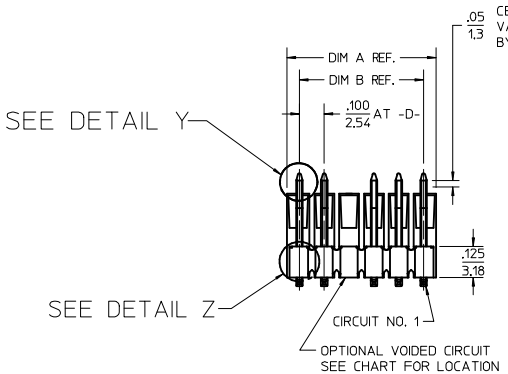

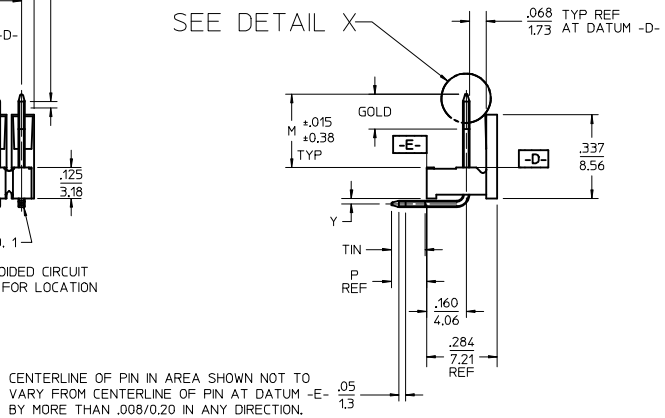

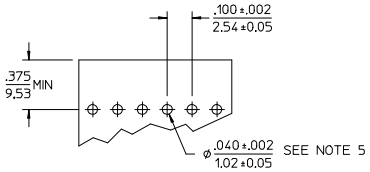

RECOMMENDED PC BOARD LAYOUT

NOTES:
1. MATERIAL: GLASS FILLED NYLON, 94V-0. COLOR: BLACK
2. FINISH:
   (154) OVERALL TIN: .000100/0.00254 MIN.
   OVER .000050/0.00127 MIN NICKEL.
   (208) SELECT GOLD: .000015/0.00038 MIN,
   SELECT TIN: .000100/0.00254 MIN.
   OVERALL NICKEL UNDERPLATE: .000050/0.00127 MIN.
   (228) SELECT GOLD: .000030/0.00076 MIN.
   SELECT TIN: .000100/0.00254 MIN.
   OVERALL NICKEL UNDERPLATE: .000050/0.00127 MIN.
3. PRODUCT SPECIFICATION: PS-10-07.
4. PACKAGING INFORMATION: SEE TABLES
5. KINK PIN OPTION NOT RECOMMENDED FOR 2 CIRCUIT PARTS. HOLE SIZE MAY NEED TO BE ADJUSTED ON 2 CIRCUIT PARTS WITH KINK OPTION FOR PROPER INSERTION INTO THE PCB. SEE SMES-42003 FOR ADDITIONAL INFORMATION ON KINK DIRECTION AND PLACEMENT.
6. HEADERS ARE NOT STACKABLE ON .100/2.54 CENTERS.
7. SOLDERABILITY PER SMES-152.
8. PIN PUSH OUT FORCE: 3 LBS. MIN.
9. PARTS CONFORM TO CLASS B REQUIREMENTS OF COSMETIC SPECIFICATION PS-45499-002.
10. PIN TIP DIMENSIONS ARE SHOWN FOR REFERENCE ONLY. DIMENSIONS APPLY PRIOR TO PLATING OR ASSEMBLY.

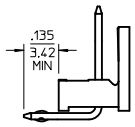

KINKED PIN OPTION
SEE NOTE 5

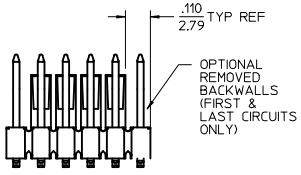

REMOVED BACKWALL OPTION

CORRECT PIN TIPS	DRWN:GAVERILL	2008/10/21	DESCRIPTION
EC NO: UCP2013-0900	CHKD:JBELL	2012/09/06	
	APPR:FSMITH	2012/10/09	
J5			REV

QUALITY SYMBOLS: E_A=0, E_C=0, E_P=0

GENERAL TOLERANCES (UNLESS SPECIFIED)

	mm	INCH
4 PLACES	± ---	± ---
3 PLACES	± ---	± .010
2 PLACES	± 0.25	± .014
1 PLACE	± 0.36	± ---
0 PLACE	±	±

ANGULAR ±1/2°
DRAFT WHERE APPLICABLE MUST REMAIN WITHIN DIMENSIONS

DIMENSION STYLE: IN/MM
SCALE: 2:1
DESIGN UNITS: INCH
THIRD ANGLE PROJECTION

DRAWN BY: JSCHAFER	DATE: 2003/09/23	TITLE: .100 POLARIZING BREAKAWAY HEADER ASSY OPPOSITE BEND
CHECKED BY: KSAMIEC	DATE: 2003/09/23	
APPROVED BY: MARGULIS	DATE: 2003/09/23	molex
MATERIAL NO.: SEE CHART	DOCUMENT NO.: SD-42624-001	SHEET NO.: 1 OF *
SIZE: B		

THIS DRAWING CONTAINS INFORMATION THAT IS PROPRIETARY TO MOLEX INCORPORATED AND SHOULD NOT BE USED WITHOUT WRITTEN PERMISSION