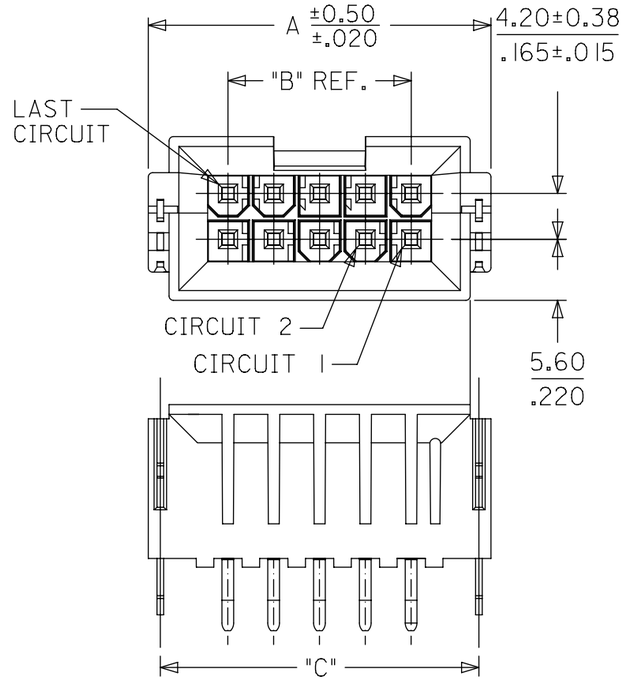

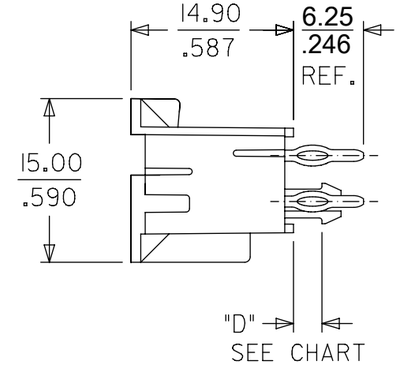

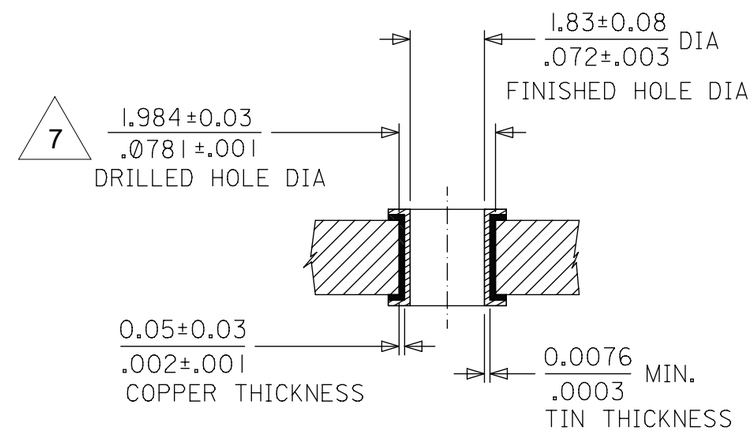

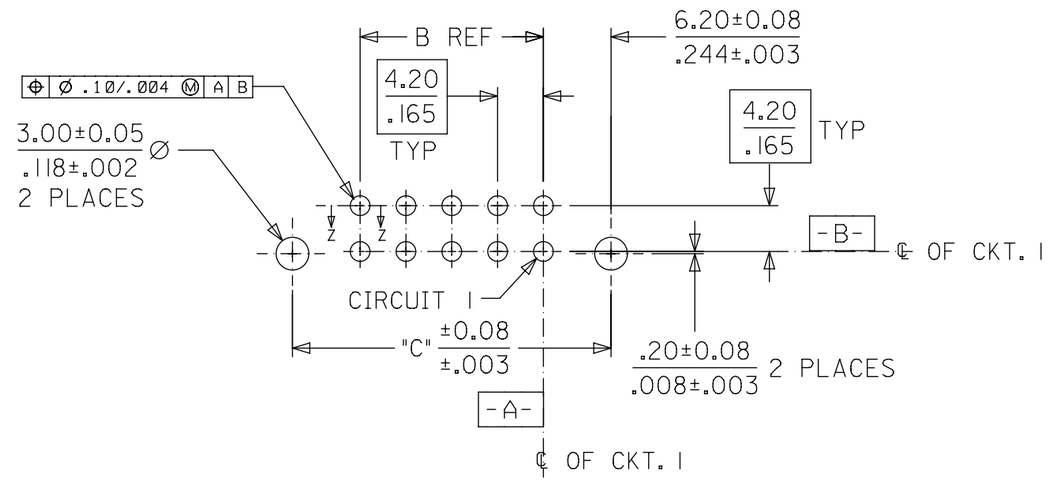

CKT NO.	DIM. "A"	DIM. "B"	DIM. "C"
4	18.81 / .740	4.20 / .165	16.60 / .653
6	23.01 / .906	8.40 / .331	20.80 / .819
8	27.21 / 1.071	12.60 / .496	25.00 / .984
10	31.41 / 1.237	16.80 / .661	29.20 / 1.150
12	35.61 / 1.402	21.00 / .827	33.40 / 1.315
14	39.81 / 1.567	25.20 / .992	37.60 / 1.480
16	44.01 / 1.733	29.40 / 1.157	41.80 / 1.646
18	48.21 / 1.898	33.60 / 1.323	46.00 / 1.811
20	52.41 / 2.063	37.80 / 1.488	50.20 / 1.976
22	56.61 / 2.229	42.00 / 1.654	54.40 / 2.142
24	60.81 / 2.394	46.20 / 1.819	58.60 / 2.307

NOTES:

1. MATERIAL: HOUSING: GLASS FILLED NYLON, UL94 V-0, BLACK
   TERMINAL: PHOSPHOR BRONZE
   BOARD RETENTION CLIP: BRASS
2. TERMINAL FINISH:
   1 = 0.00254/.000100 MIN. BRIGHT TIN OVER 0.00127/.000050 MIN. NICKEL OVERALL
   4 = 0.00076/.000030 MIN. GOLD IN CONTACT AREA, 0.00254/.000100 MIN. MATTE TIN IN TAIL AREA OVER 0.00127/.000050 MIN. NICKEL OVERALL
   CLIP FINISH: 0.00254/.000100 MIN. MATTE TIN OVER 0.00127/.000050 MIN. NICKEL OVERALL
3. PRODUCT SPECIFICATION: PS-43879-001
4. PARTS ARE TRAY PACKED PER PK-43879-001
5. THIS PART MATES WITH RECEPTACLE NUMBERS 5557 AND 42474 AND HEADER NUMBER 42385.
6. PART ALLOWS FOR 1.27/.050 MAX. MIS-ALIGNMENT WITH MATING HOUSING IN ANY DIRECTION.
7. DRILLED HOLE DIAMETER IS EQUIVALENT TO 5/64 STANDARD DRILL BIT.
8. CONNECTOR ASSEMBLIES ARE NOT DESIGNED TO BE MATED AND UNMATED WHILE CIRCUITS ARE LIVE.
9. PART IS NOT DESIGNED FOR CURRENT SHARING.
10. PART CONFORMS TO CLASS "B" REQUIREMENTS OF COSMETIC SPECIFICATION PS-45499-002.
11. THIS HEADER REQUIRES A MOLEX INSERTION TOOL (62200-9400) TO PROPERLY INSTALL IT TO THE PCB.

PCB LAYOUT: COMPONENT SIDE
RECOMMENDED PCB THICKNESS:
SEE CHART

PRE-RELEASE REFERENCE USE ONLY

RELEASE STATUS		RELEASE DATE	

QUALITY SYMBOLS: FA = 0; FC = 0; FD = 0; ▼ = 0; C = 0; ☒ = 0; ■ = 0; C = 0

THIS DRAWING CONTAINS INFORMATION THAT IS PROPRIETARY TO MOLEX ELECTRONIC TECHNOLOGIES, LLC AND SHOULD NOT BE USED WITHOUT WRITTEN PERMISSION

CHG DIM 5.82 TO 6.25 — EC NO: 104170 — DRWN: CSLAFTER — CHK'D: JBELL — APPR: — 2016/04/11 — 2016/05/10

REV: E1

GENERAL TOLERANCES (UNLESS SPECIFIED)	MM	INCH
4 PLACES	±	±
3 PLACES	±	± 0.01
2 PLACES	± 0.25	± 0.014
1 PLACES	± 0.35	±
0 PLACES	±	±
ANGULAR TOL ± 0.5		

DRAFT WHERE APPLICABLE MUST REMAIN WITHIN DIMENSIONS

DIMENSION UNITS: MM/IN — SCALE: 2:1

DRWN BY: POLGAR — DATE: 2003/04/06

CHK'D BY: MARGULIS — DATE: 2003/04/17

APPR BY: FSMITH — DATE: 2012/06/01

DRAWING SIZE: B — THIRD ANGLE PROJECTION

molex®

MINI-FIT JR
BMI/CPI HEADER ASSEMBLY W/ BOARD MOUNTING CLIPS

PRODUCT CUSTOMER DRAWING

SERIES	MATERIAL NUMBER	CUSTOMER
43879	SEE CHART	GENERAL MARKET

DOCUMENT NUMBER	DOC TYPE	DOC PART	SHEET NUMBER
SD-43879-051	PSD	000	1 OF 2

FINISH: NOTE 2	1 = TIN
DIM. D:	3.390.25 / .133.010
PCB THICKNESS:	3.18 / .125
CIRCUITS	MATERIAL NO.
04	43879-5000
06	43879-5001
08	
10	43879-5003
12	
14	43879-5005
16	
18	43879-5007
20	
22	
24	43879-5010

FINISH: NOTE 2	4 = GOLD & TIN
DIM. D:	3.390.25 / .133.010
PCB THICKNESS:	3.18 / .125
CIRCUITS	MATERIAL NO.
04	43879-5033
06	43879-5034
08	
10	43879-5036
12	
14	43879-5038
16	
18	43879-5040
20	
22	
24	43879-5043

PRE-RELEASE REFERENCE USE ONLY

QUALITY SYMBOLS
EA = 0
EC = 0
EP = 0
▼ = 0
C = 0
☒ = 0
■ = 0
E = 0

CHG DIM 5.82 TO 6.25
EC NO: 104170 2016/04/11
DRWN: CSLAFTER 2016/05/10
CHK'D: JBELL
APPR:
REV E1

THIS DRAWING CONTAINS INFORMATION THAT IS PROPRIETARY TO MOLEX ELECTRONIC TECHNOLOGIES, LLC AND SHOULD NOT BE USED WITHOUT WRITTEN PERMISSION

GENERAL TOLERANCES (UNLESS SPECIFIED)	MM	INCH
4 PLACES	±	±
3 PLACES	±	± 0.01
2 PLACES	± 0.25	± 0.014
1 PLACES	± 0.35	±
0 PLACES	±	±
ANGULAR TOL ± 0.5		
DRAFT WHERE APPLICABLE MUST REMAIN WITHIN DIMENSIONS		

DIMENSION UNITS: MM/IN
SCALE: 2:1
DRWN BY: POLGAR DATE: 2003/04/06
CHK'D BY: MARGULIS DATE: 2003/04/17
APPR BY: FSMITH DATE: 2012/06/01
DRAWING SIZE: B
THIRD ANGLE PROJECTION

molex®

MINI-FIT JR
BMI/CPI HEADER ASSEMBLY W/ BOARD MOUNTING CLIPS

PRODUCT CUSTOMER DRAWING

SERIES	MATERIAL NUMBER	CUSTOMER
43879	SEE CHART	GENERAL MARKET

DOCUMENT NUMBER	DOC TYPE	DOC PART	SHEET NUMBER
SD-43879-051	PSD	000	2 OF 2

RELEASE STATUS	RQ	RELEASE DATE	10.05.2016 20:13:06

FORMAT: Eng-lega-master-tb-prod-B
REVISION: C
DATE: 2016/04/04