THIS DRAWING IS UNPUBLISHED. RELEASED FOR PUBLICATION 1997
© COPYRIGHT 1997 - ALL RIGHTS RESERVED.

LOC	DIST
A1	-

REVISIONS

P	LTR	DESCRIPTION	DATE	DWN	APVD
	B13	Released As per ECR-09-005436	9-Mar-2009	CJ	TS
	B14	ECR-11-002636	05APR2011	SR	AR

PN 1-1.2-1.3-1.4-1.5-1.1-2.2-2.3-2
4-2.5-2.6-1.4-3.1-8.2-8.3-8.4-8.5-8.
4-9.2-9.3-9.4-9 & 5-9

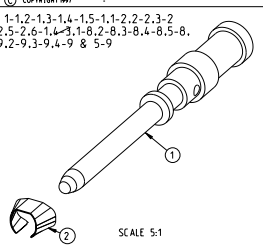

SCALE 5:1

PN 1-1.2-1.3-1.4-1.5-1.1-2.2-2.3-2
4-2.5-2.6-1.4-3.1-8.2-8.3-8.4-8.5-8.
4-9.2-9.3-9.4-9 & 5-9

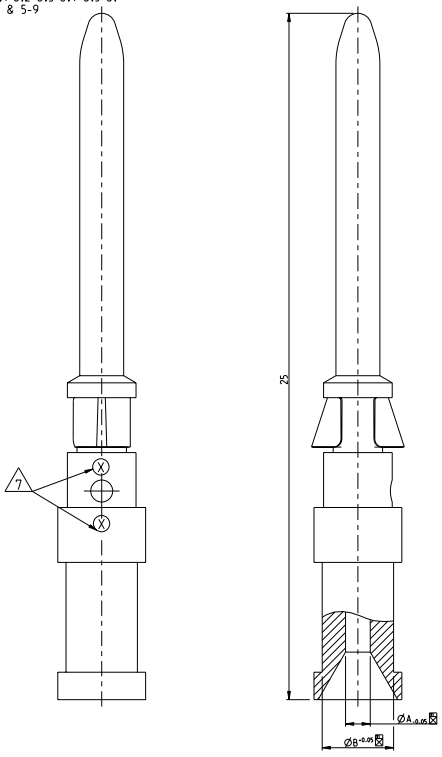

NOTES

1. MATERIAL SEE TABLE
2. SURFACE SEE TABLE
3. ASSEMBLY WEIGHT SEE TABLE
4. PACKAGING: 50 PIECES IN POLY-BAG 0-1243085-8
5. PACKAGING: 500 PIECES IN POLY-BAG 0-1243085-8
6. PACKAGING: 10 PIECES IN POLY-BAG 0-1243085-8
7. CROSS-SECTION MARKING

PN 1-1.2-1.3-1.4-1.5-1.1-2.2-2.3-2
4-2.5-2.6-1.4-3.1-8.2-8.3-8.4-8.5-8.
4-9.2-9.3-9.4-9 & 5-9

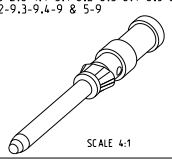

SCALE 4:1

	4-3	6-1	4-1	1-3	5-2	4-2	3-2	2-2	1-2	5-1	4-1	3-1	2-1	1-1	DESCRIPTION	WEIGHT IN (Kg)	MATERIAL	SURFACE	ØA	ØB	CROSS SECTION MARKING	POS
					5-9	4-9	3-9	2-9	1-9	5-8	4-8	3-8	2-8	1-8								
	HND-C-Si-Ag/Ni-1.5 mm²	HND-C-Si-Ag/Ni-4.0 mm²	HN.D-C-Si-CuNi-0.14 -0.37 mm²	HN.D-C-Si-Fe-Au-0.14 -0.37 mm²	HN.D-C-Si-Au-2.5 mm²	HN.D-C-Si-Au-1.5 mm²	HN.D-C-Si-Au-0.75-1.00 mm²	HN.D-C-Si-Au-0.5 mm²	HN.D-C-Si-Au-0.14 -0.37 mm²	HN.D-C-Si-Ag-2.5 mm²	HN.D-C-Si-Ag-1.5 mm²	HN.D-C-Si-Ag-0.75-1.00 mm²	HN.D-C-Si-Ag-0.5 mm²	HN.D-C-Si-Ag-0.14 -0.37 mm²								
	OBSOLETE	OBSOLETE	OBSOLETE																			
	1	1	1	1	1	1	1	1	1	1	1	1	1	1	Catch Spring		Stainless Steel					2
	1														Pin Contact 1.5 mm²	0.00062	Ms/Brass	Ag/Ni	1.8	3.0	4	1
		1													Pin Contact 4.0 mm²	0.00059	Ms/Brass	Ag/Ni	2.4	3.2	6	
					1										Pin Contact 2.5 mm²	0.00067	Ms/Brass	Au	2.2	3.2	5	
						1									Pin Contact 1.5 mm²	0.00067	Ms/Brass	Au	1.8	3.0	4	
							1								Pin Contact 0.75-10 mm²	0.00063	Ms/Brass	Au	1.45	2.6	3	
								1							Pin Contact 0.5 mm²	0.00062	Ms/Brass	Au	1.1	2.6	2	
									1						Pin Contact 0.14-0.37 mm²	0.00061	Ms/Brass	Au	0.9	2.6	1	
										1					Pin Contact 2.5 mm²	0.00065	Ms/Brass	Ag/Cu	2.2	3.2	5	
											1				Pin Contact 1.5 mm²	0.00067	Ms/Brass	Ag/Cu	1.8	3.0	4	
												1			Pin Contact 0.75-10 mm²	0.00063	Ms/Brass	Ag/Cu	1.45	2.6	3	
													1		Pin Contact 0.5 mm²	0.00062	Ms/Brass	Ag/Cu	1.1	2.6	2	
OBSOLETE			1												~~Pin Contact 0.14-0.37 mm²~~	~~0.00061~~	~~Ms/Brass~~		~~0.9~~	~~2.6~~	~~1~~	
OBSOLETE				1											~~Pin Contact 0.14-0.37 mm²~~	~~0.00065~~	~~Fe~~	~~Au~~	~~0.9~~	~~2.6~~	~~1~~	
														1	Pin Contact 0.14-0.37 mm²	0.00067	Ms/Brass	Ag/Cu	0.9	2.6	1	

THIS DRAWING IS A CONTROLLED DOCUMENT.

DIMENSIONS: mm

TOLERANCES UNLESS OTHERWISE SPECIFIED: ISO 2768 m-H
0 PLC
1 PLC
2 PLC
3 PLC
4 PLC
ANGLES ±1°

MATERIAL 1 -

FINISH 2 -

DWN	Braun	23.07.1997
CHK	Schnurpfeil	23.07.1997
APVD	-	
PRODUCT SPEC	108-74018	
APPLICATION SPEC	114-74015	
WEIGHT	-	

TE Connectivity

NAME: PIN CONTACT SERIES HN.D

SIZE	CAGE CODE	DRAWING NO	RESTRICTED TO
A2	00779	C-1105050	-

CUSTOMER DRAWING

SCALE 10:1 SHEET 1 OF 1 REV B14

1471-9 (3/11)

PROENGINEER DRAWING

Downloaded from Elcodis.com electronic components distributor