THIS DRAWING IS UNPUBLISHED. RELEASED FOR PUBLICATION - ,- .
© COPYRIGHT - BY TYCO ELECTRONICS CORPORATION. ALL RIGHTS RESERVED.

LOC	DIST
AD	00

REVISIONS

P	LTR	DESCRIPTION	DATE	DWN	APVD
	D	REVISED PER ECO-10-008084	26APR10	HMR	JG

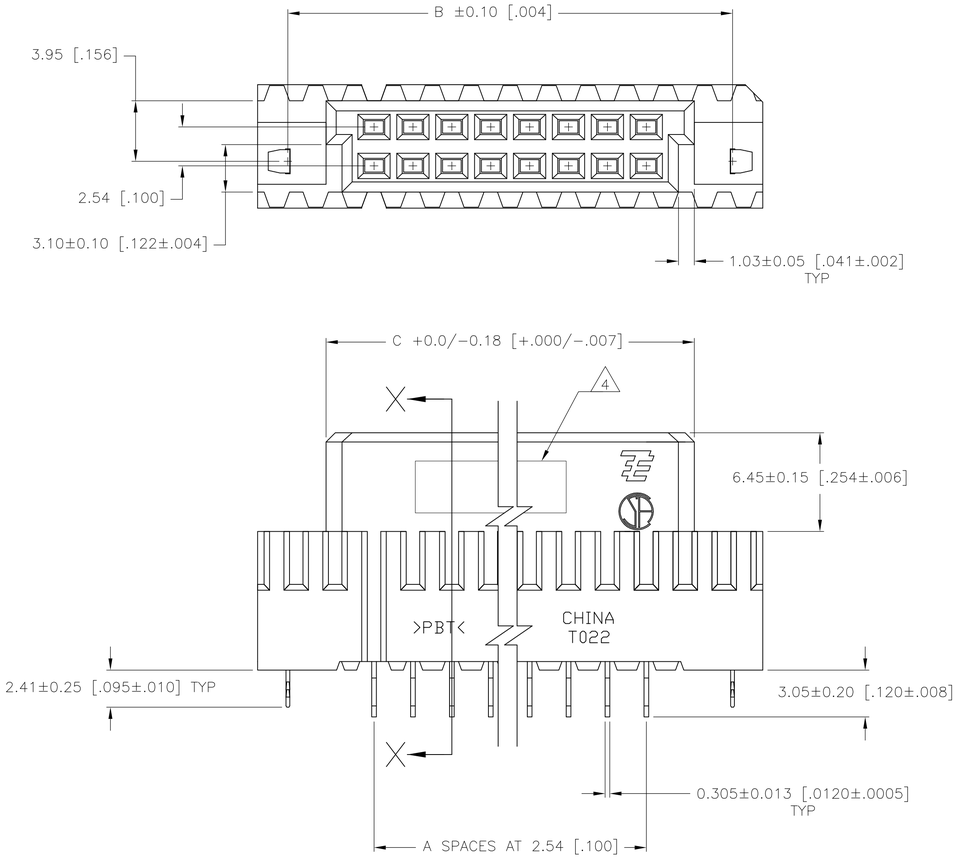

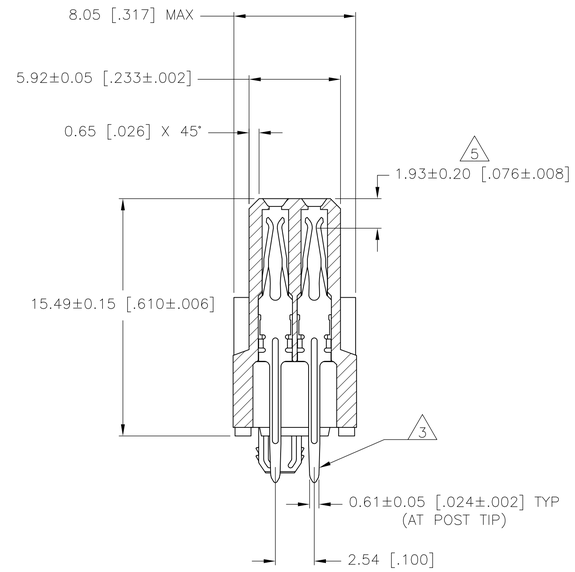

SECTION X–X

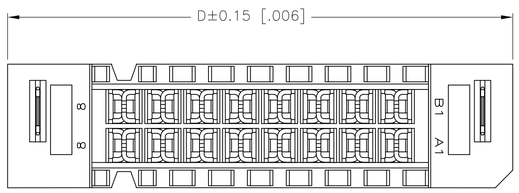

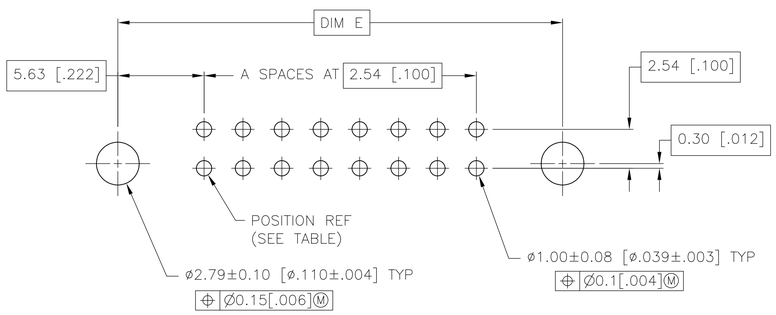

RECOMMENDED PC BOARD LAYOUT

1. HOUSING MATERIAL: GLASS FILLED POLYESTER, COLOR: GRAY.
2. CONTACT MATERIAL: PHOSPHOR BRONZE
3. CONTACT FINISH: 0.00076[.000030] MIN GOLD IN MATING AREA, 0.00254–0.00762[.000100–.000300] TIN–LEAD ON TAILS, ALL OVER 0.00127[.000050] MIN NICKEL.
4. PART NUMBER, DATE CODE MARKED ON OPPOSITE SIDE, THIS APPROX AREA.
5. CONTACT POINT.
6. TO BE G–PAX PACKAGED.
7. CURRENT RATING – 2 AMPS MAXIMUM PER CONTACT.
8. CONTACT FINISH: 0.00076[.000030] MIN GOLD IN MATING AREA, 0.00254–0.00762[.000100–.000300] MATTE TIN ON TAILS, ALL OVER 0.00127[.000050] MIN NICKEL.

	FINISH	POSITION	E	D	C	B	A	NO. OF POSN	PART NUMBER
	8	B13	41.73 [1.643]	45.59 [1.795]	36.73 [1.446]	41.73 [1.643]	12	26	5–1571436–3
	8	B8	29.03 [1.143]	32.89 [1.295]	24.03 [.946]	29.03 [1.143]	7	16	5–1571436–2
	8	B5	21.41 [.843]	25.27 [.995]	16.41 [.646]	21.41 [.843]	4	10	5–1571436–1
SUPERSEDED BY 5–1571436–3	3	B13	41.73 [1.643]	45.59 [1.795]	36.73 [1.446]	41.73 [1.643]	12	26	1571436–3
SUPERSEDED BY 5–1571436–2	3	B8	29.03 [1.143]	32.89 [1.295]	24.03 [.946]	29.03 [1.143]	7	16	1571436–2
SUPERSEDED BY 5–1571436–1	3	B5	21.41 [.843]	25.27 [.995]	16.41 [.646]	21.41 [.843]	4	10	1571436–1

THIS DRAWING IS A CONTROLLED DOCUMENT.

DIMENSIONS: mm [INCHES]

TOLERANCES UNLESS OTHERWISE SPECIFIED:
0 PLC ± –
1 PLC ± –
2 PLC ± 0.13 [.005]
3 PLC ± –
4 PLC ± –
ANGLES ± –

MATERIAL 1 2

FINISH SEE TABLE

DWN R BROWN 04FEB03
CHK J GESFORD 04FEB03
APVD J GESFORD 04FEB03

PRODUCT SPEC —
APPLICATION SPEC —
WEIGHT —

Tyco Electronics
Tyco Electronics Corporation
Harrisburg, PA 17105–3608

NAME RECEPTACLE ASSEMBLY, EUROCARD, TYPE C WITH BOARD LOCKS, SPECIAL PACKAGING

SIZE	CAGE CODE	DRAWING NO	RESTRICTED TO
A1	00779	C-1571436	—

CUSTOMER DRAWING | SCALE 5:1 | SHEET 1 OF 1 | REV D