THIS DRAWING IS UNPUBLISHED. RELEASED FOR PUBLICATION -,- .
© COPYRIGHT - By - ALL RIGHTS RESERVED.

LOC	DIST
—	—

REVISIONS

P	LTR	DESCRIPTION	DATE	DWN	APVD
	AC1	REVISED PER ECO-16-001584	04FEB2016	NK	DR

AMP WIRE RANGE	UL E13288 Listed	CSA LR7189 Certified
16-14 AWG SOLID OR STRANDED	16-14 AWG SOLID OR STRANDED	16-14 AWG SOLID OR STRANDED

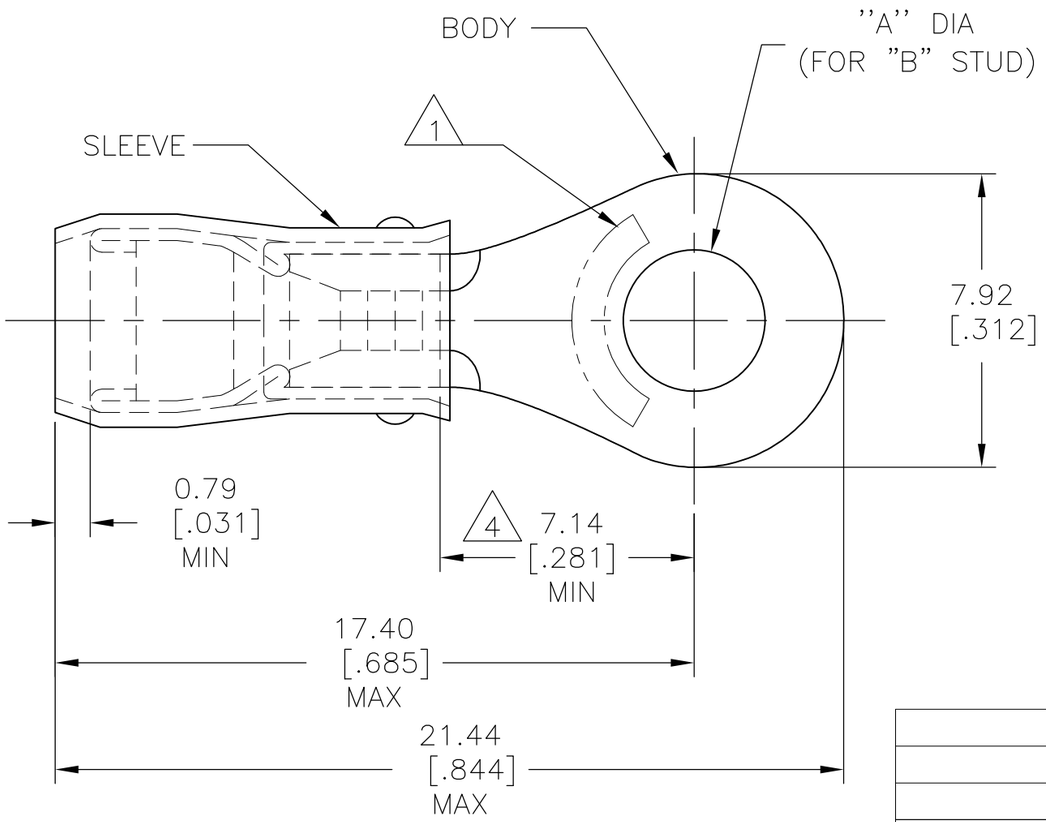

1. STAMP AMP 16-14* APPROX AS SHOWN.
2. WIRE INSULATION DIA: 2.67-3.81[.105-.150].
3. TONGUE MATERIAL THK: 0.79±0.05[.031±.002].
4. APPLIES FROM EDGE OF METAL WIRE BARREL TO CENTER OF STUD HOLE

MILITARY P/N AND CLASS	"B"	DIM "A"	QUANTITY	PACKAGE TYPE	PART NO
-	10	5.00±0.08[.197±.003]	100	LOOSE PIECE, BOX	5-51864-1
-	8	4.34±0.08[.171±.003]	100	LOOSE PIECE, BOX	4-51864-1
-	6	3.68±0.08[.145±.003]	100	LOOSE PIECE, BOX	3-51864-1
MS25036-153 CLASS 2	8	4.34±0.08[.171±.003]	5000	ON TAPE, REEL	51864-5
MS25036-108 CLASS 2	10	5.00±0.08[.197±.003]	5000	ON TAPE, REEL	51864-4
MS25036-107 CLASS 2	6	3.68±0.08[.145±.003]	5000	ON TAPE, REEL	51864-3
MS25036-108 CLASS 1 & 2	10	5.00±0.08[.197±.003]	1000	LOOSE PIECE	51864-2
MS25036-153 CLASS 1 & 2	8	4.34±0.08[.171±.003]	1000	LOOSE PIECE	51864-1
MS25036-107 CLASS 1 & 2	6	3.68±0.08[.145±.003]	1000	LOOSE PIECE	51864

AMP INCORPORATED
CUSTOMER SERVICE SYSTEMS

FOR ADDITIONAL PRODUCT INFORMATION OR COPIES OF DRAWINGS AND TECHNICAL DOCUMENTS	PRODUCT INFORMATION CENTER 1-800-522-6752
FOR APPLICATION TOOLING INFORMATION	TOOLING ASSISTANCE CENTER 1-800-722-1111
FOR ORDER ENTRY	1-800-526-5142

MAX RECOMMENDED OPERATING TEMPERATURE: 105°C[221°F] MAX

VOLTAGE RATING: 300 V MAX

CIRCULAR MIL AREA: 1.04-2.62mm²[2050-5180] CIR MILS SOLID OR STRANDED

THIS DRAWING IS A CONTROLLED DOCUMENT.

DIMENSIONS: mm [INCHES]

TOLERANCES UNLESS OTHERWISE SPECIFIED:
0 PLC ± -
1 PLC ± -
2 PLC ± 0.20[.008]
3 PLC ± -
4 PLC ± -
ANGLES ± -

MATERIAL: COPPER PER ASTM B-152 SLEEVE, BLUE NYLON

FINISH: TIN PLATE PER ASTM B545

DWN	JR RUTH	27OCT99
CHK	RE HERSEY	27OCT99
APVD	C PRESNELL	27OCT99
PRODUCT SPEC	UL 486A	
APPLICATION SPEC	—	
WEIGHT	—	

TE Connectivity

NAME: TERMINAL, RING TONGUE, PIDG,™ WIRE SIZE, 16-14 AWG

SIZE	CAGE CODE	DRAWING NO	RESTRICTED TO
A3	00779	C-51864	—

CUSTOMER DRAWING | SCALE NTS | SHEET 1 OF 2 | REV AC1

1470-19 (3/11)

THIS DRAWING IS UNPUBLISHED. RELEASED FOR PUBLICATION – ,– .
© COPYRIGHT – By – ALL RIGHTS RESERVED.

LOC	DIST
—	—

REVISIONS

P	LTR	DESCRIPTION	DATE	DWN	APVD
	–	SEE SHEET 1	–	—	—

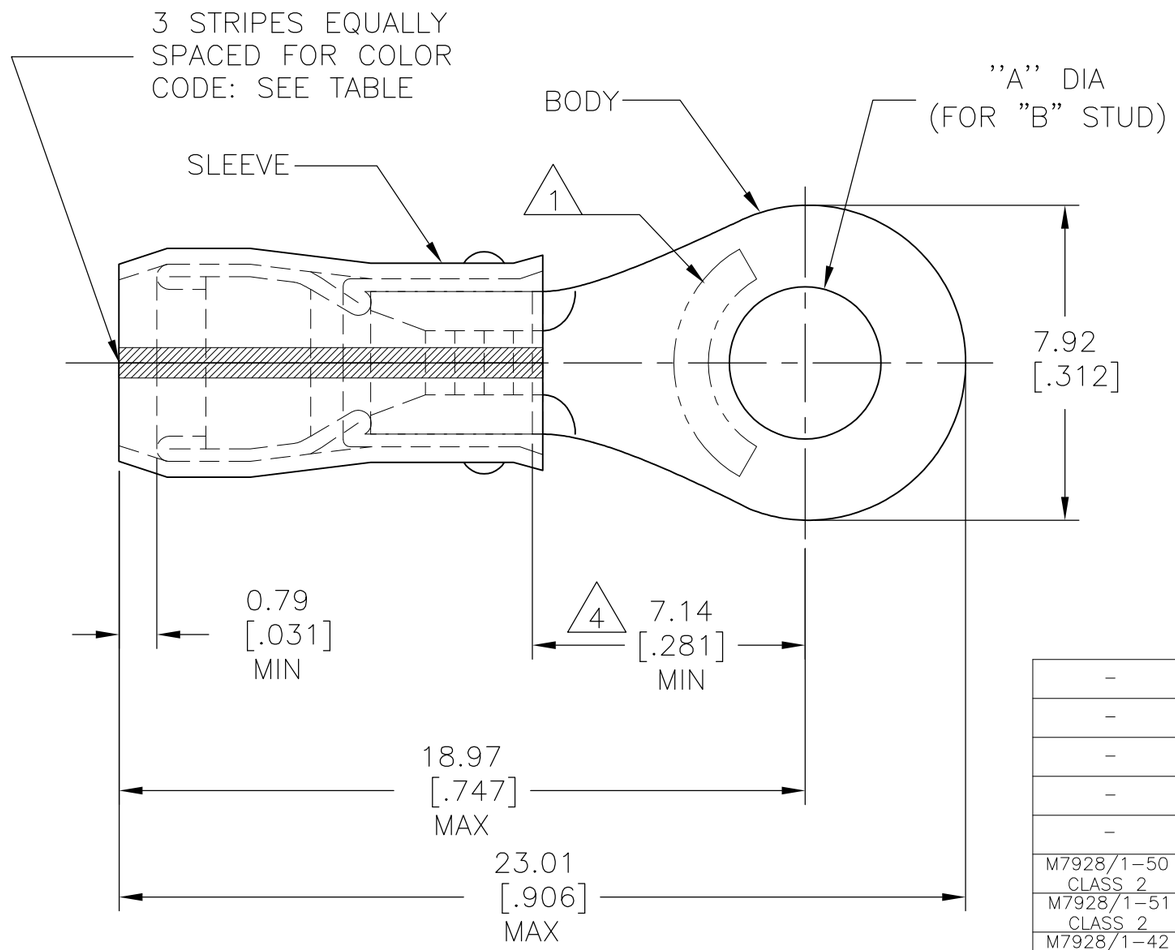

AMP WIRE RANGE

SEE TABLE STRANDED

1 STAMP AMP[ ] APPROX AS SHOWN SEE TABLE BELOW.

2 WIRE INSULATION DIA: 1.60–3.30[.063–.130] FOR 16 AWG, 1.98–3.30[.078–.130] FOR 14 AWG.

3 TONGUE MATERIAL THK: 0.79±0.05[.031±.002].

4 APPLIES FROM EDGE OF METAL WIRE BARREL TO CENTER OF STUD HOLE

	MILITARY P/N AND CLASS	STRIPE COLOR	1	WIRE SIZE	"B"	DIM "A"	QUANTITY	PACKAGE TYPE	PART NO
	–	GREEN	14*	14	8	4.34±0.08[.171±.003]	100	LOOSE PIECE, BOX	9–51864–5
	–	GREEN	14*	14	10	5.00±0.08[.197±.003]	100	LOOSE PIECE, BOX	9–51864–1
	–	GREEN	14*	14	6	3.68±0.08[.145±.003]	100	LOOSE PIECE, BOX	8–51864–1
	–	BLUE	16*	16	10	5.00±0.08[.197±.003]	100	LOOSE PIECE, BOX	7–51864–1
	–	BLUE	16*	16	6	3.68±0.08[.145±.003]	100	LOOSE PIECE, BOX	6–51864–1
	M7928/1–50 CLASS 2	GREEN	14*	14	8	4.34±0.08[.171±.003]	5000	ON TAPE, REEL	1–51864–7
	M7928/1–51 CLASS 2	GREEN	14*	14	10	5.00±0.08[.197±.003]	5000	ON TAPE, REEL	1–51864–5
	M7928/1–42 CLASS 2	BLUE	16*	16	10	5.00±0.08[.197±.003]	5000	ON TAPE, REEL	1–51864–3
OBSOLETE	~~M7928/1–40 CLASS 2~~	~~BLUE~~	~~16*~~	~~16~~	~~6~~	~~3.68±0.08[.145±.003]~~	~~5000~~	~~ON TAPE, REEL~~	~~1–51864–2~~
	M7928/1–50 CLASS 1 & 2	GREEN	14*	14	8	4.34±0.08[.171±.003]	1000	LOOSE PIECE	1–51864–1
	M7928/1–41 CLASS 1 & 2	BLUE	16*	16	8	4.34±0.08[.171±.003]	1000	LOOSE PIECE	1–51864–0
	M7928/1–51 CLASS 1 & 2	GREEN	14*	14	10	5.00±0.08[.197±.003]	1000	LOOSE PIECE	51864–9
	M7928/1–49 CLASS 1 & 2	GREEN	14*	14	6	3.68±0.08[.145±.003]	1000	LOOSE PIECE	51864–8
	M7928/1–42 CLASS 1 & 2	BLUE	16*	16	10	5.00±0.08[.197±.003]	1000	LOOSE PIECE	51864–7
	M7928/1–40 CLASS 1 & 2	BLUE	16*	16	6	3.68±0.08[.145±.003]	1000	LOOSE PIECE	51864–6

AMP INCORPORATED
CUSTOMER SERVICE SYSTEMS

FOR ADDITIONAL PRODUCT INFORMATION OR COPIES OF DRAWINGS AND TECHNICAL DOCUMENTS	PRODUCT INFORMATION CENTER 1–800–522–6752
FOR APPLICATION TOOLING INFORMATION	TOOLING ASSISTANCE CENTER 1–800–722–1111
FOR ORDER ENTRY	1–800–526–5142

MAX RECOMMENDED OPERATING TEMPERATURE: 105°C[221°F] MAX

VOLTAGE RATING: 300 V MAX

WIRE RANGE:	CIRC MIL AREA:
16	1.42mm² [2800]
14	2.15mm² [4234]

STRANDED

THIS DRAWING IS A CONTROLLED DOCUMENT.

DIMENSIONS: mm [INCHES]

TOLERANCES UNLESS OTHERWISE SPECIFIED:

0 PLC	± –
1 PLC	± –
2 PLC	± 0.20[.008]
3 PLC	± –
4 PLC	± –
ANGLES	± –

MATERIAL: COPPER PER ASTM B–152 SLEEVE, BLUE NYLON

FINISH: TIN PLATE PER ASTM B545

DWN	JR RUTH	27OCT99
CHK	RE HERSEY	27OCT99
APVD	C PRESNELL	27OCT99
PRODUCT SPEC	—	
APPLICATION SPEC	NOT AVAILABLE	
WEIGHT	—	

TE Connectivity

NAME: TERMINAL, RING TONGUE, I.R., PIDG™, WIRE SIZE, 16–14AWG

SIZE	CAGE CODE	DRAWING NO	RESTRICTED TO
A3	00779	C–51864	—

CUSTOMER DRAWING | SCALE NTS | SHEET 2 OF 2 | REV AC1

Mouser Electronics

Authorized Distributor

Click to View Pricing, Inventory, Delivery & Lifecycle Information:

TE Connectivity:

7-51864-1