THIS DRAWING IS UNPUBLISHED. RELEASED FOR PUBLICATION - ,- .
© COPYRIGHT - BY TYCO ELECTRONICS CORPORATION. ALL INTERNATIONAL RIGHTS RESERVED.

LOC	DIST
—	—

REVISIONS

P	LTR	DESCRIPTION	DATE	DWN	APVD
	A1	REVISED PER ECO-10-014168	02AUG10	HMR	MW

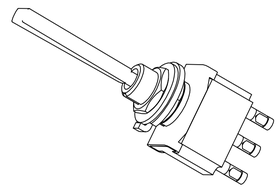

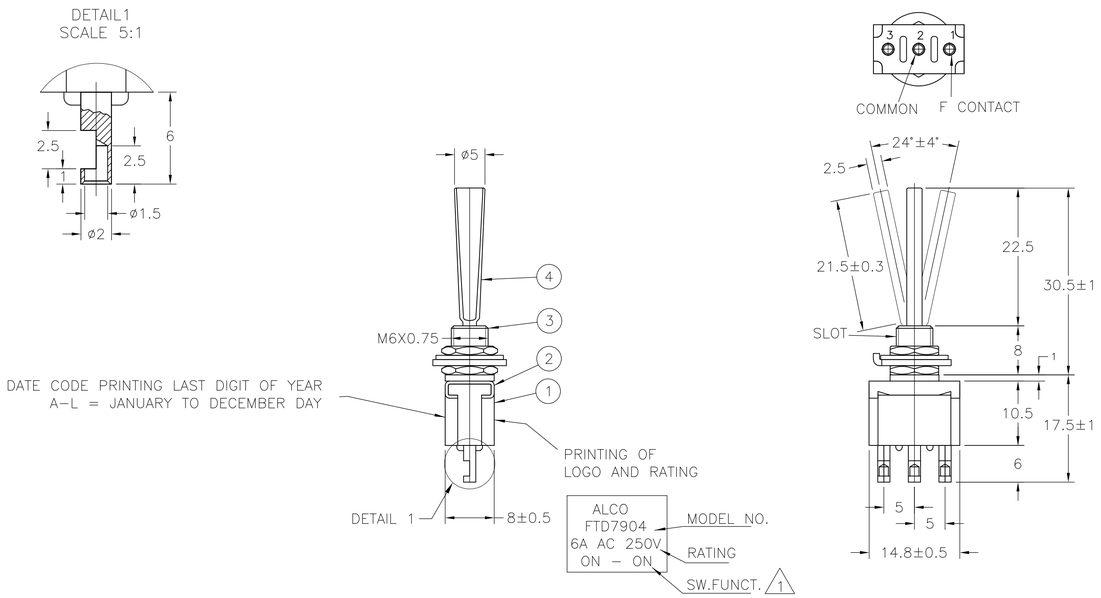

FUNCTION CHART

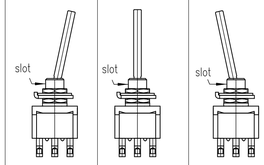

TE PN	PART	TERMINALS 2 AND 3		TERMINALS 1 AND 2
5-6437630-3	FTD7904	ON	NONE	ON
5-6437630-4	FTD79G04	ON	NONE	ON
5-6437630-8	FTE79G04	ON	OFF	ON

(ON): MOMENTARY ACTION
OFF: MECHANICAL POSITION WITHOUT ELECTRICAL CONNECTION
NONE: NO MECHANICAL POSITION

1. 0.5VA NO SWITCH FUNCTION WILL BE MARKED BUT WILL BE MARKED GOLD CON.
2. OPERATING TEMPERATURE –20~C TO +70~C
3. ALL MATERIALS AND FINISHES COMPLY WITH ROHS DIRECTIVE

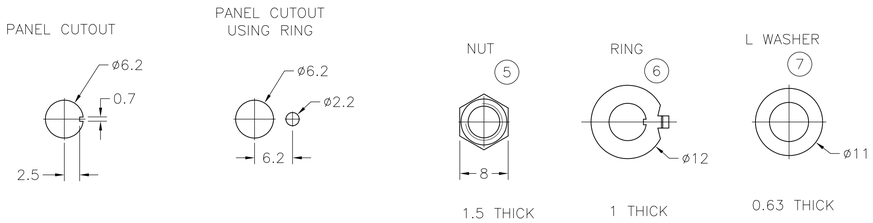

5-6437630-4 5-6437630-8	FTD79G04 FTE79G04	C3602BD Ep-Cu/Ni3,Au1b	C3602BD Ep-Cu/Ni3,Au1b	20V AC/DC 0.4VA MAX	MAX 10 MILLIOHMS AT DC 2 ~ 4V 0.1A	MIN 1000 M Ohms AT DC 500V	AC 1KV/1min (AC 1.2KV/1sec)	ELECTRICALLY 50,000 CYCLES AT 20 CYCLES/MIN (RATED LOAD RESISTIVE) MECHANICALLY 100,000 CYCLES AT 20 CYCLES/MIN
5-6437630-3	FTD7904	99,8% Silver + C3602BD Ep-Cu/Ni3,AuFb	C3602BD Ep-Cu/Ni3,AuFb	AC 125V 6A AC 250V 6A	MAX 10 MILLIOHMS AT DC 2 ~ 4V 1A			
TE PN	PART	F CONTACT	COMMON	RATING	INITIAL CONTACT RESISTANCE	INSULATION RESISTANCE	DIELECTRIC STRENGTH	ENDURANCE
		CONTACT MATERIAL		SPECIFICATIONS				

MATERIALS CHART

Ep-Fe/Cu2,Ni4b	SK-5	L WASHER	7
Ep-Fe/Cu2,Ni3b	SPCC	RING	6
Ep-Cu/Ni3b	C3602BD	NUT	5
Ep-Cu/Ni3,Cr1b	C3602BD	ACTUATOR	4
Ep-Cu/Ni3b	C3602BD	BUSHING	3
	SUS	FRAME	2
	POLYESTER RESIN	CASE	1
OPTIONAL DESCRIPTION	MATERIAL/SURFACE	PART NAME	PART NO

PART LIST

THIS DRAWING IS A CONTROLLED DOCUMENT.

DIMENSIONS: mm

TOLERANCES UNLESS OTHERWISE SPECIFIED:
0 PLC ± –
1 PLC ± –
2 PLC ± –
3 PLC ± –
4 PLC ± –
ANGLES ± –

MATERIAL –
FINISH –

DWN RAGHAVENDRA 02AUG10
CHK MICHAEL WILBOURN 02AUG10
APVD MICHAEL WILBOURN 02AUG10
PRODUCT SPEC —
APPLICATION SPEC —
WEIGHT —

Tyco Electronics
Tyco Electronics Corporation
Harrisburg, PA 17105-3608

NAME Toggle Switch Single Pole SP LONG LEVER

SIZE	CAGE CODE	DRAWING NO	RESTRICTED TO
A1	00779	C-1968514	—

CUSTOMER DRAWING | SCALE 1:1 | SHEET 1 OF 1 | REV A1

4805 (1/08)