THIS DRAWING IS UNPUBLISHED. RELEASED FOR PUBLICATION -.- .
© COPYRIGHT - BY TYCO ELECTRONICS CORPORATION. ALL RIGHTS RESERVED.

| LOC | DIST |
|---|---|
| AD | 00 |

REVISIONS

| P | LTR | DESCRIPTION | DATE | DWN | APVD |
|---|---|---|---|---|---|
| | J1 | ECO-05-10260 | 29SEP05 | MB | MS |

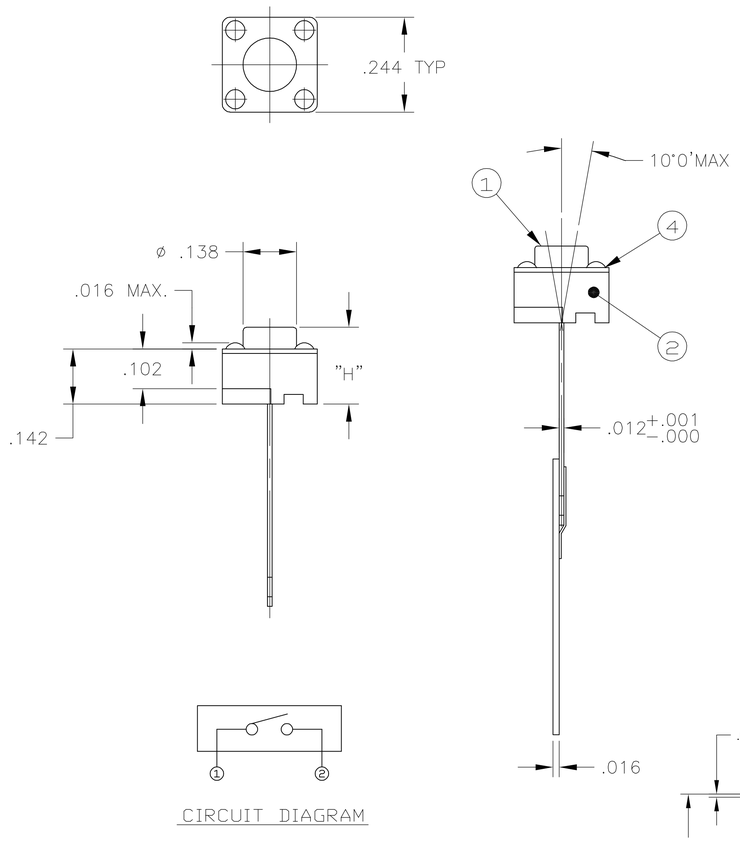


CIRCUIT DIAGRAM

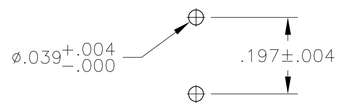


RECOMMENDED HOLE LAYOUT

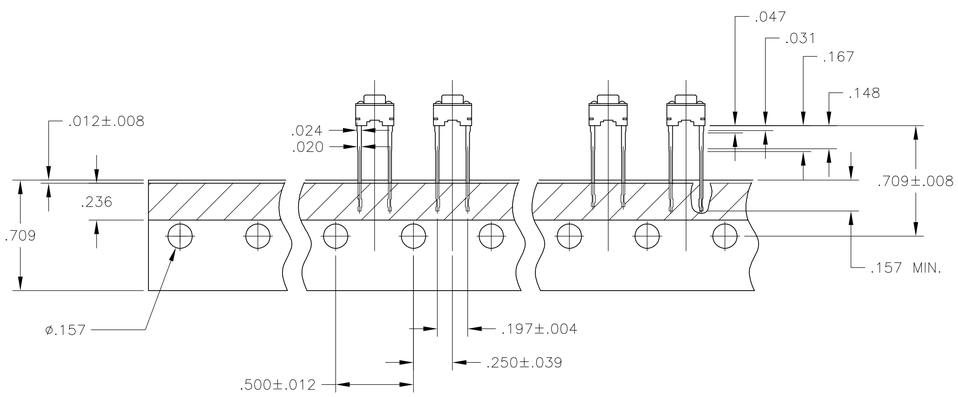


SPECIFICATIONS:

MATERIALS:
CASE: PPS UL94V-0, BLACK.
COVER: STEEL, TIN PLATE.
ACTUATOR BUTTON: PPS UL94V-0, COLOR SEE TABLE
MOVING CONTACT: PHOS BRONZE, SILVER OVER NICKEL
FIXED CONTACT/TERMINAL: BRASS, SILVER OVER NICKEL

ELECTRICAL:
CONTACT RATING: 50 MILLIAMPS @ 12 VDC (RESISTIVE LOAD).
CONTACT RESISTANCE: 100 MILLIOHMS MAX.
INSULATION RESISTANCE: 100 MEGOHMS MIN. @ 100 VDC.
DIELECTRIC STRENGTH: 500 VAC 50/60 Hz FOR 1 MINUTE
LIFE EXPECTANCY: 100,000 CYCLES.

MECHANICAL:
ACTUATION FORCE: SEE TABLE.
ACTUATION TRAVEL: .010 in. (0,25 mm) APPROX.

ENVIRONMENTAL:
OPERATING TEMPERATURE: -35°C TO +105°C
STORAGE TEMPERATURE: -30°C TO +80°C
SOLDERABILITY EIA-364-52, CLASS 1, CATEGORY 2
SOLDER HEAT RESISTANCE PER 109-202 CONDITION B

NOTES:

1. ALL MATERIALS AND FINISHES SHALL COMPLY WITH EU DIRECTIVE 2002/95/EC OF 27JAN2003 (ROHS)
2. RADIAL TAPE PACKAGING PER AUGAT SPEC.#295.
3. SPECIFICATIONS SUBJECT TO CHANGE WITHOUT NOTIFICATION.

| ACTUATION FORCE | ACTUATOR COLOR | DIM H | T&B P/N | Tyco P/N |
|---|---|---|---|---|
| 160 +/-50 grams | BLACK | .512 (13.0) | FSM14JRT | 1571010-1 |
| 260 +/-50 grams | RED | .374 (9.5) | FSM8JART | 147871-1 |
| 160 +/-50 grams | BLACK | .374 (9.5) | FSM8JRT | 147694-1 |
| 260 +/-50 grams | RED | .276 (7.0) | FSM6JART | 1571402-1 |
| 160 +/-50 grams | BLACK | .276 (7.0) | FSM6JRT | 4-1437565-8 |
| 260 +/-50 grams | RED | .197 (5.0) | FSM4JART | 147997-1 |
| 160 +/-50 grams | BLACK | .197 (5.0) | FSM4JRT | 4-1437565-0 |
| 160 +/-50 grams | BLACK | 0.169 (4.3) | FSM2JRT | 2-1437565-6 |
| 260 +/-50 grams | RED | 0.169 (4.3) | FSM2JART | 2-1437565-2 |

THIS DRAWING IS A CONTROLLED DOCUMENT.

DIMENSIONS: INCHES

TOLERANCES UNLESS OTHERWISE SPECIFIED:
0 PLC ± -
1 PLC ± -
2 PLC ± -
3 PLC ± .012
4 PLC ± -
ANGLES ± 1°

MATERIAL -
FINISH -

DWN M.BINNER 29SEP2005
CHK M.SARVER 28SEP05
APVD M.SARVER 28SEP05
PRODUCT SPEC —
APPLICATION SPEC —
WEIGHT —

tyco Electronics
Tyco Electronics Corporation
Harrisburg, PA 17105-3608

NAME SWITCH, PUSHBUTTON
—
—

| SIZE | CAGE CODE | DRAWING NO | RESTRICTED TO |
|---|---|---|---|
| A1 | 00779 | C-2-1437565-2 | — |

CUSTOMER DRAWING SCALE 1:1 SHEET 1 OF 1 REV J1