The product information in this catalog is for reference only. Please request the Engineering Drawing for the most current and accurate design information.
All non-RoHS products have been discontinued, or will be discontinued soon. Please check the products status on the Hirose website RoHS search at www.hirose-connectors.com, or contact your Hirose sales representative.

0.5mm Pitch SMT Board to Board Connector

DF12 Series

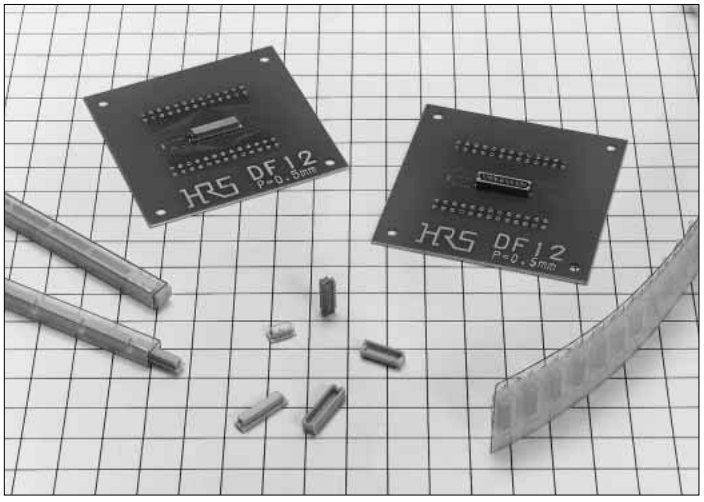

Correspond to automatic mounting

The vacuum pick-up area secures the automatic mounting machine for pick and place.

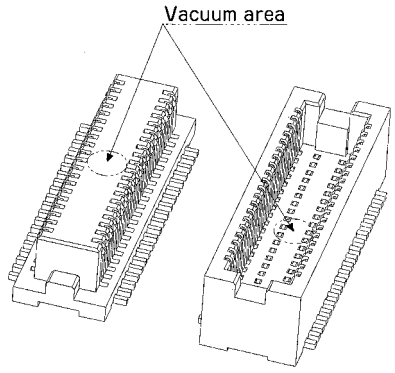

■Features

1. Broad Variations of Stacking Height

In addition to 0.5mm pitch ultra-miniature size connector, the stacking height of 3mm, 3.5mm, 4mm, and 5mm are provided.

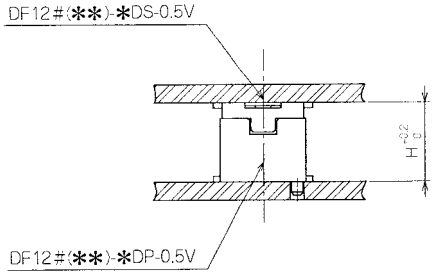

Header/Receptacle	DF12#(3.0)-*DS-0.5V Combination stacking height	DF12#-*DS-0.5V Combination stacking height
DF12#(3.0)-*DP-0.5V	3.0	———
DF12#(3.5)-*DP-0.5V	———	3.5
DF12#(4.0)-*DP-0.5V	———	4.0
DF12#(5.0)-*DP-0.5V	———	5.0

Note 1 : (**) of the product name DF12# (**) indicates the stacking height.
Note 2 : The stacking height doesn't include the soldering paste thickness.

[Stacking Height Variation]

Stacking Height		3.0mm	3.5mm	4.0mm	5.0mm
Number of Contacts	10 contacts	○	———	———	———
	14 contacts	○	———	———	———
	20 contacts	○	○	○	○
	30 contacts	○	○	○	○
	32 contacts	○	———	○	———
	36 contacts	○	○	○	○
	40 contacts	○	○	○	○
	50 contacts	○	○	○	○
	60 contacts	○	○	○	○
	80 contacts	○	———	———	———

2. Corresponding to Automatic Mounting

The connector has the vacuum pick-up area to enable automatic mounting with the embossed tape packaging.

3. Metal Fitting Available

The product including the metal fitting to prevent solder peeling is provided, considering the mounting on FPC.

■Applications

Mobile phone, LCD(Liquid Crystal Display), Note PC

The product information in this catalog is for reference only. Please request the Engineering Drawing for the most current and accurate design information.
All non-RoHS products have been discontinued, or will be discontinued soon. Please check the products status on the Hirose website RoHS search at www.hirose-connectors.com, or contact your Hirose sales representative.

■Product Specifications

Rating	Current rating 0.3A Voltage rating 50V AC	Operating Temperature Range -45 to +125℃ (Note 1) Operating Humidity Range 40 to 80%	Storage Temperature Range -10 to +60℃ (Note 2) Storage Humidity Range 40 to 70%

Item	Specification	Condition
1. Insulation Resistance	500M ohms min.	100V DC
2. Withstanding voltage	No flashover or insulation breakdown.	150V AC/1 minute
3. Contact Resistance	50m ohms max.	100mA
4. Vibration	No electrical discontinuity of 1μs or more	Frequency: 10 to 55 Hz, single amplitude of 0.75 mm, 2 hours in each of the 3 directions.
5. Humidity (Steady state)	Contact resistance: 50m ohms max. Insulation resistance:500M ohms min	96 hours at temperature of 40±2℃ and humidity of 90% to 95%
6. Temperature Cycle	Contact resistance: 50m ohms max. Insulation resistance:500M ohms min	(-65℃: 30 minutes 5 to 35℃: 10 minutes 125℃: 30 minutes 5 to 35℃: 10 minutes) 5 cycles
7. Durability (Mating/un-mating)	Contact resistance: 50m ohms max.	50 cycles
8. Resistance to Soldering heat	No deformation of components affecting performance.	Reflow: At the recommended temperature profile
		Manual soldering: 350℃ for 3 seconds

Note 1: Includes temperature rise caused by current flow.
Note 2: The term "storage" refers to products stored for long period of time prior to mounting and use. Operating Temperature Range and Humidity range covers non conducting condition of installed connectors in storage, shipment or during transportation.
Note 3: Information contained in this catalog represents general requirements for this Series. Contact us for the drawings and specifications for a specific part number shown.

■Material

Product	Part	Material	Finish	Remarks
Receptacle/Header	Insulator	Polyamide	Beige	UL94-V0
	Contact	Phosphor copper	Gold plated	————
	Fitting	Brass	Tin plated	————

■Ordering Information

●Receptacle

DF12 # (**) - * DS - 0.5 V (**)
❶ ❷ ❸ ❹ ❺ ❻ ❼ ❽

❶ Series Name : DF12

❷ Type

	Fitting	Boss
Blank	○	○
A	×	○
B	○	×
C	×	×

❸ Stacking height
3.0 : 3.0mm
Blank : 3.5 to 5.0mm

❹ Number of Contacts : 10, 14, 20, 30, 32, 36, 40, 50, 60 ,80
(The 32 contacts connector includes the stacking height 3mm only.)

❺ Connector Type
DS : Double-row receptacle

❻ Contact Pitch : 0.5mm

❼ Contact Style
V: Straight SMT

❽ Packaging Type
(81) : Embossed tape packaging (A, C type)
(86) : Embossed tape packaging (Blank, B type)

●Header

DF12 # (**) - * DP - 0.5 V (**)
❶ ❷ ❸ ❹ ❺ ❻ ❼ ❽

❷ Type

	Fitting	Boss
Blank	○	○
B	○	×
D	×	○
E	×	×

❸ Stacking height

Indication	Stacking Height
3.0	3.0mm
3.5	3.5mm
4.0	4.0mm
5.0	5.0mm

❺ Connector Type
DP: Double-row pin header
(81) : Embossed tape packaging (D,E type)
(86) : Embossed tape packaging (Blank, B type)

■Receptacle Without metal fitting

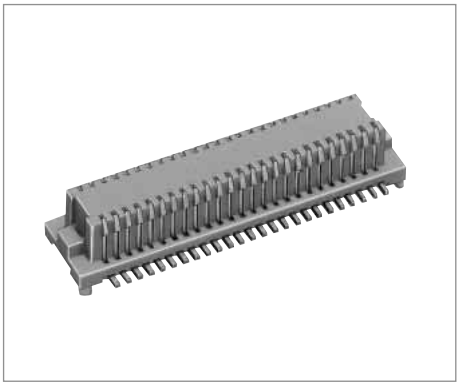

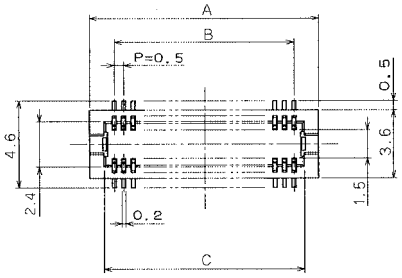

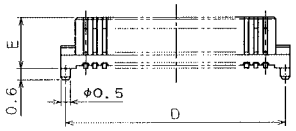

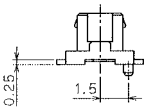

●Product Height: 3mm Product

Unit: mm

Part Number	CL No.	Number of Contacts	A	B	C	D	E	Remarks	RoHS
DF12A (3.0)-10DS-0.5V (81)	537-0626-9-81	10	4.6	2.0	3.1	4.1	2.2	Without metal fitting With boss	YES
DF12A (3.0)-14DS-0.5V (81)	537-0915-6-81	14	5.6	3.0	4.1	5.1			
DF12A (3.0)-20DS-0.5V (81)	537-0628-4-81	20	7.1	4.5	5.6	6.6			
DF12A (3.0)-30DS-0.5V (81)	537-0630-6-81	30	9.6	7.0	8.1	9.1			
DF12A (3.0)-32DS-0.5V (81)	537-0637-5-81	32	10.1	7.5	8.6	9.6			
DF12A (3.0)-36DS-0.5V (81)	537-0631-9-81	36	11.1	8.5	9.6	10.6			
DF12A (3.0)-40DS-0.5V (81)	537-0632-1-81	40	12.1	9.5	10.6	11.6			
DF12A (3.0)-50DS-0.5V (81)	537-0634-7-81	50	14.6	12.0	13.1	14.1			
DF12A (3.0)-60DS-0.5V (81)	537-0636-2-81	60	17.1	14.5	15.6	16.6			
DF12A (3.0)-80DS-0.5V (81)	537-0638-8-81	80	22.1	19.5	20.6	21.6			
DF12C (3.0)-10DS-0.5V (81)	537-0686-0-81	10	4.6	2.0	3.1	——	2.2	Without metal fitting Without boss	
DF12C (3.0)-14DS-0.5V (81)	537-0917-1-81	14	5.6	3.0	4.1	——			
DF12C (3.0)-20DS-0.5V (81)	537-0688-6-81	20	7.1	4.5	5.6	——			
DF12C (3.0)-30DS-0.5V (81)	537-0690-8-81	30	9.6	7.0	8.1	——			
DF12C (3.0)-32DS-0.5V (81)	537-0697-7-81	32	10.1	7.5	8.6	——			
DF12C (3.0)-36DS-0.5V (81)	537-0691-0-81	36	11.1	8.5	9.6	——			
DF12C (3.0)-40DS-0.5V (81)	537-0692-3-81	40	12.1	9.5	10.6	——			
DF12C (3.0)-50DS-0.5V (81)	537-0694-9-81	50	14.6	12.0	13.1	——			
DF12C (3.0)-60DS-0.5V (81)	537-0696-4-81	60	17.1	14.5	15.6	——			
DF12C (3.0)-80DS-0.5V (81)	537-0212-6-81	80	22.1	19.5	20.6	——			

●Product Height: 3.5 to 5mm Product

Unit: mm

Part Number	CL No.	Number of Contacts	A	B	C	D	E	Remarks	RoHS
DF12A-20DS-0.5V (81)	537-0078-5-81	20	7.1	4.5	5.6	6.6	2.7	Without metal fitting With boss	YES
DF12A-30DS-0.5V (81)	537-0080-7-81	30	9.6	7.0	8.1	9.1			
DF12A-32DS-0.5V (81)	537-0087-6-81	32	10.1	7.5	8.6	9.6			
DF12A-36DS-0.5V (81)	537-0081-0-81	36	11.1	8.5	9.6	10.6			
DF12A-40DS-0.5V (81)	537-0082-2-81	40	12.1	9.5	10.6	11.6			
DF12A-50DS-0.5V (81)	537-0084-8-81	50	14.6	12.0	13.1	14.1			
DF12A-60DS-0.5V (81)	537-0086-3-81	60	17.1	14.5	15.6	16.6			
DF12C-20DS-0.5V (81)	537-0203-5-81	20	7.1	4.5	5.6	——	2.7	Without metal fitting Without boss	
DF12C-30DS-0.5V (81)	537-0205-0-81	30	9.6	7.0	8.1	——			
DF12C-32DS-0.5V (81)	537-0212-6-81	32	10.1	7.5	8.6	——			
DF12C-36DS-0.5V (81)	537-0206-3-81	36	11.1	8.5	9.6	——			
DF12C-40DS-0.5V (81)	537-0207-6-81	40	12.1	9.5	10.6	——			
DF12C-50DS-0.5V (81)	537-0209-1-81	50	14.6	12.0	13.1	——			
DF12C-60DS-0.5V (81)	537-0211-3-81	60	17.1	14.5	15.6	——			

Note 1: Please order the embossed tape packaging product per reel. (1000 pcs./reel)

The product information in this catalog is for reference only. Please request the Engineering Drawing for the most current and accurate design information.
All non-RoHS products have been discontinued, or will be discontinued soon. Please check the products status on the Hirose website RoHS search at www.hirose-connectors.com, or contact your Hirose sales representative.

■Receptacle With metal fitting

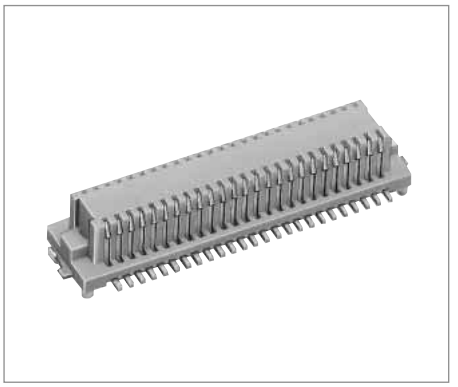

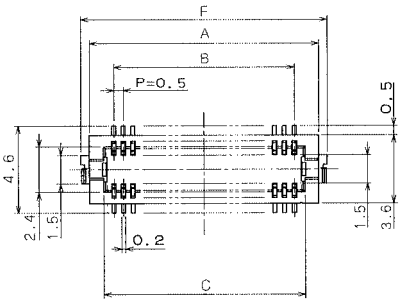

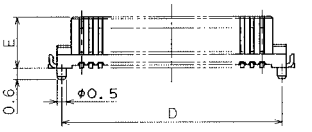

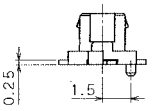

●Product Height: 3mm Product

Unit: mm

Part Number	CL No.	Number of Contacts	A	B	C	D	E	F	Remarks	RoHS
DF12 (3.0)-10DS-0.5V (86)	537-0601-8-86	10	4.6	2.0	3.1	4.1	2.2	5.5	With metal fitting With boss	YES
DF12 (3.0)-14DS-0.5V (86)	537-0914-3-86	14	5.6	3.0	4.1	5.1		6.5		
DF12 (3.0)-20DS-0.5V (86)	537-0603-3-86	20	7.1	4.5	5.6	6.6		8.0		
DF12 (3.0)-30DS-0.5V (86)	537-0605-9-86	30	9.6	7.0	8.1	9.1		10.5		
DF12 (3.0)-32DS-0.5V (86)	537-0612-4-86	32	10.1	7.5	8.6	9.6		11.0		
DF12 (3.0)-36DS-0.5V (86)	537-0606-1-86	36	11.1	8.5	9.6	10.6		12.0		
DF12 (3.0)-40DS-0.5V (86)	537-0607-4-86	40	12.1	9.5	10.6	11.6		13.0		
DF12 (3.0)-50DS-0.5V (86)	537-0609-0-86	50	14.6	12.0	13.1	14.1		15.5		
DF12 (3.0)-60DS-0.5V (86)	537-0611-1-86	60	17.1	14.5	15.6	16.6		18.0		
DF12 (3.0)-80DS-0.5V (86)	537-0613-7-86	80	22.1	19.5	20.6	21.6		23.0		
DF12B (3.0)-10DS-0.5V (86)	537-0651-6-86	10	4.6	2.0	3.1	4.1	2.2	5.5	With metal fitting Without boss	
DF12B (3.0)-14DS-0.5V (86)	537-0916-9-86	14	5.6	3.0	4.1	5.1		6.5		
DF12B (3.0)-20DS-0.5V (86)	537-0653-1-86	20	7.1	4.5	5.6	——		8.0		
DF12B (3.0)-30DS-0.5V (86)	537-0655-7-86	30	9.6	7.0	8.1	——		10.5		
DF12B (3.0)-32DS-0.5V (86)	537-0662-2-86	32	10.1	7.5	8.6	——		11.0		
DF12B (3.0)-36DS-0.5V (86)	537-0656-0-86	36	11.1	8.5	9.6	——		12.0		
DF12B (3.0)-40DS-0.5V (86)	537-0657-2-86	40	12.1	9.5	10.6	——		13.0		
DF12B (3.0)-50DS-0.5V (86)	537-0659-8-86	50	14.6	12.0	13.1	——		15.5		
DF12B (3.0)-60DS-0.5V (86)	537-0661-0-86	60	17.1	14.5	15.6	c		18.0		
DF12B (3.0)-80DS-0.5V (86)	537-0663-5-86	80	22.1	19.5	20.6	21.6		23.0		

Part Number	CL No.	Number of Contacts	A	B	C	D	E	F	Remarks	RoHS
DF12-20DS-0.5V (86)	537-0003-6- 86	20	7.1	4.5	5.6	6.6	2.7	8.0	With metal fitting With boss	YES
DF12-30DS-0.5V (86)	537-0005-1- 86	30	9.6	7.0	8.1	9.1		10.5		
DF12-32DS-0.5V (86)	537-0012-7- 86	32	10.1	7.5	8.6	9.6		11.0		
DF12-36DS-0.5V (86)	537-0006-4- 86	36	11.1	8.5	9.6	10.6		12.0		
DF12-40DS-0.5V (86)	537-0007-7- 86	40	12.1	9.5	10.6	11.6		13.0		
DF12-50DS-0.5V (86)	537-0009-2- 86	50	14.6	12.0	13.1	14.1		15.5		
DF12-60DS-0.5V (86)	537-0011-4- 86	60	17.1	14.5	15.6	16.6		18.0		
DF12B-20DS-0.5V (86)	537-0303-0- 86	20	7.1	4.5	5.6	——	2.7	8.0	With metal fitting Without boss	
DF12B-30DS-0.5V (86)	537-0305-5- 86	30	9.6	7.0	8.1	——		10.5		
DF12B-32DS-0.5V (86)	537-0312-0- 86	32	10.1	7.5	8.6	9.6		11.0		
DF12B-36DS-0.5V (86)	537-0306-8- 86	36	11.1	8.5	9.6	——		12.0		
DF12B-40DS-0.5V (86)	537-0307-0- 86	40	12.1	9.5	10.6	——		13.0		
DF12B-50DS-0.5V (86)	537-0309-6- 86	50	14.6	12.0	13.1	——		15.5		
DF12B-60DS-0.5V (86)	537-0311-8- 86	60	17.1	14.5	15.6	——		18.0		

Note : Please order the embossed tape packaging product per reel. (1000 pcs./reel)

■Header Without metal fitting

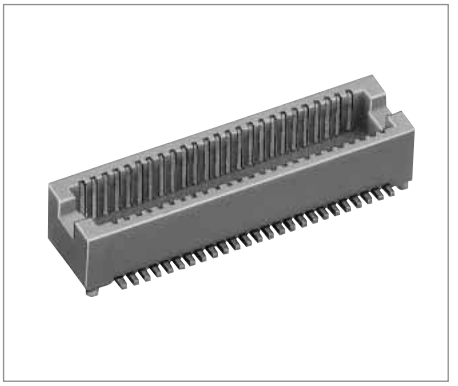

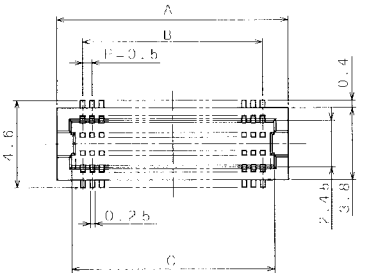

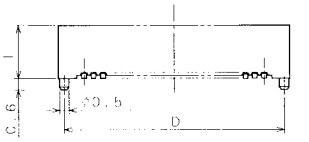

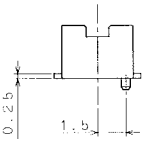

●Stacking Height: 3.5 to 5mm Product

Unit: mm

Part Number	CL No.	Number of Contacts	A	B	C	D	E	Remarks	RoHS
DF12D (3.0)-10DP-0.5V (81)	537-0791-5- 81	10	4.7	2.0	3.2	4.1	2.3	Without metal fitting With boss	YES
DF12D (3.0)-14DP-0.5V (81)	537-0920-6- 81	14	5.7	3.0	4.2	5.1			
DF12D (3.0)-20DP-0.5V (81)	537-0793-0- 81	20	7.2	4.5	5.7	6.6			
DF12D (3.0)-30DP-0.5V (81)	537-0795-6- 81	30	9.7	7.0	8.2	9.1			
DF12D (3.0)-32DP-0.5V (81)	537-0802-0- 81	32	10.2	7.5	8.7	9.6			
DF12D (3.0)-36DP-0.5V (81)	537-0796-9- 81	36	11.2	8.5	9.7	10.6			
DF12D (3.0)-40DP-0.5V (81)	537-0797-1- 81	40	12.2	9.5	10.7	11.6			
DF12D (3.0)-50DP-0.5V (81)	537-0799-7- 81	50	14.7	12.0	13.2	14.1			
DF12D (3.0)-60DP-0.5V (81)	537-0801-7- 81	60	17.2	14.5	15.7	16.6			
DF12D (3.0)-80DP-0.5V (81)	537-0803-2- 81	80	22.2	19.5	20.7	21.6			
DF12E (3.0)-10DP-0.5V (81)	537-0826-8- 81	10	4.7	2.0	3.2	——	2.3	Without metal fitting Without boss	
DF12E (3.0)-14DP-0.5V (81)	537-0921-9- 81	14	5.7	3.0	4.2	——			
DF12E (3.0)-20DP-0.5V (81)	537-0828-3- 81	20	7.2	4.5	5.7	——			
DF12E (3.0)-30DP-0.5V (81)	537-0830-5- 81	30	9.7	7.0	8.2	——			
DF12E (3.0)-32DP-0.5V (81)	537-0837-4- 81	32	10.2	7.5	8.7	——			
DF12E (3.0)-36DP-0.5V (81)	537-0831-8- 81	36	11.2	8.5	9.7	——			
DF12E (3.0)-40DP-0.5V (81)	537-0832-0- 81	40	12.2	9.5	10.7	——			
DF12E (3.0)-50DP-0.5V (81)	537-0834-6- 81	50	14.7	12.0	13.2	——			
DF12E (3.0)-60DP-0.5V (81)	537-0836-1- 81	60	17.2	14.5	15.7	——			
DF12E (3.0)-80DP-0.5V (81)	537-0838-7- 81	80	22.2	19.5	20.7	——			

Note : Order the emboss package product per reel. (1000 pcs./reel)

The product information in this catalog is for reference only. Please request the Engineering Drawing for the most current and accurate design information.
All non-RoHS products have been discontinued, or will be discontinued soon. Please check the products status on the Hirose website RoHS search at www.hirose-connectors.com, or contact your Hirose sales representative.

■Header Without metal fitting

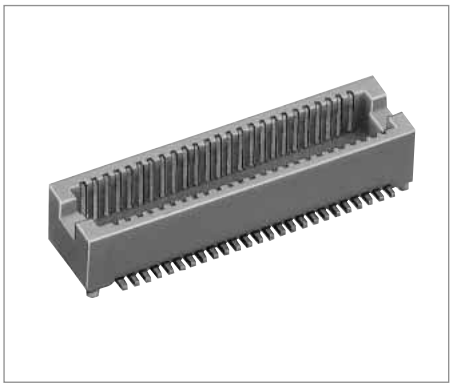

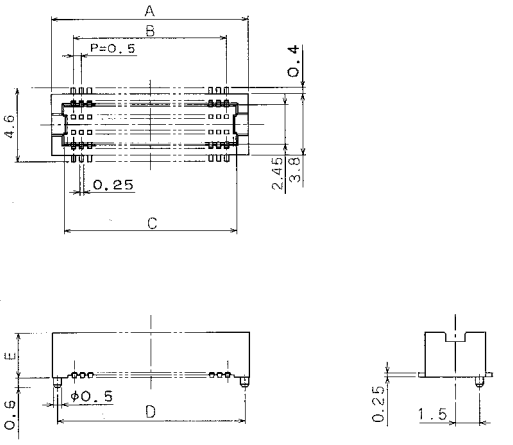

●Stacking Height: 3.5 to 5mm Product

Unit: mm

Part Number	CL No.	Number of Contacts	A	B	C	D	E	Remarks	RoHS
DF12D (3.5)-20DP-0.5V (81)	537-0428-5- 81	20	7.2	4.5	5.7	6.6	2.8	Without metal fitting With boss	YES
DF12D (3.5)-30DP-0.5V (81)	537-0430-7- 81	30	9.7	7.0	8.2	9.1			
DF12D (3.5)-36DP-0.5V (81)	537-0431-0- 81	36	11.2	8.5	9.7	10.6			
DF12D (3.5)-40DP-0.5V (81)	537-0432-2- 81	40	12.2	9.5	10.7	11.6			
DF12D (3.5)-50DP-0.5V (81)	537-0434-8- 81	50	14.7	12.0	13.2	14.1			
DF12D (3.5)-60DP-0.5V (81)	537-0436-3- 81	60	17.2	14.5	15.7	16.6			
DF12D (4.0)-20DP-0.5V (81)	537-0453-2- 81	20	7.2	4.5	5.7	6.6	3.3		
DF12D (4.0)-30DP-0.5V (81)	537-0455-8- 81	30	9.7	7.0	8.2	9.1			
DF12D (4.0)-36DP-0.5V (81)	537-0456-0- 81	36	11.2	8.5	9.7	10.6			
DF12D (4.0)-40DP-0.5V (81)	537-0457-3- 81	40	12.2	9.5	10.7	11.6			
DF12D (4.0)-50DP-0.5V (81)	537-0459-9- 81	50	14.7	12.0	13.2	14.1			
DF12D (4.0)-60DP-0.5V (81)	537-0461-0- 81	60	17.2	14.5	15.7	16.6			
DF12D (5.0)-20DP-0.5V (81)	537-0478-3- 81	20	7.2	4.5	5.7	6.6	4.3		
DF12D (5.0)-30DP-0.5V (81)	537-0480-5- 81	30	9.7	7.0	8.2	9.1			
DF12D (5.0)-36DP-0.5V (81)	537-0481-8- 81	36	11.2	8.5	9.7	10.6			
DF12D (5.0)-40DP-0.5V (81)	537-0482-0- 81	40	12.2	9.5	10.7	11.6			
DF12D (5.0)-50DP-0.5V (81)	537-0484-6- 81	50	14.7	12.0	13.2	14.1			
DF12D (5.0)-60DP-0.5V (81)	537-0486-1- 81	60	17.2	14.5	15.7	16.6			
DF12E (3.5)-20DP-0.5V (81)	537-0528-0- 81	20	7.2	4.5	5.7	——	2.8	Without metal fitting Without boss	
DF12E (3.5)-30DP-0.5V (81)	537-0530-1- 81	30	9.7	7.0	8.2	——			
DF12E (3.5)-36DP-0.5V (81)	537-0531-4- 81	36	11.2	8.5	9.7	——			
DF12E (3.5)-40DP-0.5V (81)	537-0532-7- 81	40	12.2	9.5	10.7	——			
DF12E (3.5)-50DP-0.5V (81)	537-0534-2- 81	50	14.7	12.0	13.2	——			
DF12E (3.5)-60DP-0.5V (81)	537-0536-8- 81	60	17.2	14.5	15.7	——			
DF12E (4.0)-20DP-0.5V (81)	537-0553-7- 81	20	7.2	4.5	5.7	——	3.3		
DF12E (4.0)-30DP-0.5V (81)	537-0555-2- 81	30	9.7	7.0	8.2	——			
DF12E (4.0)-36DP-0.5V (81)	537-0556-5- 81	36	11.2	8.5	9.7	——			
DF12E (4.0)-40DP-0.5V (81)	537-0557-8- 81	40	12.2	9.5	10.7	——			
DF12E (4.0)-50DP-0.5V (81)	537-0559-3- 81	50	14.7	12.0	13.2	——			
DF12E (4.0)-60DP-0.5V (81)	537-0561-5- 81	60	17.2	14.5	15.7	——			
DF12E (5.0)-20DP-0.5V (81)	537-0578-8- 81	20	7.2	4.5	5.7	——	4.3		
DF12E (5.0)-30DP-0.5V (81)	537-0580-0- 81	30	9.7	7.0	8.2	——			
DF12E (5.0)-36DP-0.5V (81)	537-0581-2- 81	36	11.2	8.5	9.7	——			
DF12E (5.0)-40DP-0.5V (81)	537-0582-5- 81	40	12.2	9.5	10.7	——			
DF12E (5.0)-50DP-0.5V (81)	537-0584-0- 81	50	14.7	12.0	13.2	——			
DF12E (5.0)-60DP-0.5V (81)	537-0586-6- 81	60	17.2	14.5	15.7	——			

Note : Plaese order the embossed tape packaging product per reel. (1000 pcs./reel)

The product information in this catalog is for reference only. Please request the Engineering Drawing for the most current and accurate design information.
All non-RoHS products have been discontinued, or will be discontinued soon. Please check the products status on the Hirose website RoHS search at www.hirose-connectors.com or contact your Hirose sales representative.

■Header With metal fitting

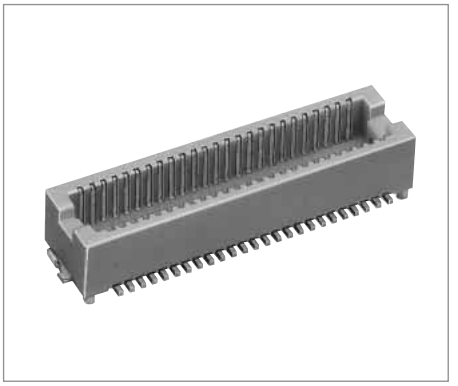

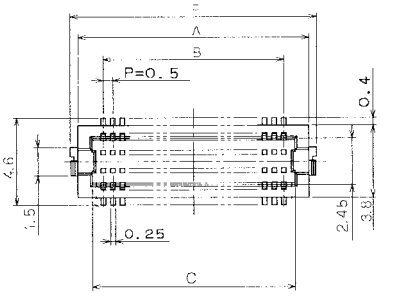

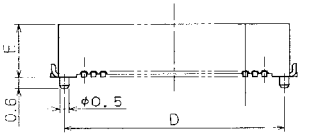

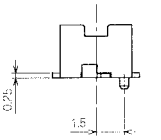

●Stacking Height: 3mm Product

Unit: mm

Part Number	CL No.	Number of Contacts	A	B	C	D	E	F	Remarks	RoHS
DF12 (3.0)-10DP-0.5V (86)	537-0721-0- 86	10	4.7	2.0	3.2	4.1	2.3	5.5	With metal fitting With boss	YES
DF12 (3.0)-14DP-0.5V (86)	537-0918-4- 86	14	5.7	3.0	4.2	5.1		6.5		
DF12 (3.0)-20DP-0.5V (86)	537-0723-5- 86	20	7.2	4.5	5.7	6.6		8.0		
DF12 (3.0)-30DP-0.5V (86)	537-0725-0- 86	30	9.7	7.0	8.2	9.1		10.5		
DF12 (3.0)-32DP-0.5V (86)	537-0732-6- 86	32	10.2	7.5	8.7	9.6		11.0		
DF12 (3.0)-36DP-0.5V (86)	537-0726-3- 86	36	11.2	8.5	9.7	10.6		12.0		
DF12 (3.0)-40DP-0.5V (86)	537-0727-6- 86	40	12.2	9.5	10.7	11.6		13.0		
DF12 (3.0)-50DP-0.5V (86)	537-0729-1- 86	50	14.7	12.0	13.2	14.1		15.5		
DF12 (3.0)-60DP-0.5V (86)	537-0731-3- 86	60	17.2	14.5	15.7	16.6		18.0		
DF12 (3.0)-80DP-0.5V (86)	537-0733-9- 86	80	22.2	19.5	20.7	21.6		23.0		
DF12 (3.0)-10DP-0.5V (86)	537-0756-4- 86	10	4.7	2.0	3.2	——	2.3	5.5	With metal fitting Without boss	
DF12 (3.0)-14DP-0.5V (86)	537-0919-7- 86	14	5.7	3.0	4.2	——		6.5		
DF12B (3.0)-20DP-0.5V (86)	537-0758-0- 86	20	7.2	4.5	5.7	——		8.0		
DF12B (3.0)-30DP-0.5V (86)	537-0760-1- 86	30	9.7	7.0	8.2	——		10.5		
DF12B (3.0)-32DP-0.5V (86)	537-0767-0- 86	32	10.2	7.5	8.7	——		11.0		
DF12B (3.0)-36DP-0.5V (86)	537-0761-4- 86	36	11.2	8.5	9.7	——		12.0		
DF12B (3.0)-40DP-0.5V (86)	537-0762-7- 86	40	12.2	9.5	10.7	——		13.0		
DF12B (3.0)-50DP-0.5V (86)	537-0764-2- 86	50	14.7	12.0	13.2	——		15.5		
DF12B (3.0)-60DP-0.5V (86)	537-0766-8- 86	60	17.2	14.5	15.7	——		18.0		
DF12B (3.0)-80DP-0.5V (86)	537-0768-3- 86	80	22.2	19.5	20.7	——		23.0		

Note : Please order the embossed tape packaging product per reel. (1000 pcs./reel)

■Header With metal fitting

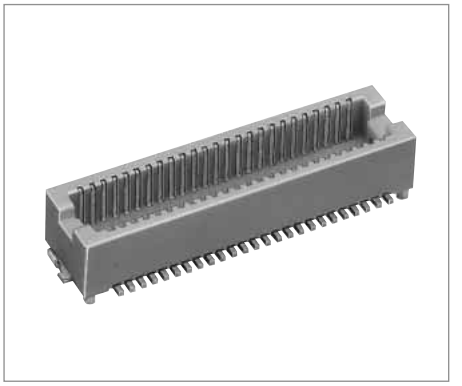

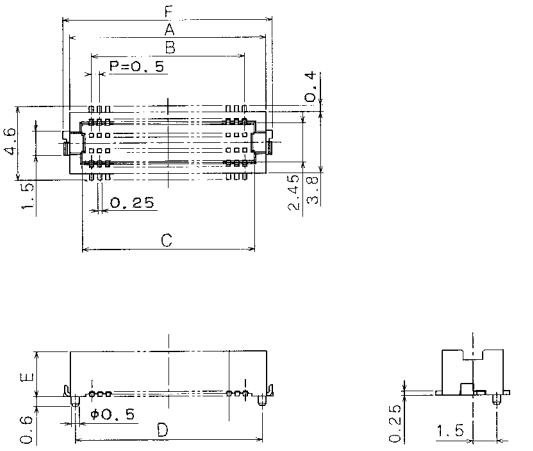

●Stacking Height: 3.5 to 5mm Product

Unit: mm

Part Number	CL No.	Number of Contacts	A	B	C	D	E	F	Remarks	RoHS
DF12 (3.5)-20DP-0.5V (86)	537-0028-7- 86	20	7.2	4.5	5.7	6.6	2.8	8.0	With metal fitting With boss	YES
DF12 (3.5)-30DP-0.5V (86)	537-0030-9- 86	30	9.7	7.0	8.2	9.1		10.5		
DF12 (3.5)-36DP-0.5V (86)	537-0031-1- 86	36	11.2	8.5	9.7	10.6		12.0		
DF12 (3.5)-40DP-0.5V (86)	537-0032-4- 86	40	12.2	9.5	10.7	11.6		13.0		
DF12 (3.5)-50DP-0.5V (86)	537-0034-0- 86	50	14.7	12.0	13.2	14.1		15.5		
DF12 (3.5)-60DP-0.5V (86)	537-0036-5- 86	60	17.2	14.5	15.7	16.6		18.0		
DF12 (4.0)-20DP-0.5V (86)	537-0053-4- 86	20	7.2	4.5	5.7	6.6	3.3	8.0		
DF12 (4.0)-30DP-0.5V (86)	537-0055-0- 86	30	9.7	7.0	8.2	9.1		10.5		
DF12 (4.0)-32DP-0.5V (86)	537-0926-2-86	32	10.2	7.5	8.7	9.6		11.0		
DF12 (4.0)-36DP-0.5V (86)	537-0056-2- 86	36	11.2	8.5	9.7	10.6		12.0		
DF12 (4.0)-40DP-0.5V (86)	537-0057-5- 86	40	12.2	9.5	10.7	11.6		13.0		
DF12 (4.0)-50DP-0.5V (86)	537-0059-0- 86	50	14.7	12.0	13.2	14.1		15.5		
DF12 (4.0)-60DP-0.5V (86)	537-0061-2- 86	60	17.2	14.5	15.7	16.6		18.0		
DF12 (5.0)-20DP-0.5V (86)	537-0153-9- 86	20	7.2	4.5	5.7	6.6	4.3	8.0		
DF12 (5.0)-30DP-0.5V (86)	537-0155-4- 86	30	9.7	7.0	8.2	9.1		10.5		
DF12 (5.0)-36DP-0.5V (86)	537-0156-7- 86	36	11.2	8.5	9.7	10.6		12.0		
DF12 (5.0)-40DP-0.5V (86)	537-0157-0- 86	40	12.2	9.5	10.7	11.6		13.0		
DF12 (5.0)-50DP-0.5V (86)	537-0159-5- 86	50	14.7	12.0	13.2	14.1		15.5		
DF12 (5.0)-60DP-0.5V (86)	537-0161-7- 86	60	17.2	14.5	15.7	16.6		18.0		
DF12B (3.5)-20DP-0.5V (86)	537-0328-0- 86	20	7.2	4.5	5.7	——	2.8	8.0	With metal fitting Without boss	
DF12B (3.5)-30DP-0.5V (86)	537-0330-2- 86	30	9.7	7.0	8.2	——		10.5		
DF12B (3.5)-36DP-0.5V (86)	537-0331-5- 86	36	11.2	8.5	9.7	——		12.0		
DF12B (3.5)-40DP-0.5V (86)	537-0332-8- 86	40	12.2	9.5	10.7	——		13.0		
DF12B (3.5)-50DP-0.5V (86)	537-0334-3- 86	50	14.7	12.0	13.2	——		15.5		
DF12B (3.5)-60DP-0.5V (86)	537-0336-9- 86	60	17.2	14.5	15.7	——		18.0		
DF12B (4.0)-20DP-0.5V (86)	537-0353-8- 86	20	7.2	4.5	5.7	——	3.3	8.0		
DF12B (4.0)-30DP-0.5V (86)	537-0355-3- 86	30	9.7	7.0	8.2	——		10.5		
DF12B (4.0)-32DP-0.5V (86)	537-0927-5-86	32	10.2	7.5	8.7	——		11.0		
DF12B (4.0)-36DP-0.5V (86)	537-0356-6- 86	36	11.2	8.5	9.7	——		12.0		
DF12B (4.0)-40DP-0.5V (86)	537-0357-9- 86	40	12.2	9.5	10.7	——		13.0		
DF12B (4.0)-50DP-0.5V (86)	537-0359-4- 86	50	14.7	12.0	13.2	——		15.5		
DF12B (4.0)-60DP-0.5V (86)	537-0361-6- 86	60	17.2	14.5	15.7	——		18.0		
DF12B (5.0)-20DP-0.5V (86)	537-0378-9- 86	20	7.2	4.5	5.7	——	4.3	8.0		
DF12B (5.0)-30DP-0.5V (86)	537-0380-0- 86	30	9.7	7.0	8.2	——		10.5		
DF12B (5.0)-36DP-0.5V (86)	537-0381-3- 86	36	11.2	8.5	9.7	——		12.0		
DF12B (5.0)-40DP-0.5V (86)	537-0382-6- 86	40	12.2	9.5	10.7	——		13.0		
DF12B (5.0)-50DP-0.5V (86)	537-0384-1- 86	50	14.7	12.0	13.2	——		15.5		
DF12B (5.0)-60DP-0.5V (86)	537-0386-7- 86	60	17.2	14.5	15.7	——		18.0		

Note : Please order the embossed tape packaging product per reel. (1000 pcs./reel)

◆Embossed Carrier tape Dimensions

●Receptacle

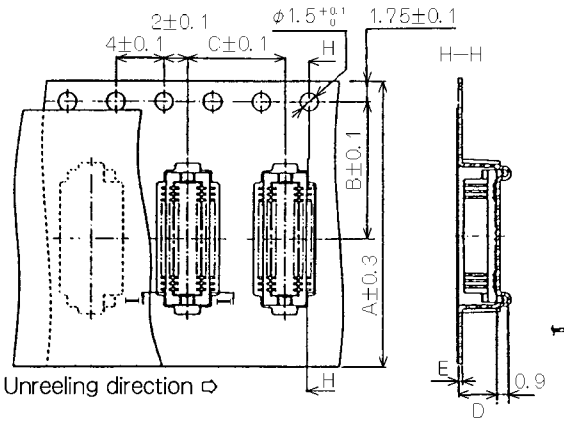

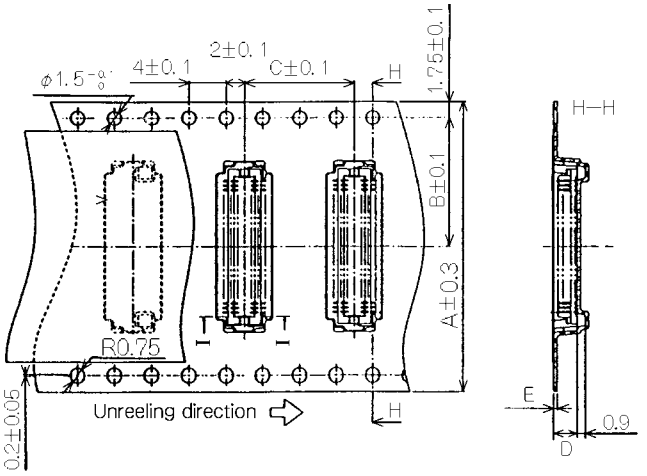

●Header

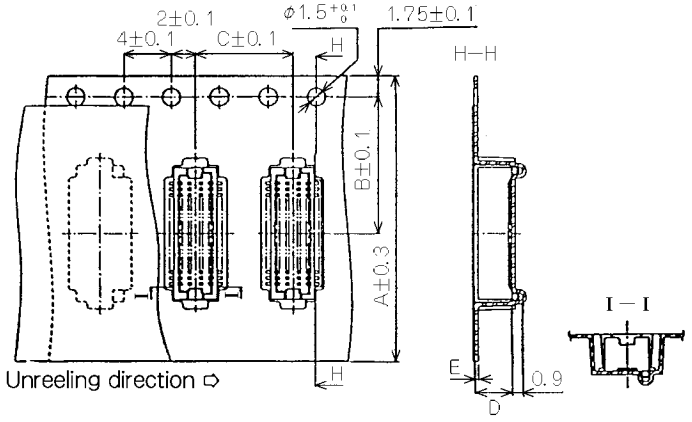

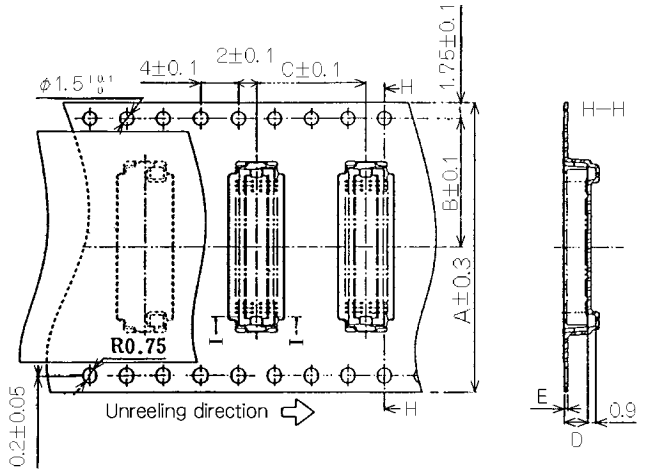

Connector	A	B	C	D	E	F	G
DF12# (3.0) -10DS-0.5V	16	7.5	12	2.6	0.30	17.5	21.5
DF12# (3.0) -14DS-0.5V	16	7.5	12	2.6	0.38	17.5	21.5
DF12# (3.0) -20DS-0.5V	16	7.5	12	2.6	0.38	17.5	21.5
DF12# (3.0) -30DS-0.5V	24	11.5	12	2.6	0.38	25.5	29.5
DF12# (3.0) -32DS-0.5V	24	11.5	12	2.6	0.38	25.5	29.5
DF12# (3.0) -36DS-0.5V	24	11.5	12	2.6	0.38	25.5	29.5
DF12# (3.0) -40DS-0.5V	24	11.5	12	2.6	0.38	25.5	29.5
DF12# (3.0) -50DS-0.5V	24	11.5	12	2.6	0.38	25.5	29.5
DF12# (3.0) -60DS-0.5V	32	14.2	12	2.6	0.38	33.5	37.5
DF12# (3.0) -80DS-0.5V	44	20.2	12	2.6	0.38	45.5	49.5
DF12# (3.0) -10DP-0.5V	16	7.5	12	2.6	0.30	17.5	21.5
DF12# (3.0) -14DP-0.5V	16	7.5	12	2.6	0.38	17.5	21.5
DF12# (3.0) -20DP-0.5V	16	7.5	12	2.6	0.38	17.5	21.5
DF12# (3.0) -30DP-0.5V	24	11.5	12	2.6	0.38	25.5	29.5
DF12# (3.0) -32DP-0.5V	24	11.5	12	2.6	0.38	25.5	29.5
DF12# (3.0) -36DP-0.5V	24	11.5	12	2.6	0.38	25.5	29.5
DF12# (3.0) -40DP-0.5V	24	11.5	12	2.6	0.38	25.5	29.5
DF12# (3.0) -50DP-0.5V	24	11.5	12	2.6	0.38	25.5	29.5
DF12# (3.0) -60DP-0.5V	32	14.2	12	2.6	0.38	33.5	37.5
DF12# (3.0) -80DP-0.5V	44	20.2	12	2.6	0.38	45.5	49.5
DF12#-20DS-0.5V	16	7.5	12	3.1	0.38	17.5	21.5
DF12#-30DS-0.5V	24	11.5	12	3.1	0.38	25.5	29.5
DF12#-32DS-0.5V	24	11.5	12	3.1	0.30	25.5	29.5
DF12#-36DS-0.5V	24	11.5	8	3.1	0.30	25.5	29.5
DF12#-40DS-0.5V	24	11.5	12	3.1	0.38	25.5	29.5
DF12#-50DS-0.5V	24	11.5	8	3.1	0.30	25.5	29.5
DF12#-60DS-0.5V	32	14.2	12	3.1	0.38	33.5	37.5

Connector	A	B	C	D	E	F	G
DF12# (3.5) -20DP-0.5V	16	7.5	12	3.1	0.38	17.5	21.5
DF12# (3.5) -30DP-0.5V	24	11.5	12	3.1	0.38	25.5	29.5
DF12# (3.5) -36DP-0.5V	24	11.5	8	3.1	0.30	25.5	29.5
DF12# (3.5) -40DP-0.5V	24	11.5	12	3.1	0.38	25.5	29.5
DF12# (3.5) -50DP-0.5V	24	11.5	8	3.1	0.30	25.5	29.5
DF12# (3.5) -60DP-0.5V	32	14.2	12	3.1	0.38	33.5	37.5
DF12# (3.5) -20DP-0.5V	16	7.5	12	3.6	0.38	17.5	21.5
DF12# (4.0) -30DP-0.5V	24	11.5	12	3.6	0.38	25.5	29.5
DF12# (4.0) -32DP-0.5V	24	11.5	12	3.6	0.30	25.5	29.5
DF12# (4.0) -36DP-0.5V	24	11.5	8	3.6	0.30	25.5	29.5
DF12# (4.0) -40DP-0.5V	24	11.5	12	3.6	0.38	25.5	29.5
DF12# (4.0) -50DP-0.5V	24	11.5	8	3.6	0.30	25.5	29.5
DF12# (4.0) -60DP-0.5V	32	14.2	12	3.6	0.38	33.5	37.5
DF12# (5.0) -20DP-0.5V	16	7.5	12	4.6	0.38	17.5	21.5
DF12# (5.0) -30DP-0.5V	24	11.5	12	4.6	0.38	25.5	29.5
DF12# (5.0) -36DP-0.5V	24	11.5	12	4.6	0.38	25.5	29.5
DF12# (5.0) -40DP-0.5V	24	11.5	12	4.6	0.38	25.5	29.5
DF12# (5.0) -50DP-0.5V	24	11.5	8	4.6	0.30	25.5	29.5
DF12# (5.0) -60DP-0.5V	32	14.2	12	4.6	0.38	33.5	37.5

The product information in this catalog is for reference only. Please request the Engineering Drawing for the most current and accurate design information.
All non-RoHS products have been discontinued, or will be discontinued soon. Please check the products status on the Hirose website RoHS search at www.hirose-connectors.com, or contact your Hirose sales representative.

●Reel Dimensions

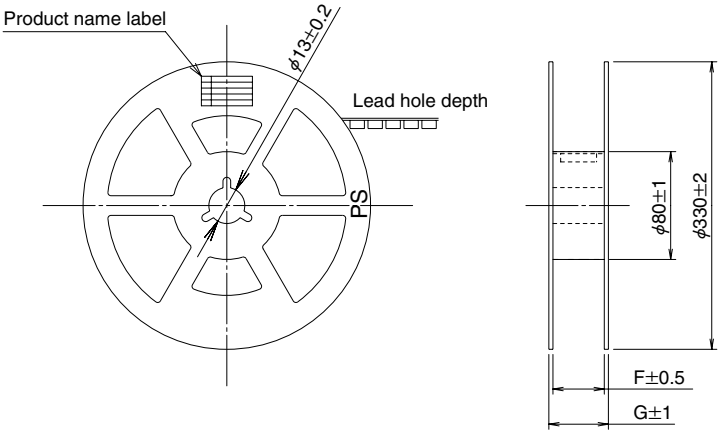

Refer to former page for F, G dimensions.

◆Recommended PCB mounting pattern

■DF12 with metal fitting

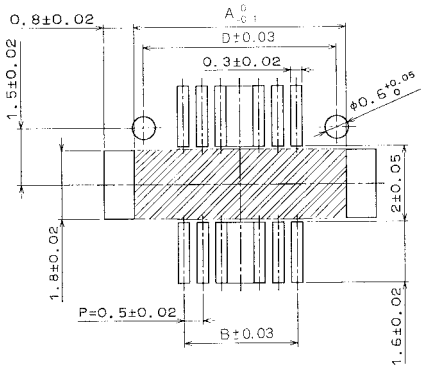

■DF12 without metal fitting

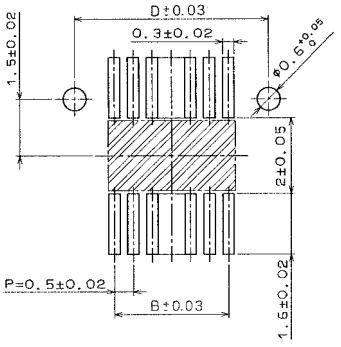

Note 1 : Refer to A195 to A200 for sides A, B, and D.

Note 2 : If the boss isn't included, the boss shown in the above figure isn't required.

Note 3 : ▨ If the pattern is included in the shaded area, and not treated with resist, it could touch the connector contact .

The product information in this catalog is for reference only. Please request the Engineering Drawing for the most current and accurate design information.
All non-RoHS products have been discontinued, or will be discontinued soon. Please check the products status on the Hirose website RoHS search at www.hirose-connectors.com, or contact your Hirose sales representative.

◆Precautions for Use

1.Recommended Temperature Profile (SMT)	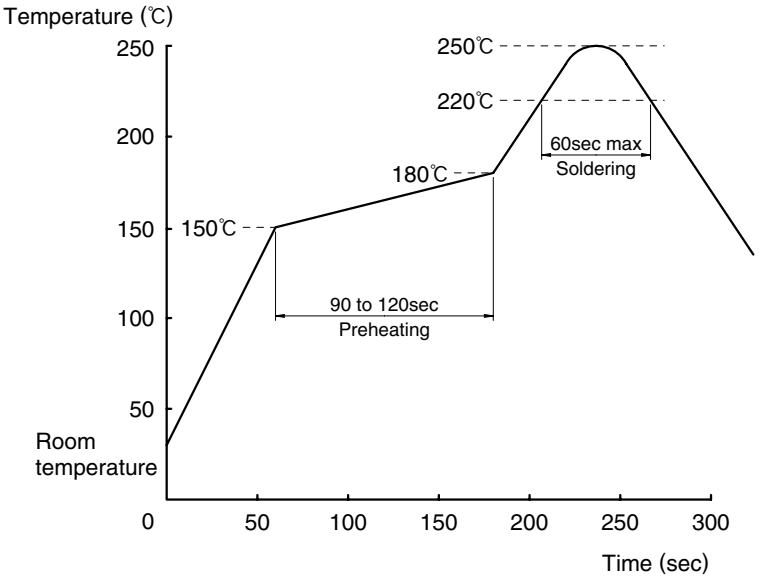 Note1: UP to 2 cycles of Reflow soldering are possible under the same conditions, provided that there is a return to normal temperature between the first and second cycle. Note2: The temperature profile indicates the board surface temperature at the point of contacts with the connector terminals.
2.Recommended Manual Soldering Condition (SMT)	Soldering iron temperature: 350℃, Soldering time: Within 3 seconds
3.Recommended Screen Thickness and open area ratio(Pattern area ratio)	0.12mm Open area ratio: 70%
4.Board Warp(SMT)	Maxmum 0.02mm in the connector center area, based on both connector edges
5.Cleaning Condition	Refer to "Nylon Connector Use Hand book".
6.Cautions	■ The receptacle is designed in a structure where contacts are exposed. Touching it with bare hands would cause contact failure or electrostatic element damage. ■ Where no board is mounted, the insertion or extraction will cause damage or contact deformation. ■ Avoid retaining the board with the connector only, and fix the board by any other means than the connector. ■ Excessive scoop insertion or extraction may result in damage. ■ In the manual soldering process, don't carry out the flux coating which will cause a flux blister on the connector. ■ The color phase of this product may be slightly different from that of the formed product according to the manufacturing lot. However, the difference doesn't affect the performance.

Mouser Electronics

Authorized Distributor

Click to View Pricing, Inventory, Delivery & Lifecycle Information:

Hirose Electric:

DF12-20DS-0.5V(48) DF12-20DS-0.5V(86) DF12-30DS-0.5V(86) DF12-36DS-0.5V(86) DF12-40DS-0.5V(86) DF12-50DS-0.5V(86) DF12-60DS-0.5V(86) DF12-32DS-0.5V(86) DF12(3.5)-20DP-0.5V(86) DF12(3.5)-30DP-0.5V(86) DF12(3.5)-36DP-0.5V(86) DF12(3.5)-40DP-0.5V(86) DF12(3.5)-50DP-0.5V(86) DF12(3.5)-60DP-0.5V(86) DF12(4.0)-20DP-0.5V(86) DF12(4.0)-30DP-0.5V(86) DF12(4.0)-36DP-0.5V(86) DF12(4.0)-40DP-0.5V(86) DF12(4.0)-50DP-0.5V(86) DF12(4.0)-60DP-0.5V(86) DF12A-20DS-0.5V(81) DF12A-30DS-0.5V(80) DF12A-30DS-0.5V(81) DF12A-36DS-0.5V(81) DF12A-40DS-0.5V(81) DF12A-50DS-0.5V(80) DF12A-50DS-0.5V(81) DF12A-60DS-0.5V(81) DF12A-32DS-0.5V(80) DF12A-32DS-0.5V(81) DF12(4.5)-40DP-0.5V(86) DF12(5.0)-20DP-0.5V(86) DF12(5.0)-30DP-0.5V(86) DF12(5.0)-36DP-0.5V(86) DF12(5.0)-40DP-0.5V(86) DF12(5.0)-50DP-0.5V(86) DF12(5.0)-60DP-0.5V(86) DF12C-20DS-0.5V(81) DF12C-30DS-0.5V(81) DF12C-36DS-0.5V(81) DF12C-40DS-0.5V(81) DF12C-50DS-0.5V(80) DF12C-50DS-0.5V(81) DF12C-60DS-0.5V(80) DF12C-60DS-0.5V(81) DF12C-32DS-0.5V(81) DF12B-20DS-0.5V(86) DF12B-30DS-0.5V(86) DF12B-36DS-0.5V(86) DF12B-40DS-0.5V(86) DF12B-50DS-0.5V(86) DF12B-60DS-0.5V(86) DF12B-32DS-0.5V(86) DF12B(3.5)-20DP-0.5V(86) DF12B(3.5)-30DP-0.5V(86) DF12B(3.5)-36DP-0.5V(86) DF12B(3.5)-40DP-0.5V(80) DF12B(3.5)-40DP-0.5V(86) DF12B(3.5)-50DP-0.5V(86) DF12B(3.5)-60DP-0.5V(86) DF12B(4.0)-20DP-0.5V(86) DF12B(4.0)-30DP-0.5V(86) DF12B(4.0)-36DP-0.5V(86) DF12B(4.0)-40DP-0.5V(86) DF12B(4.0)-50DP-0.5V(86) DF12B(4.0)-60DP-0.5V(86) DF12B(5.0)-20DP-0.5V(86) DF12B(5.0)-30DP-0.5V(86) DF12B(5.0)-36DP-0.5V(86) DF12B(5.0)-40DP-0.5V(86) DF12B(5.0)-50DP-0.5V(86) DF12B(5.0)-60DP-0.5V(86) DF12D(3.5)-20DP-0.5V(81) DF12D(3.5)-30DP-0.5V(80) DF12D(3.5)-30DP-0.5V(81) DF12D(3.5)-36DP-0.5V(81) DF12D(3.5)-40DP-0.5V(81) DF12D(3.5)-50DP-0.5V(81) DF12D(3.5)-60DP-0.5V(81) DF12D(4.0)-20DP-0.5V(80) DF12D(4.0)-20DP-0.5V(81) DF12D(4.0)-30DP-0.5V(81) DF12D(4.0)-36DP-0.5V(81) DF12D(4.0)-40DP-0.5V(81) DF12D(4.0)-50DP-0.5V(81) DF12D(4.0)-60DP-0.5V(81) DF12D(5.0)-20DP-0.5V(81) DF12D(5.0)-30DP-0.5V(80) DF12D(5.0)-30DP-0.5V(81) DF12D(5.0)-36DP-0.5V(81) DF12D(5.0)-40DP-0.5V(81) DF12D(5.0)-50DP-0.5V(81) DF12D(5.0)-60DP-0.5V(81) DF12E(3.5)-20DP-0.5V(81) DF12E(3.5)-30DP-0.5V(81) DF12E(3.5)-36DP-0.5V(81) DF12E(3.5)-40DP-0.5V(80) DF12E(3.5)-40DP-0.5V(81) DF12E(3.5)-50DP-0.5V(81) DF12E(3.5)-60DP-0.5V(80)