NYLON 6/6 (RMS-01) COLOR: NATURAL PART NO.	FLAME RET. (RMS-19) COLOR: NATURAL PART NO.	DIM. "A"
DLCBS3-3-01	DLCBS3-3-19	3/16 (4.8)
DLCBS3-4-01	DLCBS3-4-19	1/4 (6.4)
DLCBS3-6-01	DLCBS3-6-19	3/8 (9.5)
DLCBS3-8-01	DLCBS3-8-19	1/2 (12.7)
DLCBS3-10-01	DLCBS3-10-19	5/8 (15.9)
DLCBS3-12-01	DLCBS3-12-19	3/4 (19.1)
DLCBS3-14-01	DLCBS3-14-19	7/8 (22.2)

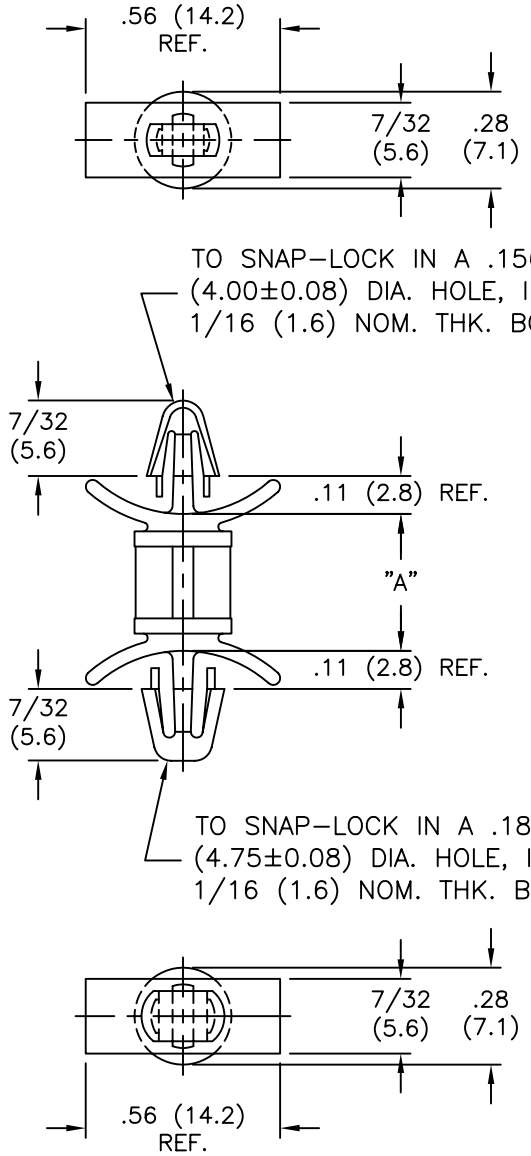

NOTES:

1. IMPACT MODIFIED NYLON (RMS-73),
   COLOR: NATURAL.
   AVAILABLE BY SPECIAL ORDER ONLY;
   TO ORDER USE P/N DLCBS3-X-73.

   UV STABILIZED NYLON (RMS-46),
   COLOR: BLACK,
   AVAILABLE BY SPECIAL ORDER ONLY;
   TO ORDER USE P/N DLCBS3-X-UVB.

REV	DESCRIPTION	ENGR DATE
E	UPDATED NOTES AND TABLE	S.M. 04.05.02
D	CHANGED FILE NO. AND TITLE BLOCK	S.M. 04.27.01
C	MAT'L RMS-46 ADDED	J.L. 7.7.99
B	MAT'L RMS-19 ADDED	J.L. 12.19.97
A	CONVERTED TO ACAD	P.B. 03.06.95

TITLE: DUAL LOCKING CIRCUIT BOARD SUPPORT, TYPE 3

DWG IN IN (MM)

TOLERANCES UNLESS NOTED
.XX=±.010
.XXX=±.005
FRAC=1/64
ANG=1°

FILE # DLCBS3
MAT'L: SEE TABLE
RE: RICHCO, INC.

DWN: P.B.
DT: 03-06-95

APP:
DT:

RICHCO INC.
PO BOX 804238,CHICAGO,60680
(773) 539-4060

FINAL

PART # DLCBS3-SERIES

PRINT TYPE CA