THIS DRAWING IS UNPUBLISHED. RELEASED FOR PUBLICATION 20

© COPYRIGHT 20 BY TYCO ELECTRONICS CORPORATION. ALL RIGHTS RESERVED.

PART NUMBER	REV	FIRST USED	POWER UNIT	FEED TYPE	DESCRIPTION
1855589-2	C	565435-5	BENCH MODEL K	AIR FEED	CUTS CARRIER
1855589-3	C	354500-1	BENCH MODEL G	AIR FEED	CUTS CARRIER
7-1855589-7	A	-	-	-	SPARE PARTS

LOC	DIST
A	66

REVISIONS

P	LTR	DESCRIPTION	DATE	DWN	APVD
	C	ECR-11-022488	04NOV2011	RK	GB

1. RECOMMENDED SPARE PARTS
2. GREASE LIGHTLY
3. GUARD MUST BE IN PLACE WHEN OPERATING APPLICATOR IN A BENCH MACHINE

4. WIRES MUST BE PREFORMED TO ALIGN WITH WIRE BARREL OF TERMINALS BEFORE CRIMPING.

* WARNING
ON INSTALLATION, SET WIRE DISC TO LARGEST WIRE SIZE SETTING. USE OF SETTINGS BELOW MIN. REQUIRED CRIMP HEIGHT SETTING WILL CAUSE DAMAGE TO CRIMP TOOLING.

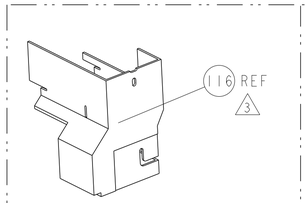

AMP-O-LECTRIC TERM GUARD

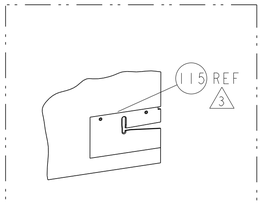

G TERMINATOR GUARD

TERMINAL NAME: MICRO QUADLOK SYSTEM

TE PN	-	TE TERMINAL - TE CRIMP SPECS			
PIN	SOCKET				
293389	293390	CRIMP HEIGHT		WIRE SIZE	REF SETTING
-	-	1.07mm+.03/-.03[.042+.001/-.001]		18AWG	C6
-	-			-	-
-	-			-	-
-	-			-	-
-	-	CRIMP	SIZE	TYPE	RANGE
-	-				
-	-	WIRE	1.57mm [.062]	F	18 AWG
-	-	INSUL		-	
WIRE STRIP LENGTH	TERM APPL SPEC	FEED	APPLICATOR INSTRUCTIONS		SET UP GAGE
2.85-3.15	114-21150	7.00	408-8040		-

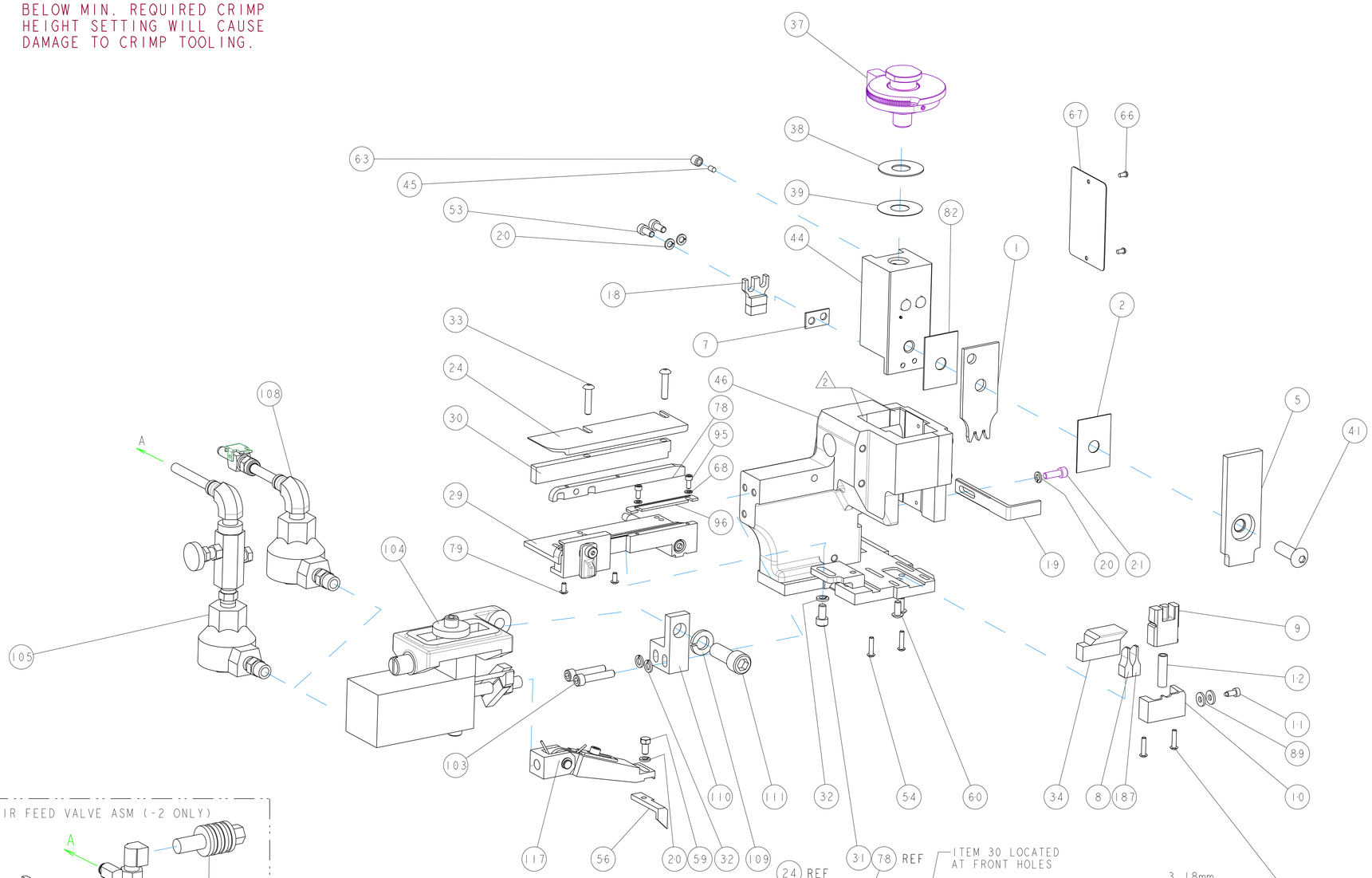

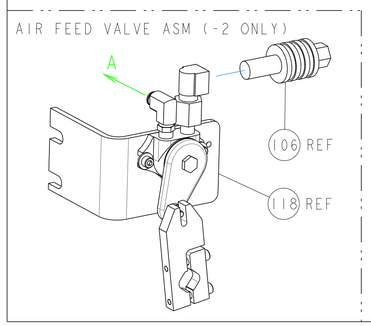

-77	-3	-2	U/M	PART NO	DESCRIPTION	ITEM NO
1	1	1	-	1633572-8	ANVIL, WIRE	187
-	-	REF	-	692655-6	AIR FEED VALVE ASSEMBLY	118
-	1	1	-	461062-1	FEED FINGER ASSEMBLY	117
-	-	REF	..	455749-1	GUARD WINDOW	116
-	REF	-	..	679532-1	INSERT, GUARD	115
-	1	1	-	3-21001-5	SCR, SKT HD CAP 3/8-16 X 1.000	111
-	1	1	-	459610-1	MOUNT, FEED BRACKET	110
-	1	1	-	21024-8	WASHER, SPRG LOCK, REG 3/8	109
-	1	-	-	692655-7	AIR FEED VALVE ASSEMBLY	108
-	-	REF	-	24024-2	VALVE, SHUT OFF	106
-	-	1	-	692655-5	AIR FEED VALVE ASSEMBLY	105
-	1	1	-	461065-1	ASSEMBLY, AIR FEED	104
-	2	2	-	3-21000-9	SCR, SKT HD CAP 10-32 X 1.000	103
-	1	1	-	690438-1	FRONT STRIP GUIDE	96
-	2	2	-	1-21000-3	SCR, SKT HD CAP 4-40 X .250	95
-	2	2	-	21899-1	WASHER, FLAT	89
-	1	1	-	455888-8	SPACER, CRIMPER	82
-	2	2	-	1-21002-3	SCR, BTN SKT HD CAP 4-40 X .250	79
-	1	1	-	189807-5	FENCE	78
-	1	1	-	4088040	SF APPL INST 408-8040	72
-	1	1	-	217238-1	GENERAL INSTRUCTION PKG	71
-	2	2	-	21024-2	WASHER, SPRG LOCK, REG NO 4	68
-	1	1	-	461264-5	PLATE, IDENTIFICATION	67
-	2	2	-	21017-2	SCREW, DRIVE	66
-	1	1	-	21009-2	SCR, SET, SELF LOCKING 1/4-20 X .250	63
-	2	2	-	22733-8	SCR, BHSC, SELF-LOCKING, 8-32 X .375	60
-	1	1	-	2-22603-0	SCR, HEX HD CAP 8-32 X .312	59
-	1	1	-	3-694433-7	FEED PAWL	56
-	4	4	-	1-21002-5	SCR, BTN SKT HD CAP 4-40 X .500	54
-	2	2	-	2-21000-6	SCR, SKT HD CAP 8-32 X .375	53
-	1	1	-	1-1633399-0	APPL., BASIC AIR FEED SUB ASSY	46
-	1	1	-	690191-1	PLUG,NYLON	45
-	1	1	-	455673-6	RAM, SIDE FEED	44
-	1	1	-	7-21002-9	SCR, BTN SKT HD CAP 5/16-24 X 1.00	41
-	1	1	-	690125-1	SHIM SUB-ASSY	39
-	1	1	-	469367-8	SHIM	38
-	1	1	-	879103-4	FINE ADJUST HEAD ASSEMBLY	37
-	1	1	-	2161254-1	SUPPORT, TERMINAL HOLD DOWN	34
-	2	2	-	2-21002-4	SCR, BTN SKT HD CAP 8-32 X .750	33
-	3	3	-	21024-5	WASHER, SPRG LOCK, REG NO 10	32
-	1	1	-	3-21000-4	SCR, SKT HD CAP 10-32 X .375	31
-	1	1	-	1320908-4	SPACER, STRIP GUIDE	30
-	1	1	-	2-1633091-2	ASSEMBLY, STRIP GUIDE	29
-	1	1	-	1320928-1	PLATE, STRIP GUIDE	24
-	1	1	-	2-21000-7	SCR, SKT HD CAP 8-32 X .500	21
-	4	4	-	21024-4	WASHER, SPRG LOCK, REG NO 8	20
-	1	1	-	3-690472-2	STRIPPER	19
-	1	1	-	189369-1	HOLD DOWN, TERMINAL	18
-	1	1	-	3-22280-3	SPRING, COMPRESSION	12
-	1	1	-	690461-2	STOP, SHEAR	11
-	1	1	-	686859-6	SHEAR HOLDER, FRONT	10
-	1	1	-	2161251-1	FLOATING SHEAR, FRONT	9
1	1	1	-	1633572-7	ANVIL, WIRE	8
-	1	1	-	3-240641-4	SPACER	7
-	-	-	..	-	-	6
-	1	1	-	1633970-2	DEPRESSOR, SHEAR	5
-	-	-	..	-	-	4
-	-	-	..	-	-	3
-	1	1	-	455888-5	SPACER, CRIMPER	2
1	1	1	-	1803022-1	CRIMPER, DUAL WIRE	1

THIS DRAWING IS A CONTROLLED DOCUMENT FOR TYCO ELECTRONICS CORPORATION. IT IS SUBJECT TO CHANGE AND THE CONTROLLING ENGINEERING ORGANIZATION SHOULD BE CONTACTED FOR THE LATEST REVISION.

DIMENSIONS: INCHES

TOLERANCES UNLESS OTHERWISE SPECIFIED:
0 PLC ±-
1 PLC ±0.1
2 PLC ±0.01
3 PLC ±0.001
4 PLC ±0.0001
ANGLES ±-

MATERIAL - -
FINISH - -

DWN 03AUG2011 R.KNEPPER
CHK 03AUG2011 G.BAILEY
APVD 03AUG2011 I.CRUZ
PRODUCT SPEC -
APPLICATION SPEC -
WEIGHT -

TE Connectivity
Harrisburg, PA 17105-3608

NAME
FINE ADJUST SIDE FEED
HDM APPLICATOR
-

SIZE	CAGE CODE	DRAWING NO	RESTRICTED TO
A1	00779	C-1855589	-

CUSTOMER ACCESSIBLE PRODUCTION DRAWING | SCALE 3:5 | SHEET 1 OF 1 | REV C

Mouser Electronics

Authorized Distributor

Click to View Pricing, Inventory, Delivery & Lifecycle Information:

TE Connectivity:

1855589-3