MOLEX P/N						CIRCUITS	DIMENSION			15	14	13	12	11	10	9	8	7	6	5	4	3	2	1
WHITE	BLACK	RED	BLUE	YELLOW	GREEN		DIM A	DIM B	DIM C															
48104-0220	48104-0221	48104-0222	48104-0223	48104-0224	48104-0225	2	7.50	3.50	6.50														K1	K1
48104-0320	48104-0321	48104-0322	48104-0323	48104-0324	48104-0325	3	10.00	5.00	8.00													K1	O	K1
48104-0420	48104-0421	48104-0422	48104-0423	48104-0424	48104-0425	4	12.50	7.50	10.50												K1	O	O	K1
48104-0520	48104-0521	48104-0522	48104-0523	48104-0524	48104-0525	5	15.00	10.00	13.00											K1	O	O	O	K1
48104-0620	48104-0621	48104-0622	48104-0623	48104-0624	48104-0625	6	17.50	12.50	15.50										K1	O	O	O	O	K1
48104-0720	48104-0721	48104-0722	48104-0723	48104-0724	48104-0725	7	20.00	15.00	18.00									K1	O	O	O	O	O	K1
48104-0820	48104-0821	48104-0822	48104-0823	48104-0824	48104-0825	8	22.50	17.50	20.50								K1	O	O	O	O	O	O	K1
48104-0920	48104-0921	48104-0922	48104-0923	48104-0924	48104-0925	9	25.00	20.00	23.00							K1	O	O	O	O	O	O	O	K1
48104-1020	48104-1021	48104-1022	48104-1023	48104-1024	48104-1025	10	27.50	22.50	25.50						K1	O	O	O	O	O	O	O	O	K1
48104-1120	48104-1121	48104-1122	48104-1123	48104-1124	48104-1125	11	30.00	25.00	28.00					K1	O	O	O	O	O	O	O	O	O	K1
48104-1220	48104-1221	48104-1222	48104-1223	48104-1224	48104-1225	12	32.50	27.50	30.50				K1	O	O	O	O	O	O	O	O	O	O	K1
48104-1320	48104-1321	48104-1322	48104-1323	48104-1324	48104-1325	13	35.00	30.00	33.00			K1	O	O	O	O	O	O	O	O	O	O	O	K1
48104-1420	48104-1421	48104-1422	48104-1423	48104-1424	48104-1425	14	37.50	32.50	35.50		K1	O	O	O	O	O	O	O	O	O	O	O	O	K1
48104-1520	48104-1521	48104-1522	48104-1523	48104-1524	48104-1525	15	40.00	35.00	38.00	K1	O	O	O	O	O	O	O	O	O	O	O	O	O	K1

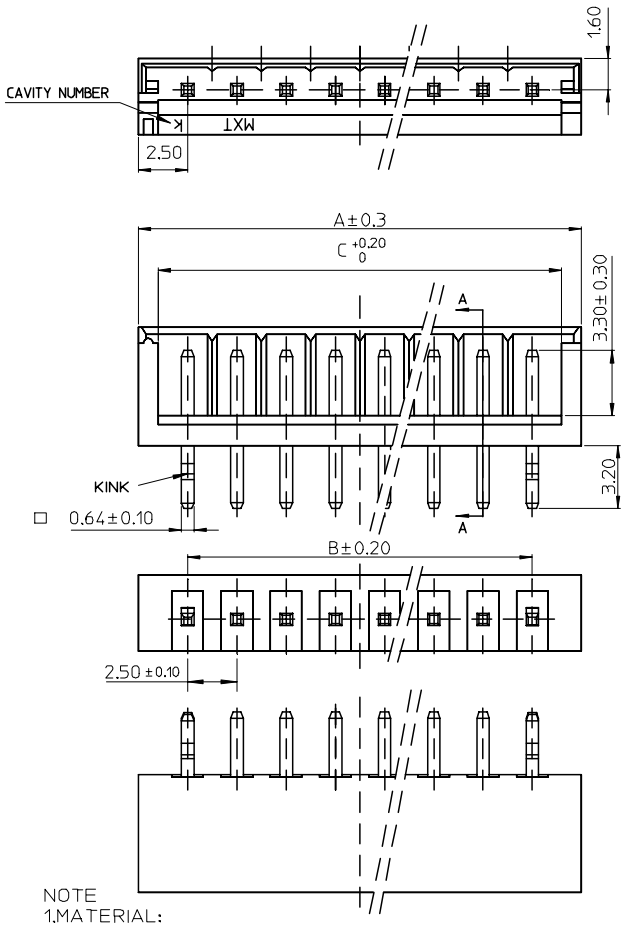

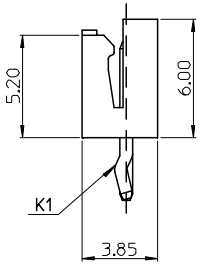

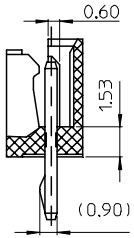

SECTION A-A

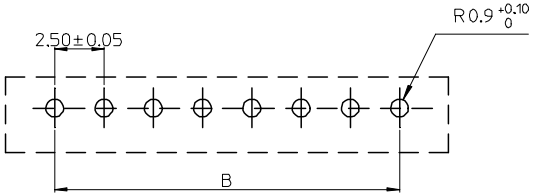

RECOMMENDED PCB LAYOUT
THICKNESS=1.60± 0.05

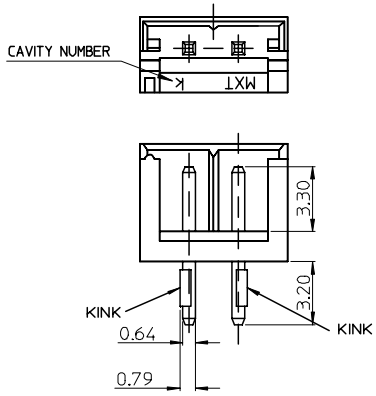

NOTES: 1, THIS IS DETAIL DRAWING FOR 2 PIN.
2, IT IS DISTINCT TO PUNCH KINK WITH OTHER PINS.

NOTE
1.MATERIAL:
HOUSING:NYLON66 GLASS FILLED ,UL94V-0
COLOR: SEE TABLE
CONTACT:BRASS
2.FINISH:
2 MICROMETER (Min.) Ni UNDERPLATE ALL OVER
2~3 MICROMETER TIN PLATING ALL OVER.
3.SPECIFICATION:
CURRENT RATING:250V:DC/AC,3A
DIELECTRIC WITHSTANDING STRENGTH:800V AC FOR1MIN
4.PACKAGE: REFER TO PK-48104-002.
5.PRODUCT SPEC: REFER TO PS-48104-001.
6.TEST SUMMARY: REFER TO TS-48104-002.
7.MATE WITH HOUSING 48103 SERIES
8.MATE WITH TERMINAL 48102 SERIES

REV	DESCRIPTION
REVISED	
EC NO: SH2006-0131	2005/09/13
DRWN:EKA001	2005/09/13
CHKD:	2005/09/14
APPR:WMSCHANG	

QUALITY SYMBOLS
▼=0
▽=0

GENERAL TOLERANCES (UNLESS SPECIFIED)

	mm	INCH
4 PLACES	± ---	± ---
3 PLACES	± ---	± ---
2 PLACES	± 0.25	± ---
1 PLACE	± 0.25	± ---
ANGULAR ± 3 °		

DRAFT WHERE APPLICABLE MUST REMAIN WITHIN DIMENSIONS

DIMENSION STYLE: MM ONLY
SCALE: 1:1
DESIGN UNITS: METRIC
THIRD ANGLE PROJECTION

DRAWN BY: JG.WEN DATE: 2004/02/26
CHECKED BY: SAM SHIN DATE: 2004/02/26
APPROVED BY: WILSON DATE: 2004/02/26

TITLE: 2.5 MM PITCH WIRE TO BOARD HEAD ASSEMBLY (VERTICAL TYPE)

MOLEX INCORPORATED

MATERIAL NO.: SEE TABLE
DOCUMENT NO.: SD-48104-002
SHEET NO.: 1 OF 1
SIZE: A3

THIS DRAWING CONTAINS INFORMATION THAT IS PROPRIETARY TO MOLEX INCORPORATED AND SHOULD NOT BE USED WITHOUT WRITTEN PERMISSION