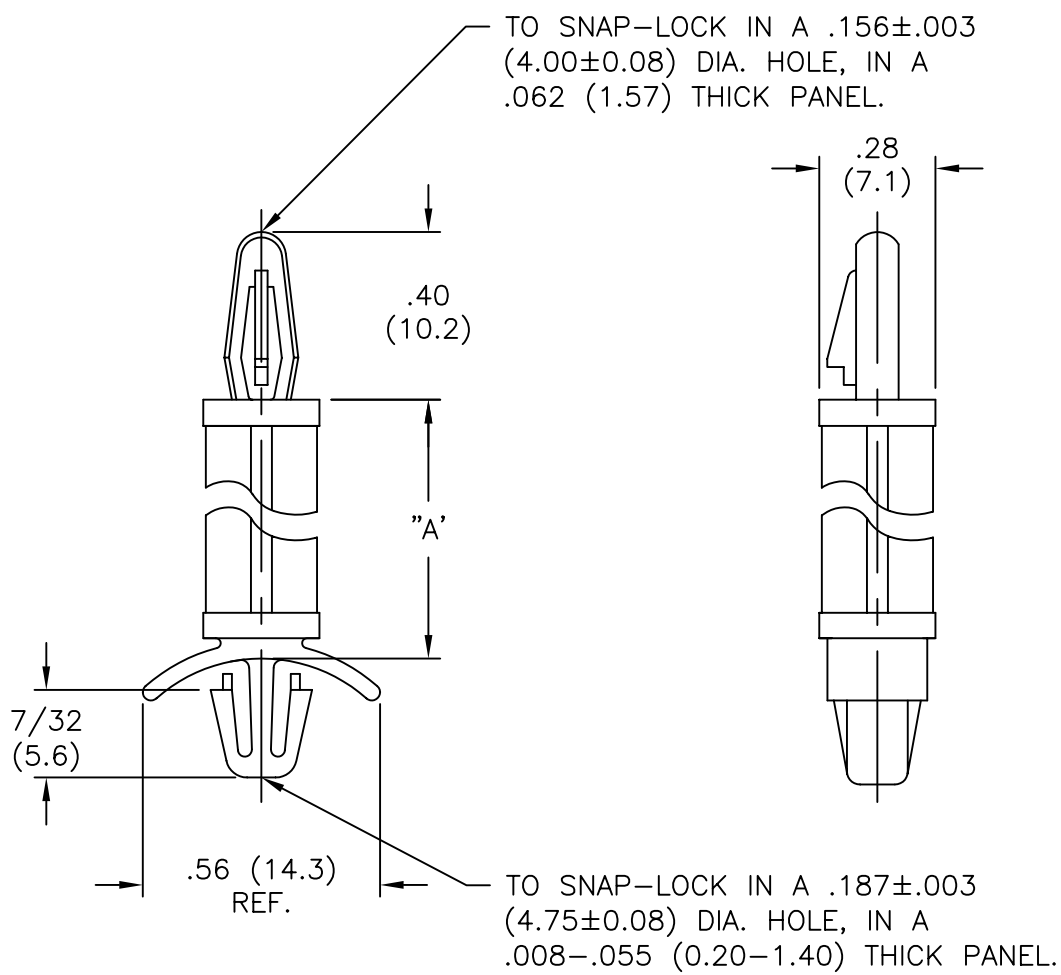

PART NO.	DIM "A" ±.015 (±0.4)
LCBS–8–3–01	3/16 (4.8)
LCBS–8–4–01	1/4 (6.4)
LCBS–8–5–01	5/16 (7.9)
LCBS–8–6–01	3/8 (9.5)
LCBS–8–7–01	7/16 (11.1)
LCBS–8–8–01	1/2 (12.7)
LCBS–8–10–01	5/8 (15.9)
LCBS–8–12–01	3/4 (19.1)
LCBS–8–14–01	7/8 (22.2)
LCBS–8–16–01	1.0 (25.4)
LCBS–8–18–01	1–1/8 (28.6)
LCBS–8–20–01	1–1/4 (31.7)
LCBS–8–22–01	1–3/8 (34.9)

NOTES:
1. MATERIAL: NYLON 6/6 (RMS–01).
   FLAME RETARDANT, NYLON (RMS–19).
   AVAILABLE BY SPECIAL ORDER ONLY.
2. COLOR: NATURAL.

REV	DESCRIPTION	ENGR DATE
A	UPDATED PRINT AND CHANGED FILE NO.	SM 10.01.01

TITLE: LOCKING CIRCUIT BOARD SUPPORT

DWG IN IN (MM)

TOLERANCES UNLESS NOTED
.XX=±.010
.XXX=±.005
FRAC=±1/64
ANG=±1°

FILE # LCBS–8
MAT'L: SEE NOTES
RE: RICHCO, INC.

DWN: J.B.
DT: 01–24–97
APP:
DT:

RICHCO INC.
PO BOX 804238,CHICAGO,60680
(773) 539–4060

FINAL

PART # SEE TABLE

PRINT TYPE CA