SPECIFICATIONS
FOR

PRODUCT NAME : Automatically small horizontal Vibration detection switch

TYPE NAME : D7A－1

ISSUED : S. Kanda April 21. 1999

CHECKED : S. Mori April 21. 1999

APROVED : R. Yamane Apr. 22. '99

OMRON Corporation

1. Mechanism parameter

(1) Dimentions

DRWG. No. 6421444-0

(2) Structure

The contact of the built-in switch is mechanically opened and close by the vibration of the earthquake wave and it is the mechanism which takes out the signal.

(3) Protection structure

The switch is assumed to be IP40.

(4) Set sensitivity

90-170 cm/s²(Gal) (Depend on the horizontal, continuous excitation method of 0.3, 0.5, and 0.7 cycle seconds).

The above-mentioned sensitivity is a value by which it is set to operate by the earth quake waves (80-250 cm/s²) in the seismic intensity aiming.

(5) Return mechanism

Automatic return type

(6) Installation level allowance value

The installation level allowance value of the device which builds in this item while installed normal is assumed ± 5 degrees or less.

(7) Point of contact form

Excite horizontally and turn ON in the range of set sensitivity.

(8) The horizontal return time

Time from the fixation of the device which builds in this item in the installation level allowance value to the normal return of the switch circuit is made within 20 seconds. (However, 10℃ or more)

(9) Circuit return time

Time until the switch circuit returns original after the vibration stops is made within one minute.

(10) Installation method

Please install this item on the PCB(t=1.6mm). (See right pictture).

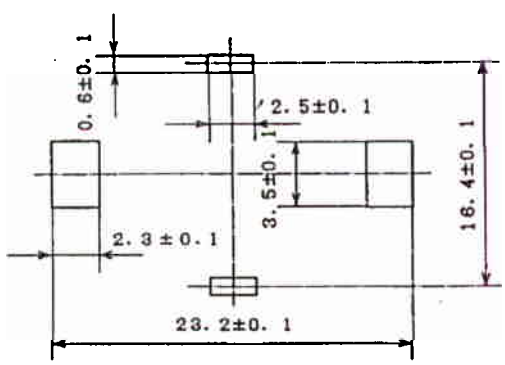

(11) Soldering

Dip soldering:temperature 270℃ 4sec MAX.

Soldering iron:temperature 350±10℃ 3sec MAX.

2. Electric specification

(1) Electric ratings

DC3V, 5μA～DC3V, 1mA

(2) Insulation resistance

100MΩ or more (DC250VM).

Between each terminal and earth terminal, between the same pole terminals.

(3) Voltage
AC250V, 50/60Hz 1 minute (between each terminal and earth between the same pole terminals).

(4) Contact resistance
Below initial 1Ω (terminal)

3. Mechanical specification
(1) Transportation vibration
Satisfy an initial value after exciting in half amplitude 2.5mm, the vibration frequency 10Hz, and the direction of three axes for 20 minutes or more.

(2) Endurance impact
⚠ Do not provide the obstacle as a function after impressing the acceleration of 980m/s² in the direction of three axes continuousness three times.

(3) Transportation impact
Satisfy an initial value after 1 corner, 3 arrises, 3 surfaces and 7 times in total are dropped from the height of 60cm to a concrete side freely while packed.

(4) Terminal strength
Satisfy an initial value after impressing the load of 9.8N in the direction of compression for one minute.

4. Environmental performance
(1) Use surroundings temperatures -30-70℃ (However, there must be neither be dewy nor freezing)

(2) Use surroundings humidity. 25～95%RH.

(3) Preservation surroundings temperatures -40-70℃ (However, there must be neither be dewy nor freezing)

(4) Preservation surroundings humidity. 25～95%RH.

5. Business-proof Business
(1) Salt-fog test
Do not generate rust on corrosion and externals remarkable depending on the salt-fog test which builds in and provides for the meter of the gas to JIS Z 2371 after testing for 100 hours.
Insulation resistance: 5MΩ or more.
Dielectric strength: AC250V 1 minute (50/60Hz).
However, measures under the dry state after the examination ends.

(2) Wetprooting
Do not provide the obstacle as a function after leaving for continuousness 96 hour in atmosphere of 40±2℃ and 90-98%RH.
Insulation resistance 10MΩ or more.
However, measures under the dry state after the examination ends.

(3) Heat-humidity cycle
Do not provide the obstacle as a function by 10 cycles at each heat-humidity of showing in Figure 2 of regulations of the check of the meter of the gas
Insulation resistance 10MΩ or more.
Moreover, do not bleach the final cycle in the state of the low temperature.
However, measures under the dry state after the examination ends.

(4) High temperature leaving
Do not provide the obstacle as a function after leaving in the constant temperature tank of 70±2℃ for 96 hours.

(5) Heatproof impact
Do not provide the obstacle as a function after leaving for 10 cycles. (onecycle:-30℃, 30 minutes → 70℃, 30 minutes).

(6) Electrical service life
Do not provide the obstacle as a function after 10,000 operations under the rated load of 3VDC, 1mA at a frequency of 10 to 20 operations per minute.
Insulation resistance :10MΩ or more.

(7) Corroded gas
H_2S5±1ppm, 40℃ and 65%RH and leaving for 96 hours.
The contact resistance after examining is assumed to be 1kΩ or less.

Note 1. Among the judgment standards, the meaning of 'satisfy an initial value' is as follows.

① Operation characteristic operates by 90-170 cm/s² (0.3, 0.5 and 0.7 cycle seconds).
② Contact resistance Below 1Ω.
③ Insulation resistance 100MΩ or more.
④ Voltage AC250V 50/60Hz 1 minute.

Moreover, the meaning of 'Do not provide the obstacle as function' is as follows.

① Operation characteristic Operate by 80-250 cm/s²(0.3, 0.5, and 0.7 cycle seconds).
② Contact resistance Below 100Ω.
③ Insulation resistance 100MΩ or more.
④ Dielectric strength AC250V 50/60Hz 1 minute.

Note 2. Guaranteed term and range of guarantee

(1) Guaranteed term
It will be assumed one year after the commodity is delivered.

(2) Range of guarantee
Only when the breakdown is caused during the above-mentioned guaranteed term by the responsibility of our company, the breakdown part of this commodity is exchanged or is repaired.
The guarantee is a guarantee of the delivery goods units and pardon expenditure (work pay and damage amends, etc.) because of the exchange work, please.

Note 3. The terms of validty of this specifications
One year after the day of issue.
If we have not had any orders for one year, we will make this specifications invalid.

SYM	DATE	E/C CONTENTS	SIGN	SYM	DATE	E/C CONTENTS	SIGN
A 1	990421	changed to SI d'Unites	[illegible]				

Inspecting regulations for microcomputer

Figure 2

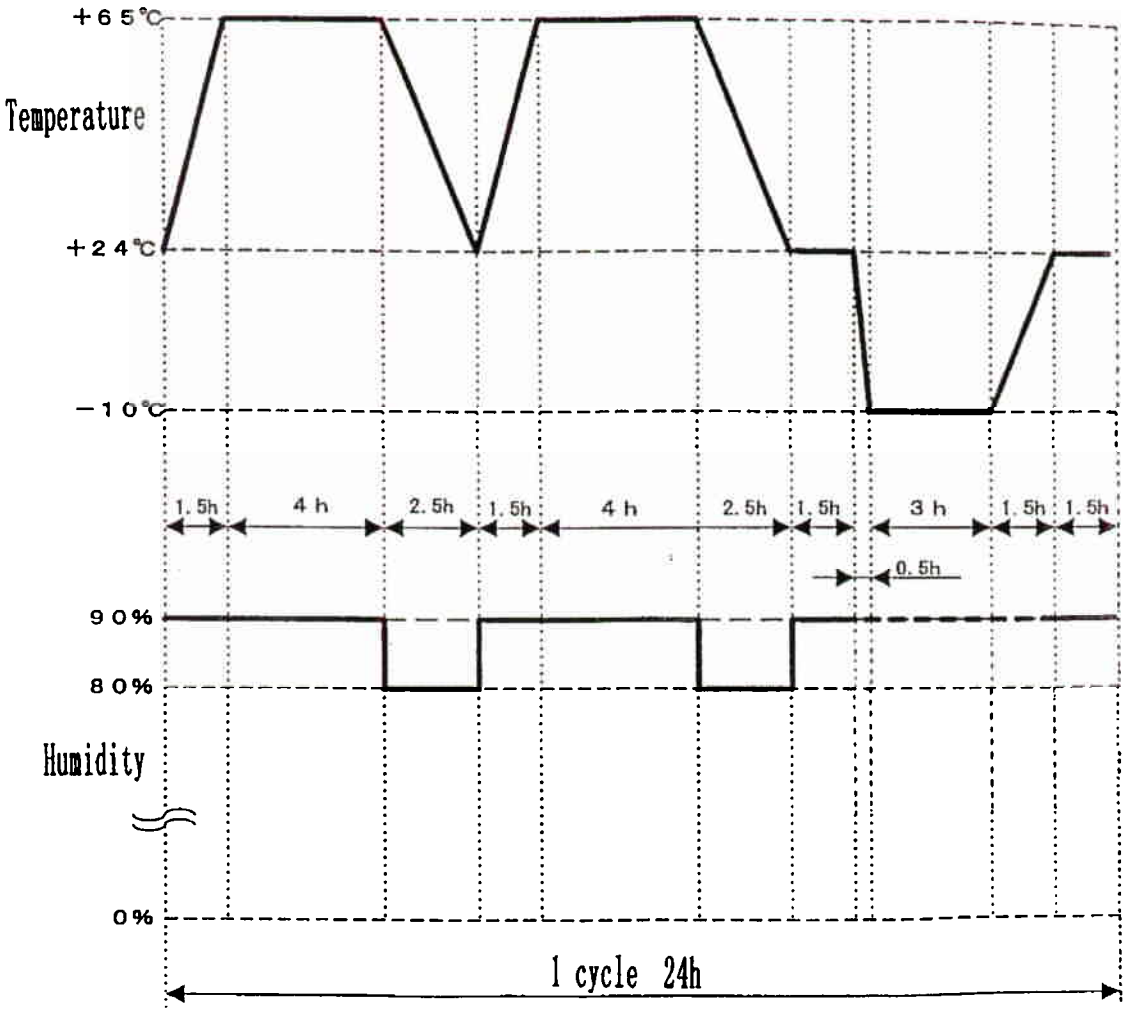

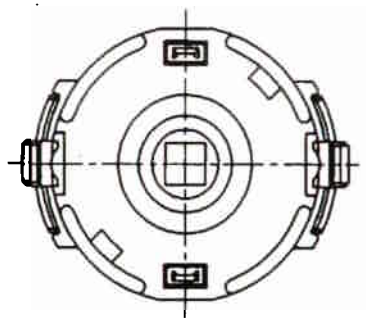

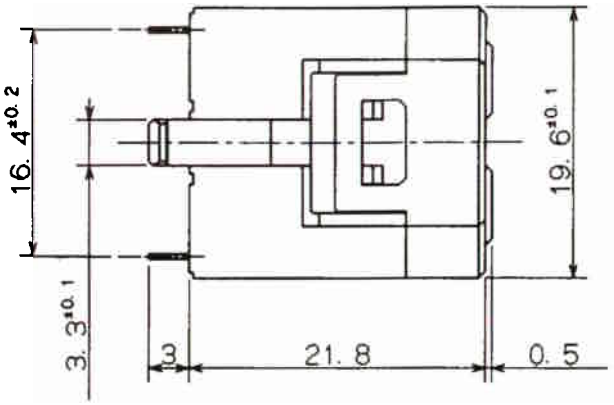

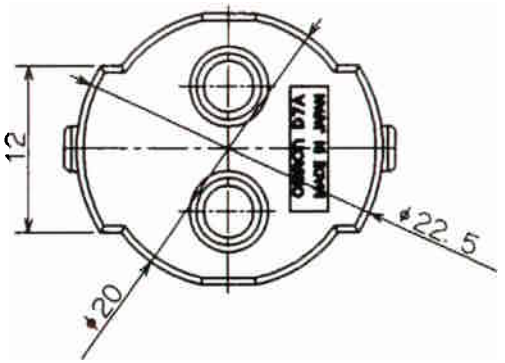

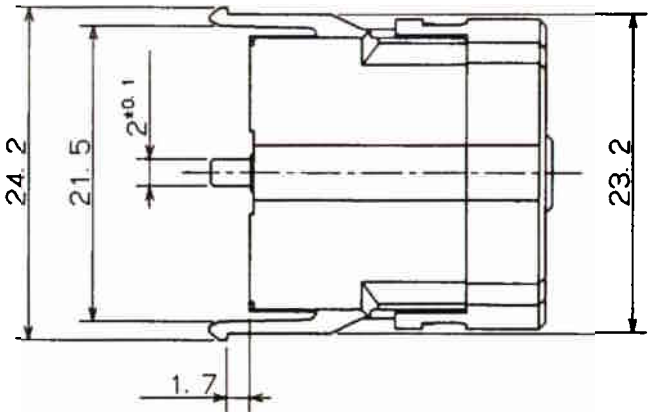

					MATERIAL				SCALE 2:1	TYPE D7A-1 OUTLINE DRAWING
					FINISH					
					TOLERANCES UNLESS SPECIFIED ±0.4	DESIGNED July 15 '98 S Eseda	CHECKED July 15 '98 S Mori	APPROVED July 15 '98 N. Ashikaga	3RD ANGLE	DRWG NO. 6421444-0 A
SYM	DATE	E/C. CONTENTS	E/C NO.	SIGN					SHEET	DESIGNED FOR

© OMRON Corporation
All Rights Reserved

OMRON

Mouser Electronics

Authorized Distributor

Click to View Pricing, Inventory, Delivery & Lifecycle Information:

Omron:

D7A-2 D7A-1