Features

* Hi.Eff.Red and Green chips are matched for uniform light output.
* Long life-solid state reliability.
* Low power consumption.
* I.C. compatible.

Package Dimensions

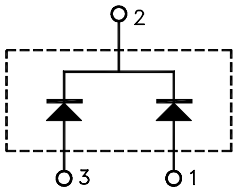

1. Hi.Eff.Red Anode
2. Common Cathode
3. Green Anode

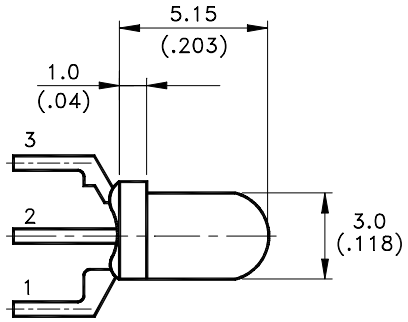

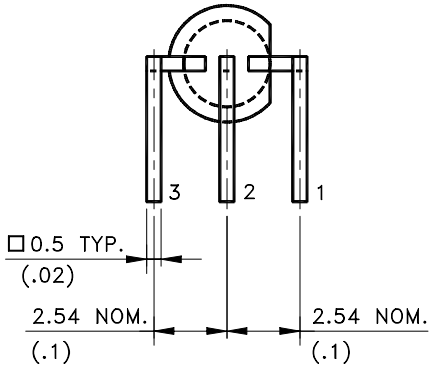

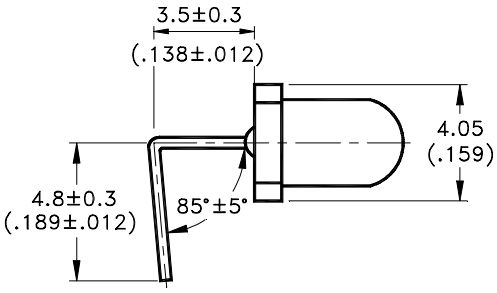

Part No.	Lens	Source Color
LTL-1BEHKVMP1	Water Clear	Hi-Eff.Red / Green

Notes:
1. All dimensions are in millimeters (inches).
2. Tolerance is ±0.25mm(.010") unless otherwise noted.
3. Protruded resin under flange is 1.0mm(.04") max.
4. Lead spacing is measured where the leads emerge from the package.
5. Specification are subject to change without notice.

Absolute Maximum Ratings at T_A=25℃

Parameter	Hi.Eff.Red	Green	Unit
Power Dissipation	100	100	mW
Peak Forward Current (1/10 Duty Cycle, 0.1ms Pulse Width)	120	120	mA
Continuous Forward Current	30	30	mA
Derating Linear From 50℃	0.4	0.4	mA/℃
Reverse Voltage	5	5	V
Operating Temperature Range	-55℃ to + 100℃		
Storage Temperature Range	-55℃ to + 100℃		
Lead Soldering Temperature [1.6mm(.063") From Body]	260℃ for 5 Seconds		

Electrical Optical Characteristics at T_A=25℃

Parameter	Symbol	Color	Min.	Typ.	Max.	Unit	Test Condition
Luminous Intensity	I_V	Hi.Eff.Red Green	5.6 8.7	19 29		Mcd	I_F = 10mA Note 1,4
Viewing Angle	$2\theta_{1/2}$	Hi.Eff.Red Green		55 55		deg	Note 2 (Fig.6)
Peak Emission Wavelength	λp	Hi.Eff.Red Green		650 565		nm	Measurement @Peak (Fig.1)
Dominant Wavelength	λd	Hi.Eff.Red Green		635 569		nm	Note 3
Spectral Line Half-Width	$\Delta\lambda$	Hi.Eff.Red Green		40 30		nm	
Forward Voltage	V_F	Hi.Eff.Red Green		2.0 2.1	2.6 2.6	V	I_F = 20mA
Reverse Current	I_R	Hi.Eff.Red Green			100 100	μA	V_R = 5V
Capacitance	C	Hi.Eff.Red Green		20 35		pF	V_F = 0 , f = 1MHz

Note: 1. Luminous intensity is measured with a light sensor and filter combination that approximates the CIE (Commission International De L'Eclairage) eye-response curve.

2. $\theta_{1/2}$ is the off-axis angle at which the luminous intensity is half the axial luminous intensity.

3. The dominant wavelength, λ_d is derived from the CIE chromaticity diagram and represents the single wavelength which defines the color of the device.

4. The stated maximum ratings refer to one chip.

Typical Electrical / Optical Characteristics Curves

(25℃ Ambient Temperature Unless Otherwise Noted)

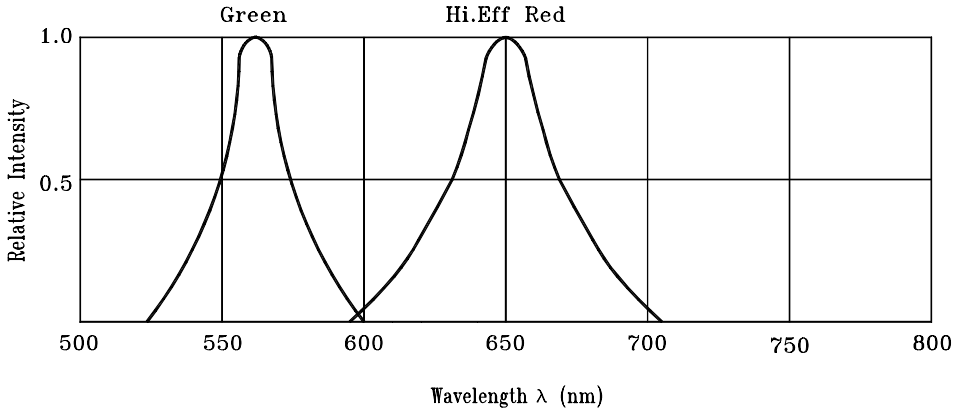

Fig.1 Relative Intensity vs. Wavelength

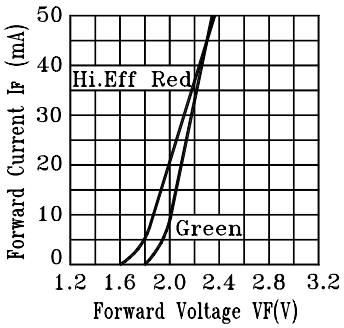

Fig.2 Forward Current vs. Forward Voltage

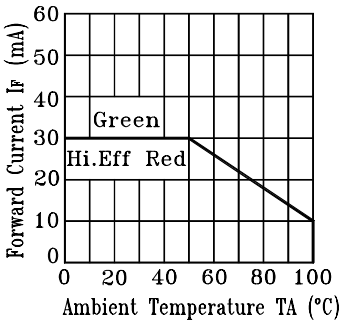

Fig.3 Forward Current Derating Curve

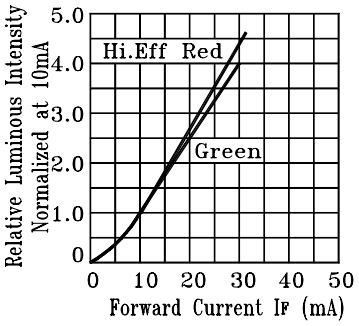

Fig.4 Relative Luminous Intensity vs. Forward Current

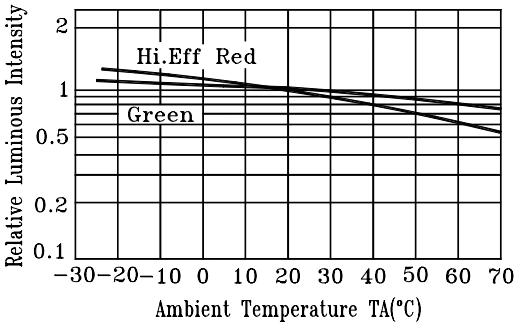

Fig.5 Luminous Intensity vs. Ambient Temperature

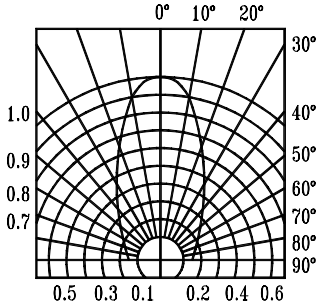

Fig.6 Spatial Distribution