Distributed by:

JAMECO® ELECTRONICS

www.Jameco.com ✦ 1-800-831-4242

The content and copyrights of the attached material are the property of its owner.

Jameco Part Number 853257

THIS DRAWING IS UNPUBLISHED. RELEASED FOR PUBLICATION -.- .
© COPYRIGHT - BY TYCO ELECTRONICS CORPORATION. ALL RIGHTS RESERVED.

LOC	DIST
GP	00

REVISIONS

P	LTR	DESCRIPTION	DATE	DWN	APVD
	O	RELEASED PER EC 0S13-0016-05	18MAR05	LV	JG

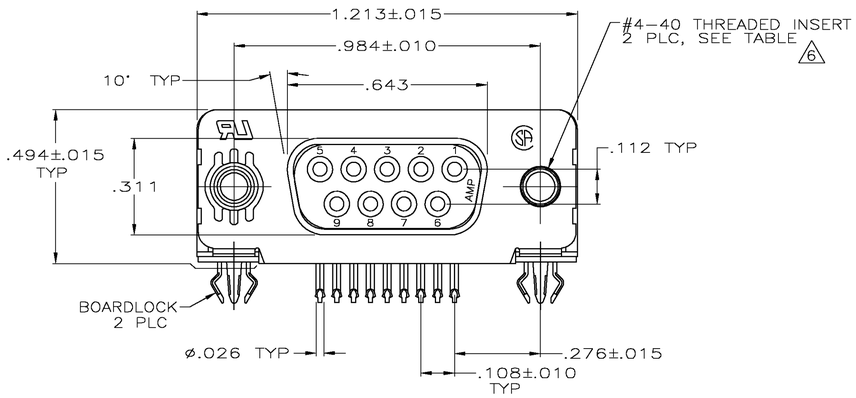

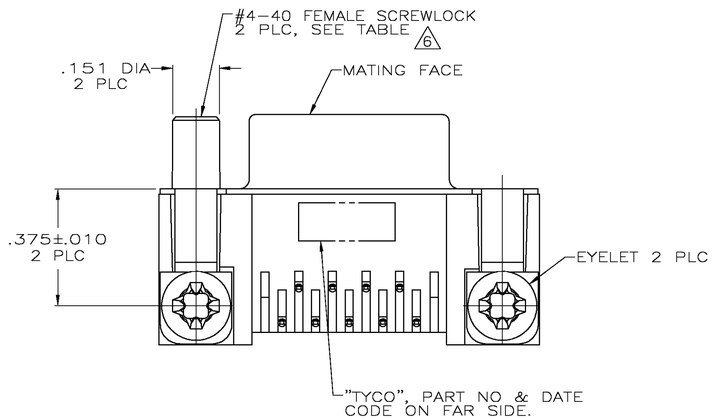

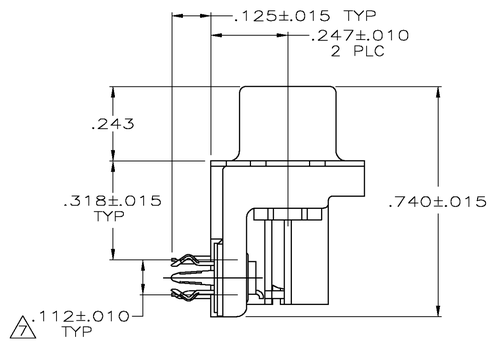

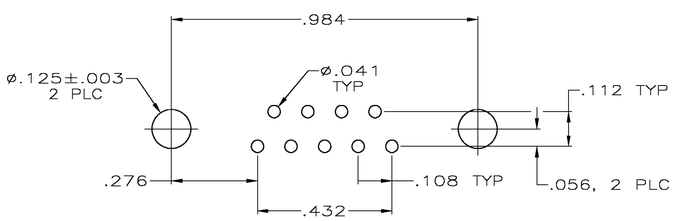

PC BOARD MOUNTING DIMENSIONS

1. CONNECTOR MATES WITH ANY 9 POSN PLUG IN AMPLIMITE SERIES.

2. MOLDED PARTS: FLAME RETARDANT 94V-0 RATED THERMOPLASTIC, BLACK.
SHELL: STEEL PER ASTM A109
CONTACTS: PHOSPHOR BRONZE PER QQ-B-750
EYELETS: BRASS
SCREWLOCKS: ZINC
INSERTS: ZINC
BOARDLOCKS: COPPER ALLOY

3. SHELL: .000100 MIN TIN
CONTACTS: SEE TABLE
EYELETS: TIN
SCREWLOCKS: CLEAR CHROMATE
BOARDLOCKS: TIN.
INSERTS: CLEAR CHROMATE

4. GOLD FLASH FOR A DISTANCE OF .100 MIN FROM MATING END,
.000100-.000200 TIN ON TERMINATION END,
ALL OVER .000050 NICKEL ON ENTIRE CONTACT.

5. .000030 GOLD FOR A DISTANCE OF .100 MIN FROM MATING END,
.000100-.000200 TIN ON TERMINATION END,
ALL OVER .000050 NICKEL ON ENTIRE CONTACT.

6. SCREWLOCKS & INSERTS WILL WITHSTAND 4 IN LBS TORQUE & 20 LBS
PULL OUT FORCE FROM MATING FACE SIDE.

7. DIMENSION APPLIES TO CENTER LINE OF CONTACTS.

PACKAGING	MOUNTING HARDWARE	CONTACT FINISH	PART NUMBER
–	FEMALE SCREWLOCKS	5	5747844-6
–	FEMALE SCREWLOCKS	4	5747844-5
TRAY	THREADED INSERTS	5	5747844-4
–	THREADED INSERTS	4	5747844-3
–	.125 DIA HOLES	5	5747844-2

THIS DRAWING IS A CONTROLLED DOCUMENT.

DIMENSIONS: Inches

TOLERANCES UNLESS OTHERWISE SPECIFIED:
0 PLC ± –
1 PLC ± –
2 PLC ± –
3 PLC ± .005
4 PLC ± –
ANGLES ± 2

MATERIAL 2

FINISH 3

DWN 18MAR05 L.VARELA – DOCK5
CHK 18MAR205 S.BOLASH
APVD 18MAR205 M.WALMSLEY
PRODUCT SPEC 108-40025
APPLICATION SPEC 114-40010
WEIGHT –

CUSTOMER DRAWING

tyco Electronics
Tyco Electronics Corporation
Harrisburg, PA 17105-3608

NAME
RECEPTACLE ASSEMBLY, SIZE 1, RIGHT ANGLE, .318 SERIES, FRONT METAL SHELL, .026 DIA POSTS, BOARDLOCKS, AMPLIMITE HD-20

SIZE	CAGE CODE	DRAWING NO	RESTRICTED TO
A1	00779	C-5747844	–

SCALE	SHEET	OF	REV
4:1	1	1	O