Model P170

17mm Rotary Potentiometer
Metal Shaft / Bushing
Conductive Plastic Element
100,000 Cycle Life
Switch Option
RoHS Compliant

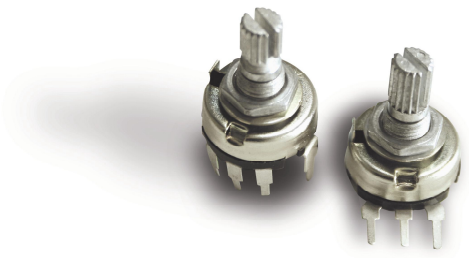

MODEL STYLES

Side Adjust, Solder Lugs	P170N
Side Adjust , Solder Lugs with Switch	P170S
Side Adjust , PCB pins	P170N2
Side Adjust , PCB pins, with Switch	P170S2
Top Adjust, PCB pins	P170NP1
Top Adjust, PCB pins, with Switch	P170SP1
Rear Adjust, PCB pins	P170NPD
Rear Adjust, PCB pins, with Switch	P170SPD

ELECTRICAL[1]

Resistance Range, Ohms	100-1M
Standard Resistance Tolerance	± 20%
Residual Resistance	10 ohms max.
Input Voltage, maximum	200 Vac max.
Power rating, Watts	0.1W- B taper, 0.05W- others
Dielectric Strength	500Vac, I minute
Insulation Resistance, Minimum	50M ohms at 500Vdc
Sliding Noise	100mV max.
Actual Electrical Travel, Nominal	240°
Switch Contact Resistance	50 mini ohms max.
Switch Power Rated	1.0A at 12Vdc

MECHANICAL

Total Mechanical Travel	260°± 10°
Static Stop Strength	40 oz-in
Rotational Torque, Maximum	2.5 oz-in
Switch Rotational Angle	30°±10°

[1] *Specifications subject to change without notice.*

BI Technologies Corporation
4200 Bonita Place, Fullerton, CA 92835 USA
Phone: 714 447 2345 Website: www.bitechnologies.com

TT electronics
BI technologies

Downloaded from Elcodis.com electronic components distributor

Model P170

ENVIRONMENTAL

Operating Temperature Range	-20°C to +70°C
Rotational Life	100,000 cycles

ORDERING INFORMATION[2]

P170 NPD - F C 20 B R100K

- Model Series
- Style
- Shaft Type
- Full CCW Shaft Position: see below
- Shaft Length "L" see below
- Tapers
  - A = Audio
  - B = Linear
  - C = Reverse Audio
- Total Resistance

Shaft Types

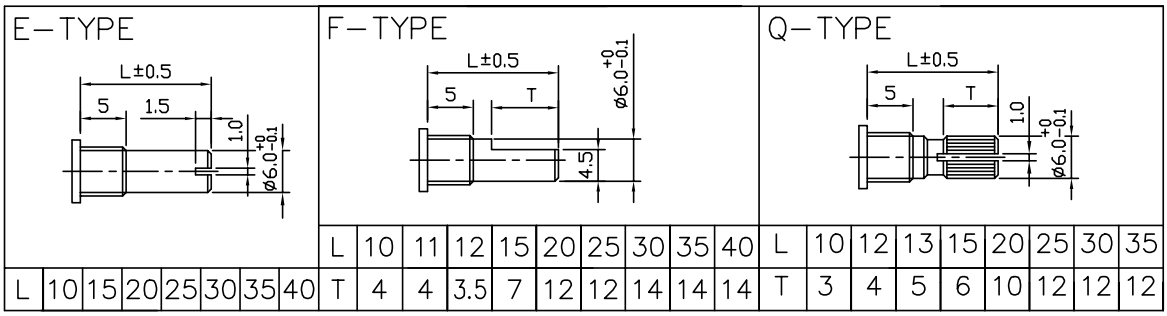

L	10	15	20	25	30	35	40

L	10	11	12	15	20	25	30	35	40
T	4	4	3.5	7	12	12	14	14	14

L	10	12	13	15	20	25	30	35
T	3	4	5	6	10	12	12	12

Shaft Position (F-Type Shaft)

Dashed lines on Type "C" and Type "A" shows position of adjustment slot for E-Type and Q-Type shafts

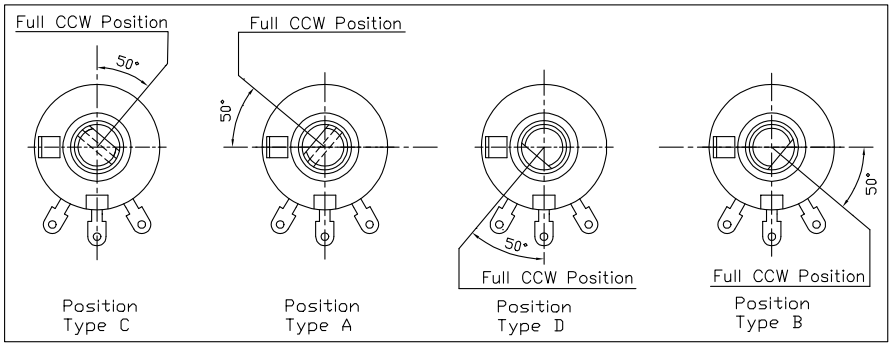

STANDARD RESISTANCE VALUES, OHMS

100	200	500	1K	2K	5K	10K	20K	50K	100K	200K	500K	1MEG

[2] *Contact our customer service for custom designs and features.*

BI Technologies Corporation
4200 Bonita Place, Fullerton, CA 92835 USA
Phone: 714 447 2345 Website: www.bitechnologies.com

Downloaded from Elcodis.com electronic components distributor

Model P170

OUTLINE DRAWING

MODEL P170N (Side Adjust, Solder Lugs)

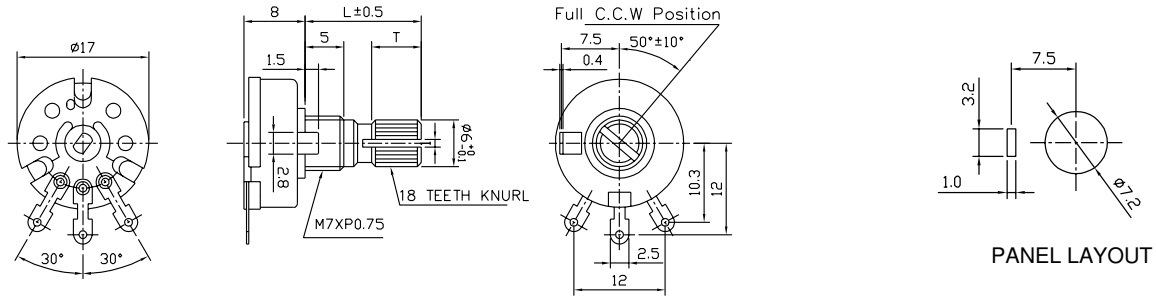

MODEL P170S (Side Adjust, Solder Lugs with Switch)

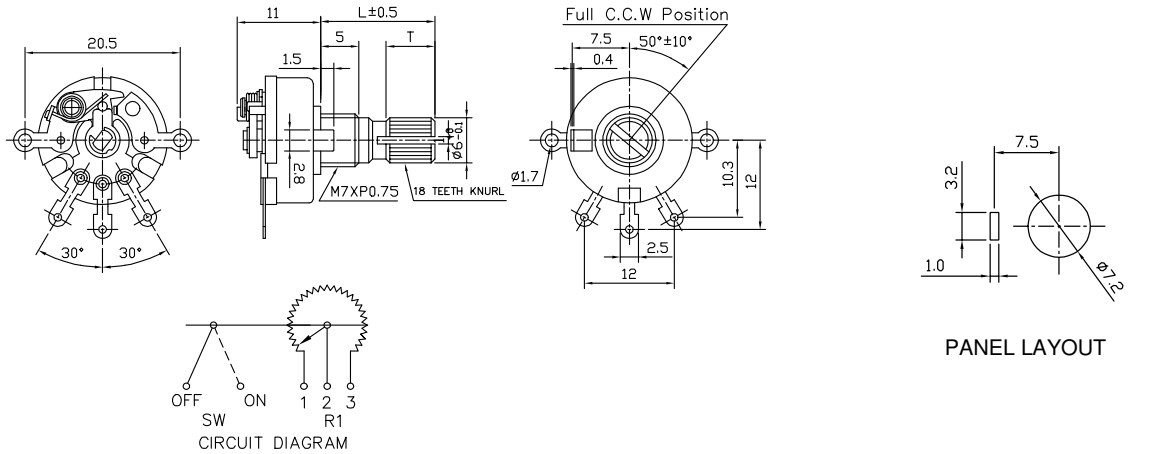

MODEL P170N2 (Side Adjust, PCB Pins)

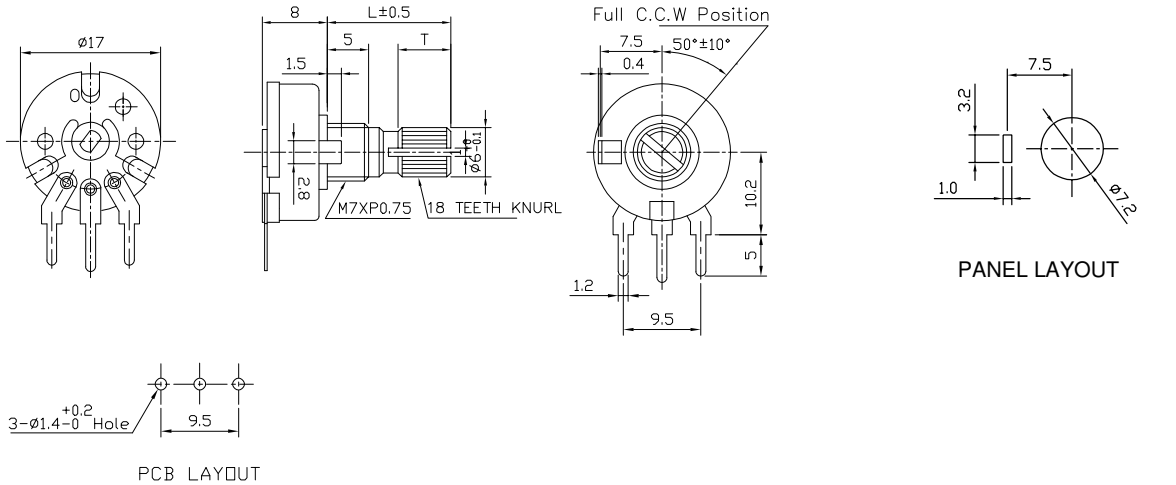

BI Technologies Corporation
4200 Bonita Place, Fullerton, CA 92835 USA
Phone: 714 447 2345 Website: www.bitechnologies.com

Downloaded from Elcodis.com electronic components distributor

Model P170

MODEL P170S2 (Side Adjust, PCB Pins with Switch)

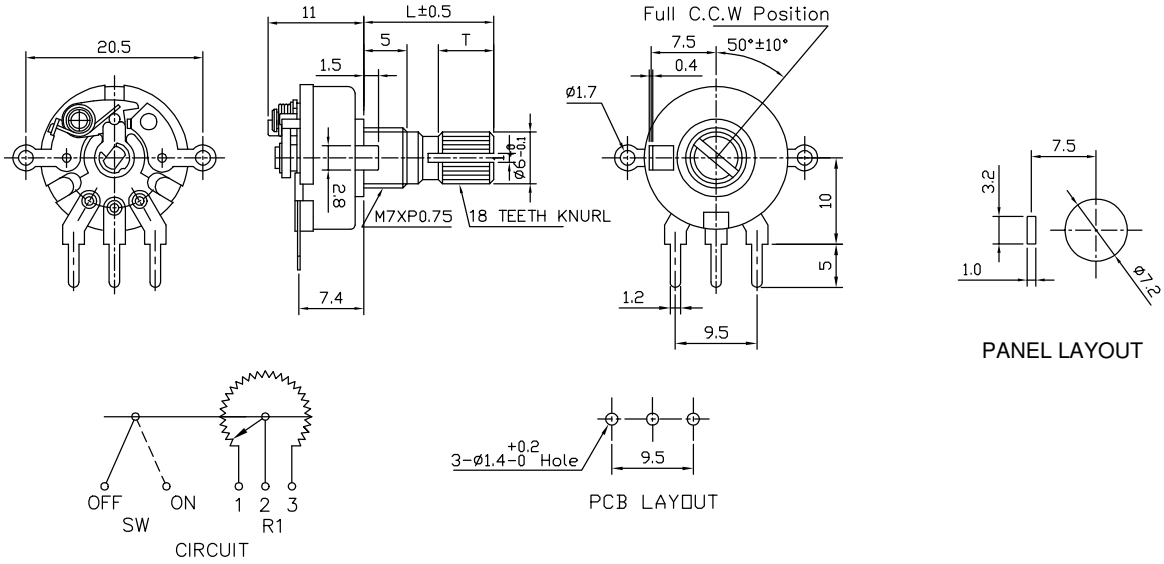

MODEL P170NP1 (Top Adjust, PCB Pins)

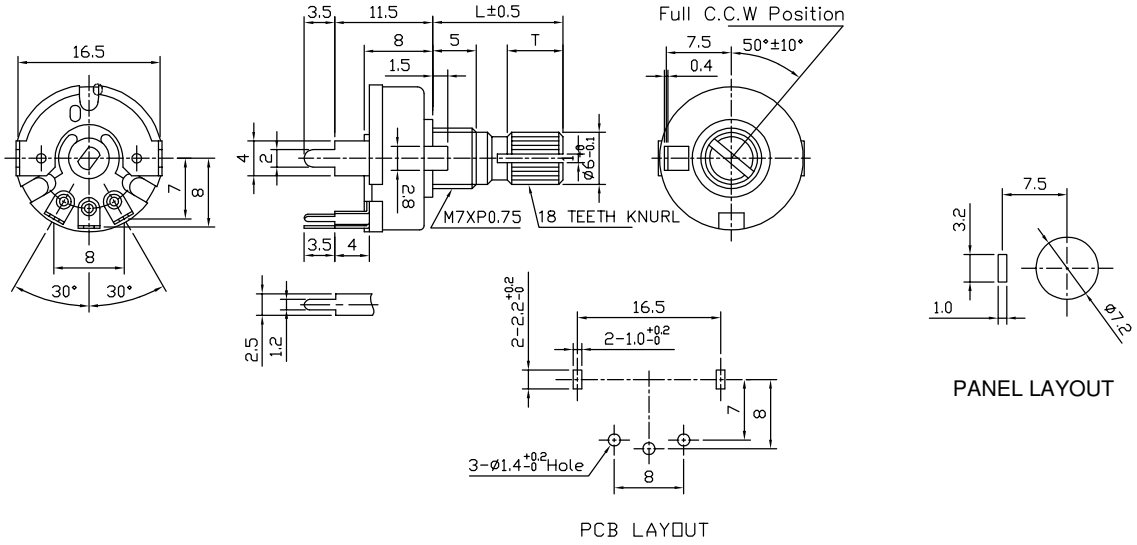

BI Technologies Corporation
4200 Bonita Place, Fullerton, CA 92835 USA
Phone: 714 447 2345 Website: www.bitechnologies.com

Downloaded from Elcodis.com electronic components distributor

Model P170

MODEL P170SP1 (Top Adjust, PCB Pins with Switch)

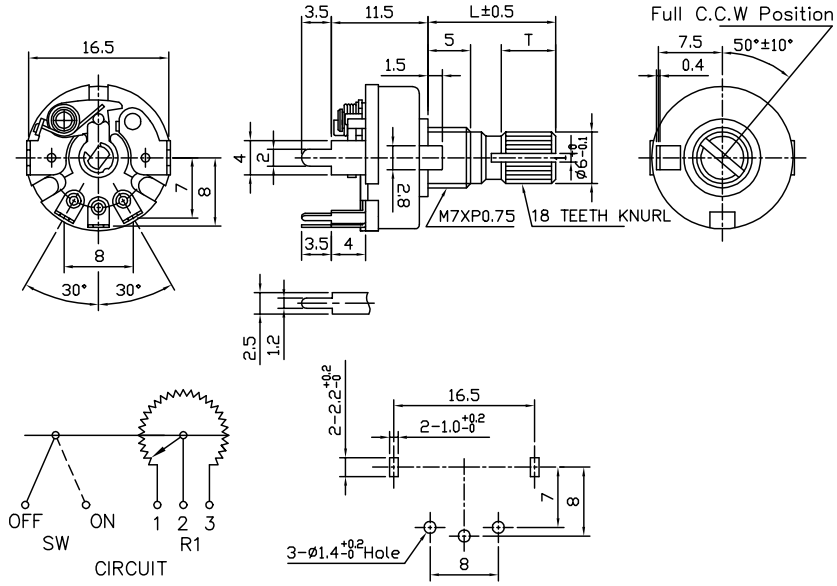

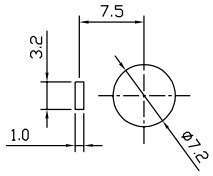

PANEL LAYOUT

MODEL P170NPD (Rear Adjust, PCB Pins)

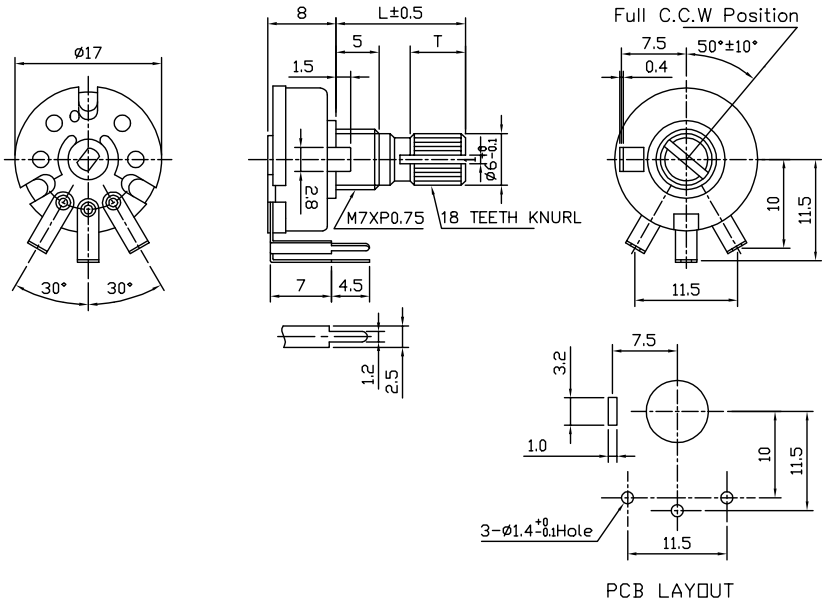

Downloaded from Elcodis.com electronic components distributor

Model P170

MODEL P170SPD (Rear Adjust, PCB Pins with Switch)

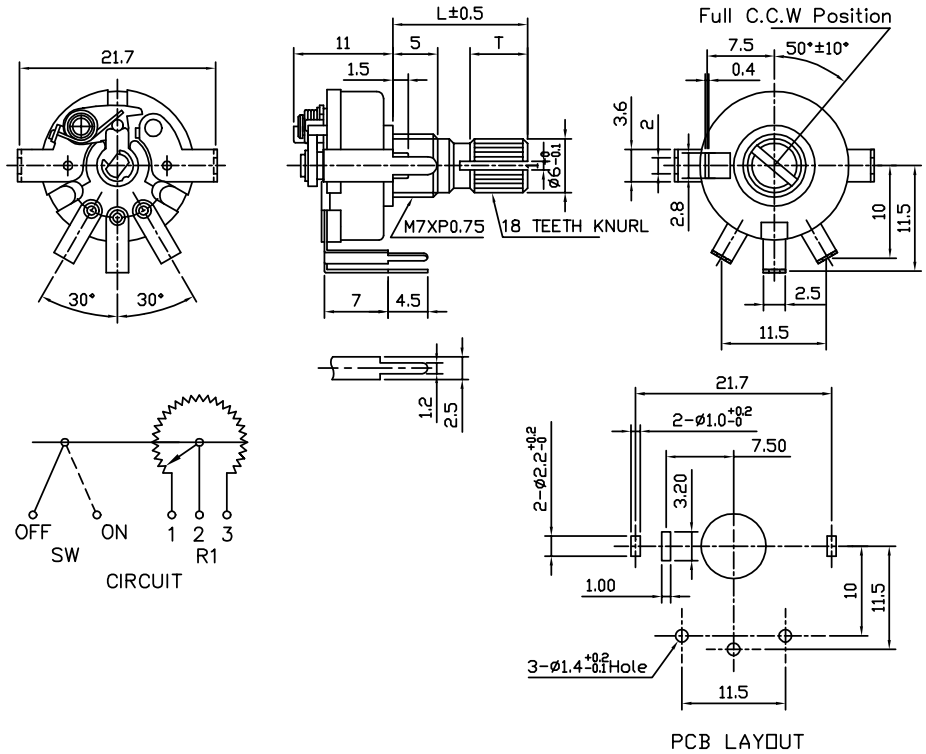

CIRCUIT DIAGRAM

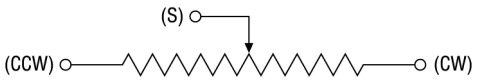

Downloaded from Elcodis.com electronic components distributor