| P/N | ø A | INTERFACE(S) | FIGURE(S) |
|---|---|---|---|
| −1CC | (.085) | DETENT | 1 |
| −2CC | (.088) | SMOOTH BORE | |
| −3CC | (.088) | CATCHERS MITT | 2 |

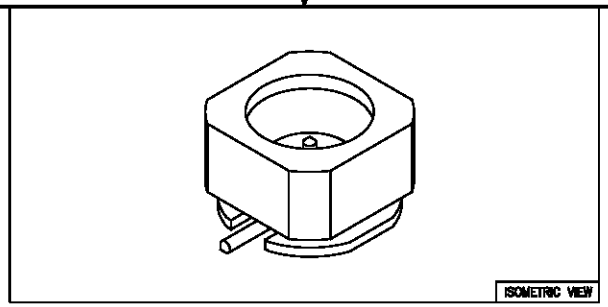


| REVISIONS | | | | |
|---|---|---|---|---|
| ZONE | REV. | DESCRIPTION(S) | DATE | BY |
| – | A | ECO 18966 | 01.23.06 | P.MAO |
| | | | | |
| | | | | |

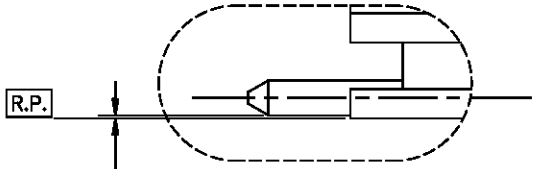


+.000/−.003 FROM TOP OF CENTER CONDUCTOR AND INSULATOR TO TOP OF BODY

DETAIL−A

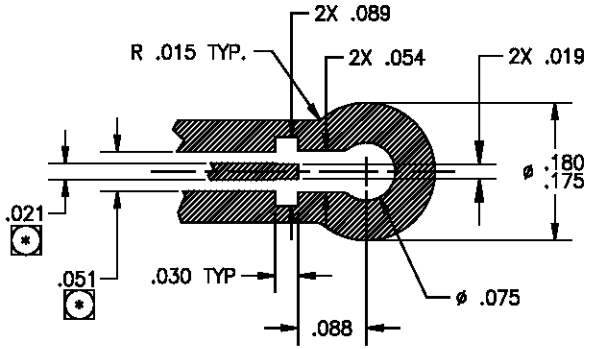


RECOMMENDED PCB FOOTPRINT

| DRAWING NO. | REV. |
|---|---|
| P312 | A |

(*) DIMENSIONS SHOWN ARE FOR ROGERS 4350 PCB MATERIAL. THESE DIMENSIONS MAY VARY DEPENDING ON PCB MATERIAL USED.

SSMP® IS A REGISTERED TRADEMARK OF CONNECTINGE DEVICES INC.
VECTRA® IS A REGISTERED TRADEMARK OF TICONA COMPANY.

**MATERIAL(S):**

Body:
BeCu alloy per ASTM B−196 or Brass alloy per ASTM B−16.
Center Conductor:
Brass alloy per ASTM B−16.
Dielectric:
Vectra® E130i (LCP).

**ELECTRICAL:**

Impedance: 50 Ohms nominal.
Freqancy Range: DC to 18.0 GHz.
VSWR: 1.10 + .005*f(GHz).
Insertion Loss: .10 X √f(GHz).
Working Voltage: 335 Vrms max @ sea level.
Dielectric Withstanding Voltage: 500 Vrms min.
R.F. HiPot Voltage: 325 Vrms min @ 5MHz.
Corona Level: 125 Vrms @ 70,000 ft.
Insulation Resistance: 5000 MegOhms min.
Contact Resistance:
Center Contact: 6.0 Milliohm max.
Outer Contact: 2.0 Milliohm max.
R.F. Leakage: −(90 − fGHz).

**MECHANICAL:**

Mating Characteristics:
Interface per Mil−Std−348.
Force To Engage & Disengage:
Engage:
Detent: 3.5 pouds max.
Smooth Bore: 1.5 pounds max.
Catchers Mitt: 1.5 pounds max.
Disengage:
Detent: 5.0 pouds min.
Smooth Bore: 1.5 pounds min.
Catchers Mitt: 1.5 pounds min.
Center Contact Retention: NA
Connector Durability:
100 cycles min.

**ENVIRONMENTAL:**

Temperature Range: −65° to +165°.
Thermal Shock:
Mil−Std−202, Method 107, Test Cond. B.
Moisture Resistance:
Mil−Std−202, Method 106, except step 7b shall be omitted. Insulation resistance at least 1000 MegOhms within 5 minutes after removal from humidity.
Corrosion:
Mil−Std−202, Method 101, Test Cond. B.
Vibration:
Mil−Std−202, Method 204, Test Cond. D.
Shock:
Mil−Std−202, Method 213, Test Cond. I.

**FINISH(ES):**

Body And Center Conductor:
Gold plated per ASTM B−488, Type II, Code C or D, Class 1.25, over nickel under plated per SAE−AMS−QQ−N−290, Class 1.

**APPLICABLE TENSOLITE DOCUMENTS**

| WORK STD | PROD INST | ASSY INST |
|---|---|---|
| NA | NA | NA |
| | | |
| | | |

**NOTICE**

THIS DRAWING DISCLOSES A CONFIDENTIAL, PROPRIETARY DESIGN DEVELOPED BY NOBLETT COMPANY AND ALL DESIGN, MANUFACTURING REPRODUCTION, USE AND SALE RIGHTS REGARDING THE SAME ARE EXPRESSLY RESERVED. IT IS SUBMITTED UNDER A CONFIDENTIAL RELATIONSHIP FOR A SPECIFIED PURPOSE AND THE RECIPIENT AGREES BY ACCEPTING THIS DRAWING NOT TO SUPPLY OR DISCLOSE ANY INFORMATION REGARDING IT TO ANY UNAUTHORIZED PERSON TO INCORPORATE IN OTHER PRODUCTS ANY SPECIAL FEATURES PECULIAR TO THIS DESIGN. ALL PATENT RIGHTS HERETO ARE EXPRESSLY RESERVED BY TENSOLITE COMPANY, LONG BEACH, CALIFORNIA 90815.

**TOLERANCES AND NOTES EXCEPT AS NOTED**

DIMENSIONS ARE IN INCHES.
LINEAR .XX ±.015 .XXX ±.005 ANGULAR ± 1/2°
FRACTION ± 1/32
1. MACHINE FINISH 63
2. BREAK ALL SHARP EDGES .005 MAX.
3. MACHINED FILLETS .005 MAX.
4. MACHINED SURFACE TOLERANCE TO REPRESENTIVE ASSY WITHIN .005 INCHES PER INCH.
5. MACHINED DIAMETERS CONCENTRIC WITHIN .005 T.I.R.
6. DIMENSIONS TO BE MET BEFORE PLATING.
7. CHAMFER ALL THREADS 45°.
8. THREADS PER H−28
9. REMOVE FRAYED EDGES ON TEFLON.
10. REMOVE ALL BURRS.

| | | | |
|---|---|---|---|
| – | – | – | – |
| MATERIAL | SIZE | SPECIFICATION | PROCUREMENT |

NEXT ASSY

| APPROVAL INITIALS | | DATE |
|---|---|---|
| DRAWN BY | P.MAO | 03.02.04 |
| CHECKED | P.MAO | 01.23.06 |
| QUALITY | | |
| ENGINEERING | P.MAO | 01.23.06 |
| | PM | 01.23.06 |

Tensolite HIGH PERFORMANCE CABLES & INTERCONNECT SYSTEMS Long Beach, California 90815

TITLE: SSMP® MALE, PCB SURFACE MOUNT TO RIGHT ANGLE TERMINATION

SCALE: 16:1 | SUB-DIRECTORY/FILENAME: OLP312 | SHEET 1 OF 2

SIZE: C | CAGE CODE: 30990 | DRAWING NO.: P312 | REV.: A

ENG−DWG REV. A

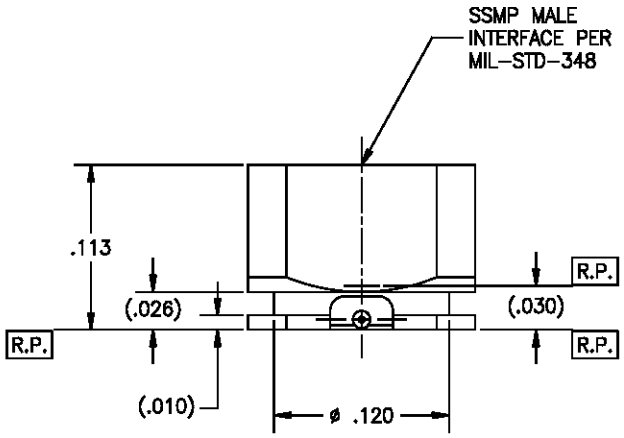


FIGURE 1

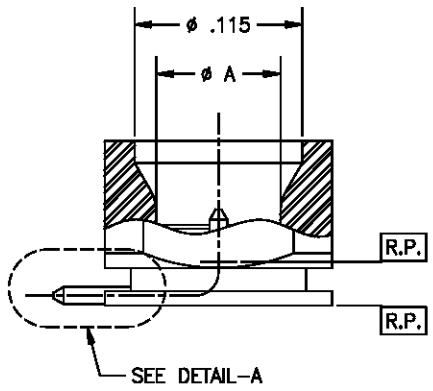


FIGURE 2

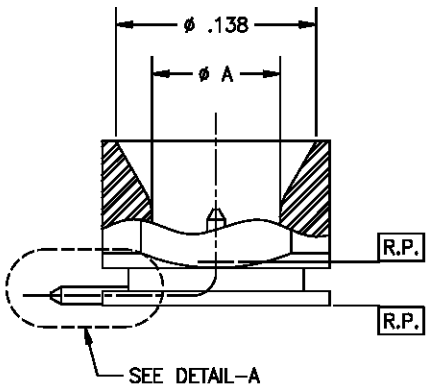


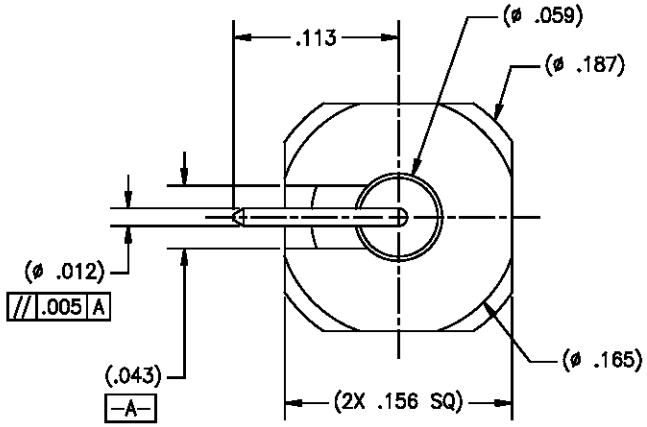


| | | | |
|---|---|---|---|
| SCALE 16:1 | SUB-DIRECTORY/FILENAME OLP312 | | SHEET 2 OF 2 |
| SIZE C | CAGE CODE 30990 | DRAWING NO. P312 | REV A |

ENG–DWG REV. A