SINGLE COLOR LED

1.6mm Round Shape

2262S / 2272S Series

S T A N D A R D C O L O R

Outline Dimensions

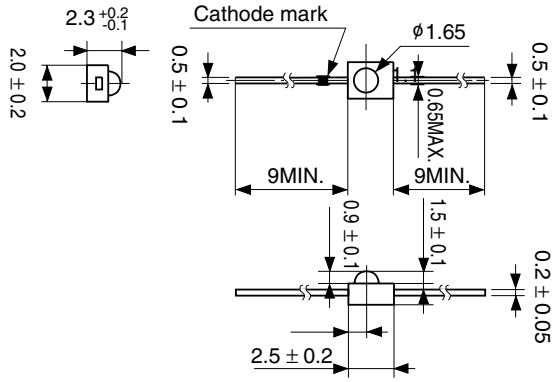

Unit: mm

Absolute Maximum Ratings

(Ta=25°C)

Item	Symbol	Red BR	Red MPR	Red MVR	Orange MAA	Yellow MAY	Yellow Green MPY	Green MPG	Pure Green MBG	Units
Power Dissipation	Pd	80	70	70	70	70	70	70	70	mW
Forward Current	I_F	40	25	25	25	25	25	25	25	mA
Peak Forward Current	I_{FM}	300	60	60	60	60	60	60	60	mA
Reverse Voltage	V_R	4	4	4	4	4	4	4	4	V
Operating Temperature	Topr	-30 to +85								°C
Storage Temperature	Tstg	-30 to +100								°C
Derating (DC)*	I_F	0.67	0.42							mA/°C

* Ta=25°C, I_{FM} applies for the pulse width 1msec. and duty cycle 1/20
The current derating for operation applies when the temperature is above 25°C

Electro-Optical Characteristics

*2262S lens is clear and 2272S lens is diffused
**The viewing angle is an average and will vary by color

(Ta=25°C)

Part No.	Material	Emitted Color	Lens Color*	Luminous Intensity I_V MIN.	Luminous Intensity I_V TYP.	Luminous Intensity I_V I_F	Wavelength Peak TYP.	Wavelength Dominant TYP.	Wavelength Spectral Line Half Width TYP.	Wavelength I_F	Forward Voltage V_F TYP.	Forward Voltage V_F MAX.	Forward Voltage V_F I_F	Reverse Current I_R MAX.	Reverse Current I_R V_R	Viewing Angle** (2 1/2)
BR2262S/2272S	GaAlAs	Red	Pastel Red	10/8	20/16	20	660	647	30	20	1.7	2.0	20	100	4	70/100°
MPR2262S/2272S	GaP			0.8/0.6	1.6/1.2	10	700	635	100	10	2.1	2.8	10	20	4	60/90°
MVR2262S/2272S	GaAsP			8/6	16/12	20	630	624	30	20	2.0	2.8	20	20	4	
MAA2262S/2272S	GaAsP	Orange	Pastel Orange	8/6	16/12	20	605	606	30	20	2.2	2.8	20	20	4	
MAY2262S/2272S	GaAsP	Yellow	Pastel Yellow	8/5	16/10	20	580	590	30	20	2.2	2.8	20	20	4	
MPY2262S/2272S	GaP	Yellow Green		12/8	24/16	20	570	572	30	20	2.1	2.8	20	20	4	
MPG2262S/2272S	GaP	Green	Pastel Green	8/6	16/12	20	560	567	30	20	2.1	2.8	20	20	4	
MBG2262S/2272S	GaP	Pure Green		4/2	8/4	20	555	558	30	20	2.1	2.8	20	20	4	
Units				mcd		mA	nm			mA	V		mA	μA	V	Deg.

Spatial Distribution (x)

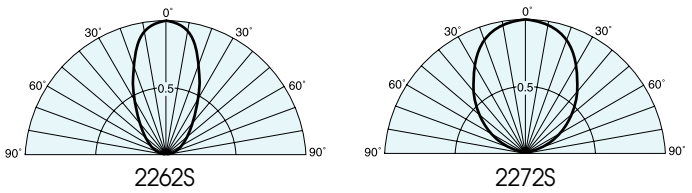

*Spatial distribution is viewed as a typical illustration and will vary by color

Operation Current Derating Chart

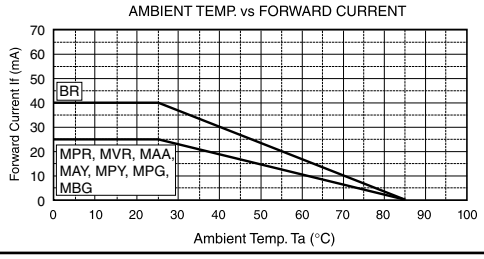

Downloaded from Elcodis.com electronic components distributor