PIC16C77X

28/40-Pin, 8-Bit CMOS Microcontrollers w/ 12-Bit A/D

Microcontroller Core Features:

- High-performance RISC CPU
- Only 35 single word instructions to learn
- All single cycle instructions except for program branches which are two cycle
- Operating speed: DC - 20 MHz clock input
  DC - 200 ns instruction cycle
- 4K x 14 words of Program Memory, 256 x 8 bytes of Data Memory (RAM)
- Interrupt capability (up to 14 internal/external interrupt sources)
- Eight level deep hardware stack
- Direct, indirect, and relative addressing modes
- Power-on Reset (POR)
- Power-up Timer (PWRT) and Oscillator Start-up Timer (OST)
- Watchdog Timer (WDT) with its own on-chip RC oscillator for reliable operation
- Programmable code-protection
- Power saving SLEEP mode
- Selectable oscillator options
- Low-power, high-speed CMOS EPROM technology
- Fully static design
- In-Circuit Serial Programming™ (ISCP)
- Wide operating voltage range: 2.5V to 5.5V
- High Sink/Source Current 25/25 mA
- Commercial and Industrial temperature ranges
- Low-power consumption:
  - < 2 mA @ 5V, 4 MHz
  - 22.5 µA typical @ 3V, 32 kHz
  - < 1 µA typical standby current

* Enhanced features

Pin Diagram

600 mil. PDIP, Windowed CERDIP

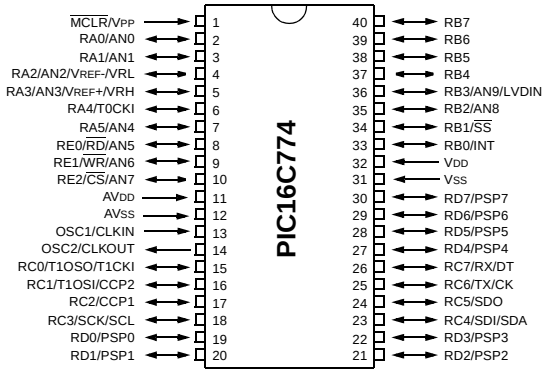

Peripheral Features:

- Timer0: 8-bit timer/counter with 8-bit prescaler
- Timer1: 16-bit timer/counter with prescaler, can be incremented during sleep via external crystal/clock
- Timer2: 8-bit timer/counter with 8-bit period register, prescaler and postscaler
- Two Capture, Compare, PWM modules
- Capture is 16-bit, max. resolution is 12.5 ns, Compare is 16-bit, max. resolution is 200 ns, PWM max. resolution is 10-bit
- * 12-bit multi-channel Analog-to-Digital converter
- * On-chip absolute bandgap voltage reference generator
- * Synchronous Serial Port (SSP) with SPI™ (Master Mode) and I^2C™
- * Universal Synchronous Asynchronous Receiver Transmitter, supports high/low speeds and 9-bit address mode (USART/SCI)
- Parallel Slave Port (PSP) 8-bits wide, with external RD, WR and CS controls
- * Programmable Brown-out detection circuitry for Brown-out Reset (BOR)
- * Programmable Low-voltage detection circuitry

This is an advanced copy of the data sheet and therefore the contents and specifications are subject to change based on device characterization.

Pin Diagrams

300 mil. SDIP, SOIC, Windowed CERDIP, SSOP

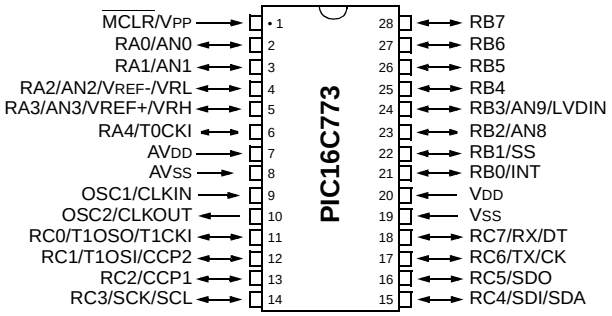

PLCC

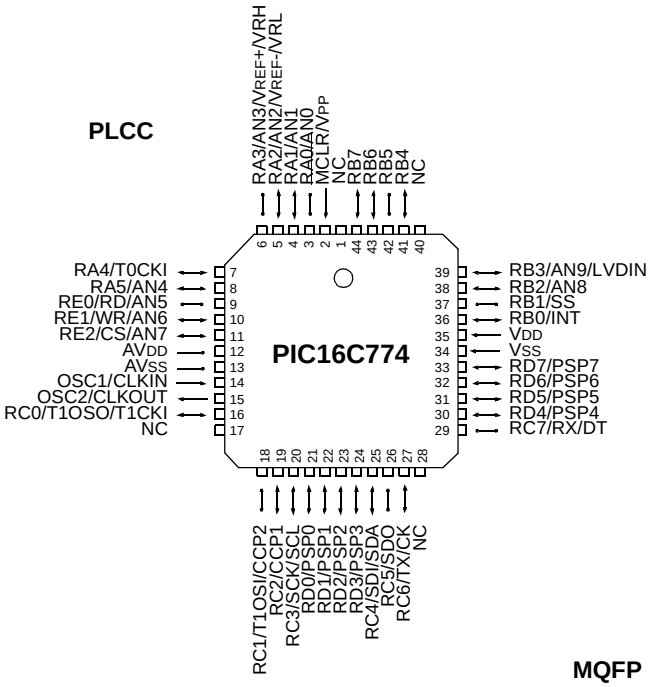

MQFP
TQFP

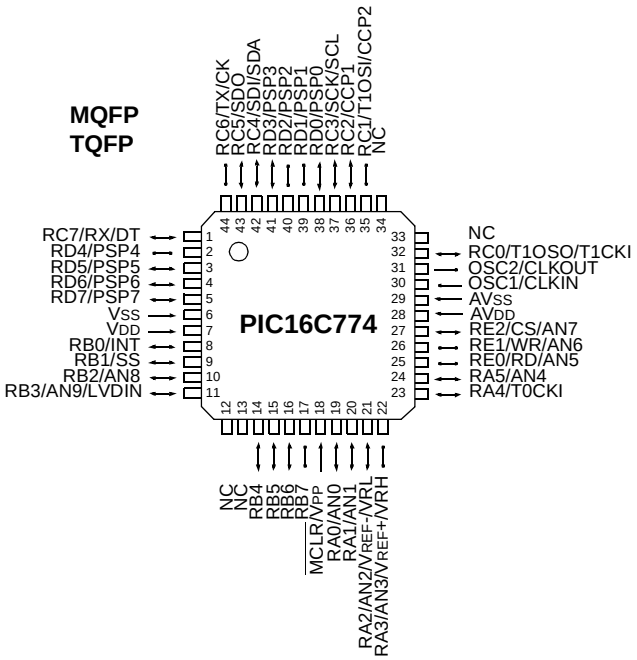

 © 1999 Microchip Technology Inc.

Key Features PICmicro™ Mid-Range Reference Manual (DS33023)	PIC16C773	PIC16C774
Operating Frequency	DC - 20 MHz	DC - 20 MHz
Resets (and Delays)	POR, BOR, MCLR, WDT (PWRT, OST)	POR, BOR, MCLR, WDT (PWRT, OST)
Program Memory (14-bit words)	4K	4K
Data Memory (bytes)	256	256
Interrupts	13	14
I/O Ports	Ports A,B,C	Ports A,B,C,D,E
Timers	3	3
Capture/Compare/PWM modules	2	2
Serial Communications	MSSP, USART	MSSP, USART
Parallel Communications	—	PSP
12-bit Analog-to-Digital Module	6 input channels	10 input channels
Instruction Set	35 Instructions	35 Instructions

Table of Contents

1.0 Device Overview 5
2.0 Memory Organization 11
3.0 I/O Ports 27
4.0 Timer0 Module 39
5.0 Timer1 Module 41
6.0 Timer2 Module 45
7.0 Capture/Compare/PWM (CCP) Module(s) 47
8.0 Master Synchronous Serial Port (MSSP) Module 53
9.0 Addressable Universal Synchronous Asynchronous Receiver Transmitter (USART) 97
10.0 Voltage Reference Module and Low-voltage Detect 113
11.0 Analog-to-Digital Converter (A/D) Module 117
12.0 Special Features of the CPU 127
13.0 Instruction Set Summary 143
14.0 Development Support 145
15.0 Electrical Characteristics 151
16.0 DC and AC Characteristics Graphs and Tables 173
17.0 Packaging Information 175
Appendix A: Revision History 187
Appendix B: Device Differences 187
Appendix C: Conversion Considerations 187
Index 189
Bit/Register Cross-Reference List 196
On-Line Support 197
Reader Response 198
PIC16C77X Product Identification System 199

To Our Valued Customers

Most Current Data Sheet

To obtain the most up-to-date version of this data sheet, please check our Worldwide Web site at:

http://www.microchip.com

You can determine the version of a data sheet by examining its literature number found on the bottom outside corner of any page. The last character of the literature number is the version number. e.g., DS30000A is version A of document DS30000.

Errata

An errata sheet may exist for current devices, describing minor operational differences (from the data sheet) and recommended workarounds. As device/documentation issues become known to us, we will publish an errata sheet. The errata will specify the revision of silicon and revision of document to which it applies.

To determine if an errata sheet exists for a particular device, please check with one of the following:

- Microchip's Worldwide Web site; http://www.microchip.com
- Your local Microchip sales office (see last page)
- The Microchip Corporate Literature Center; U.S. FAX: (602) 786-7277

When contacting a sales office or the literature center, please specify which device, revision of silicon and data sheet (include literature number) you are using.

Corrections to this Data Sheet

We constantly strive to improve the quality of all our products and documentation. We have spent a great deal of time to ensure that this document is correct. However, we realize that we may have missed a few things. If you find any information that is missing or appears in error, please:

- Fill out and mail in the reader response form in the back of this data sheet.
- E-mail us at webmaster@microchip.com.

We appreciate your assistance in making this a better document.

 © 1999 Microchip Technology Inc.

1.0 DEVICE OVERVIEW

This document contains device-specific information. Additional information may be found in the PICmicro™ Mid-Range Reference Manual, (DS33023), which may be obtained from your local Microchip Sales Representative or downloaded from the Microchip website. The Reference Manual should be considered a complementary document to this data sheet, and is highly recommended reading for a better understanding of the device architecture and operation of the peripheral modules.

There a two devices (PIC16C773 and PIC16C774) covered by this datasheet. The PIC16C773 devices come in 28-pin packages and the PIC16C774 devices come in 40-pin packages. The 28-pin devices do not have a Parallel Slave Port implemented.

The following two figures are device block diagrams sorted by pin number; 28-pin for Figure 1-1 and 40-pin for Figure 1-2. The 28-pin and 40-pin pinouts are listed in Table 1-1 and Table 1-2, respectively.

FIGURE 1-1: PIC16C773 BLOCK DIAGRAM

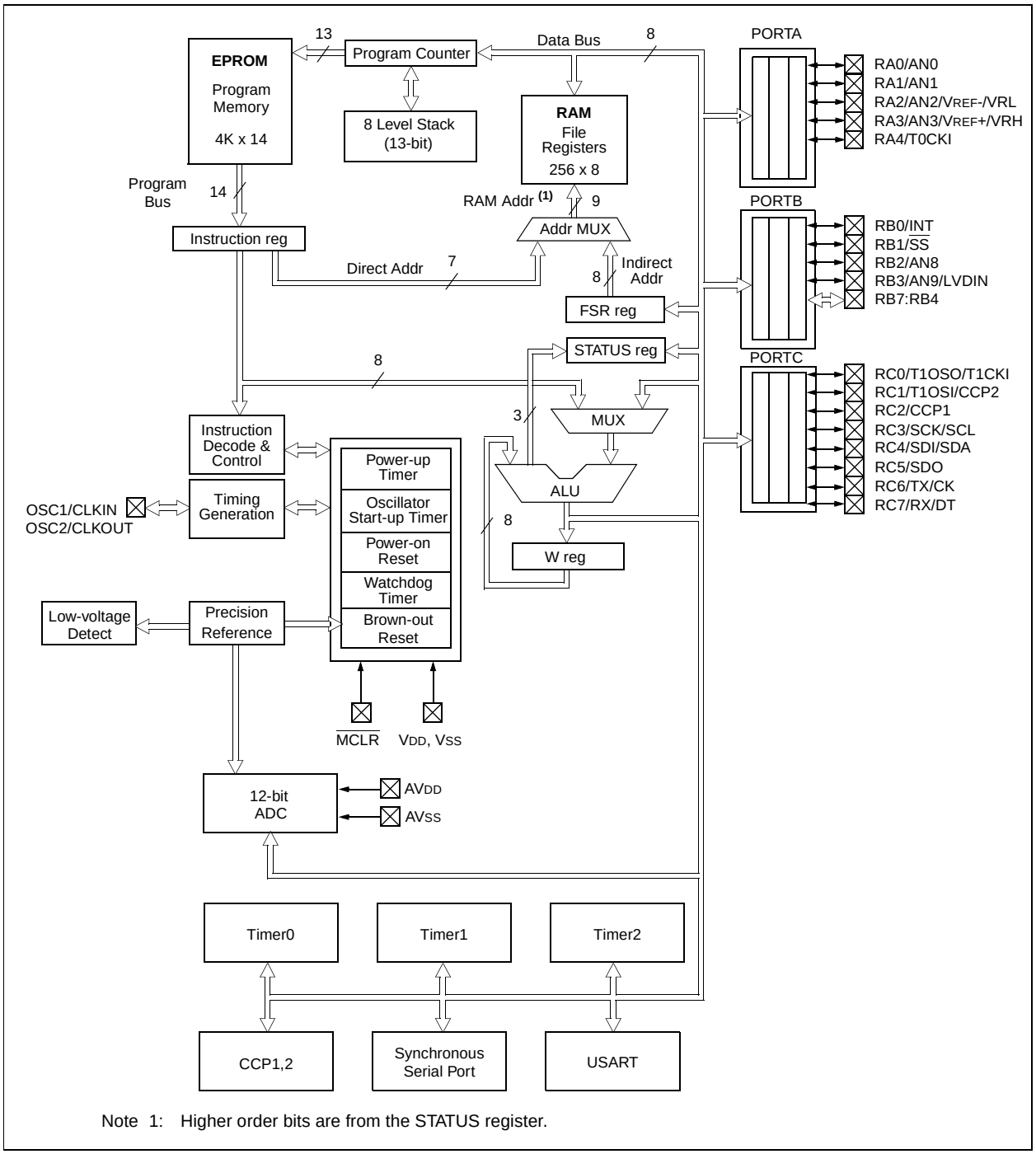

Note 1: Higher order bits are from the STATUS register.

FIGURE 1-2: PIC16C774 BLOCK DIAGRAM

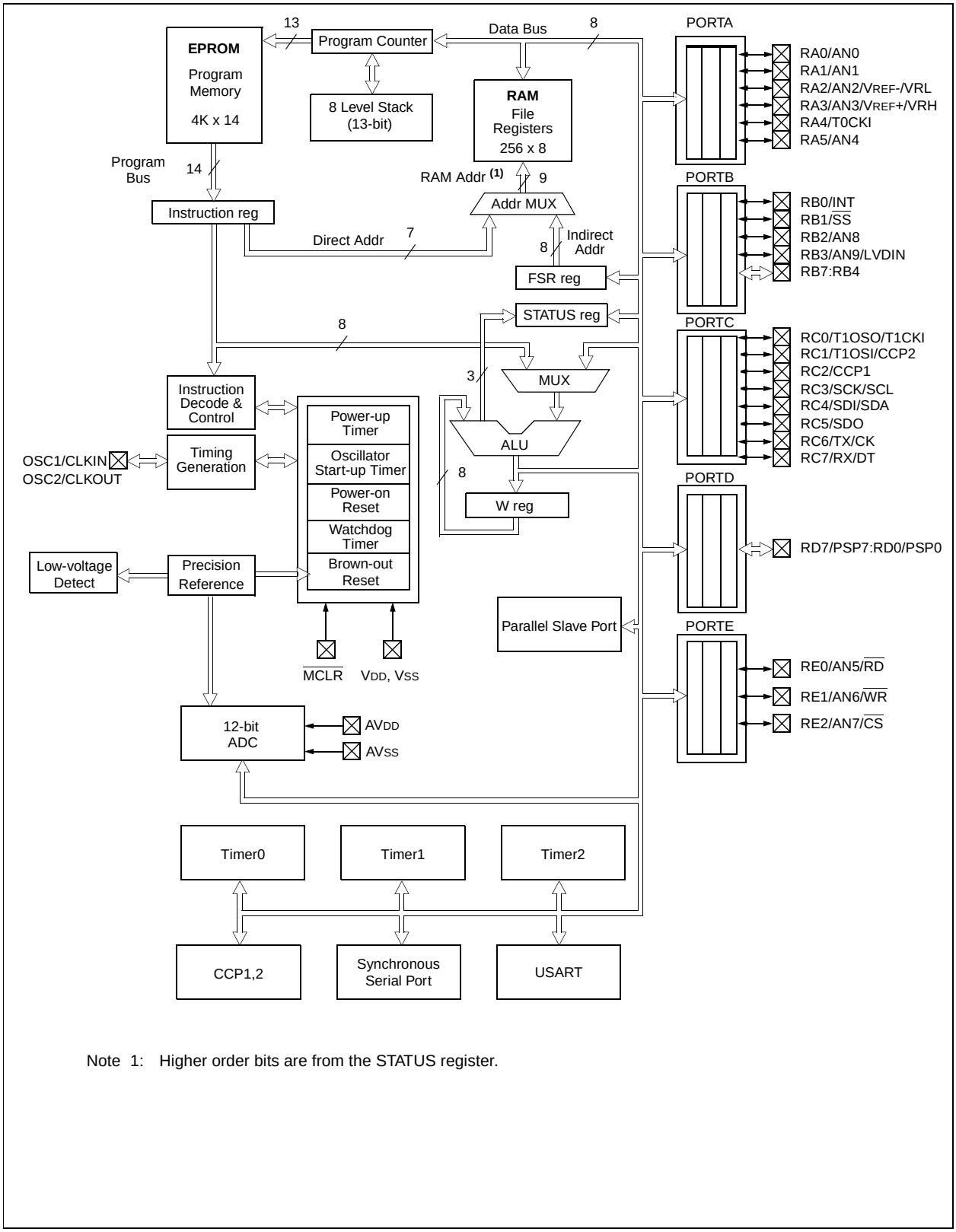

Note 1: Higher order bits are from the STATUS register.

 © 1999 Microchip Technology Inc.

TABLE 1-1 PIC16C773 PINOUT DESCRIPTION

Pin Name	DIP, SSOP, SOIC Pin#	I/O/P Type	Buffer Type	Description
OSC1/CLKIN	9	I	ST/CMOS(3)	Oscillator crystal input/external clock source input.
OSC2/CLKOUT	10	O	—	Oscillator crystal output. Connects to crystal or resonator in crystal oscillator mode. In RC mode, the OSC2 pin outputs CLKOUT which has 1/4 the frequency of OSC1, and denotes the instruction cycle rate.
$\overline{MCLR}$/VPP	1	I/P	ST	Master clear (reset) input or programming voltage input. This pin is an active low reset to the device.
				PORTA is a bi-directional I/O port.
RA0/AN0	2	I/O	TTL	RA0 can also be analog input0
RA1/AN1	3	I/O	TTL	RA1 can also be analog input1
RA2/AN2/VREF-/VRL	4	I/O	TTL	RA2 can also be analog input2 or negative analog reference voltage input or internal voltage reference low
RA3/AN3/VREF+/VRH	5	I/O	TTL	RA3 can also be analog input3 or positive analog reference voltage input or internal voltage reference high
RA4/T0CKI	6	I/O	ST	RA4 can also be the clock input to the Timer0 module. Output is open drain type.
				PORTB is a bi-directional I/O port. PORTB can be software programmed for internal weak pull-up on all inputs.
RB0/INT	21	I/O	TTL/ST(1)	RB0 can also be the external interrupt pin.
RB1/$\overline{SS}$	22	I/O	TTL/ST(1)	RB1 can also be the SSP slave select
RB2/AN8	23	I/O	TTL	RB2 can also be analog input8
RB3/AN9/LVDIN	24	I/O	TTL	RB3 can also be analog input9 or the low voltage detect input reference
RB4	25	I/O	TTL	Interrupt on change pin.
RB5	26	I/O	TTL	Interrupt on change pin.
RB6	27	I/O	TTL/ST(2)	Interrupt on change pin. Serial programming clock.
RB7	28	I/O	TTL/ST(2)	Interrupt on change pin. Serial programming data.
				PORTC is a bi-directional I/O port.
RC0/T1OSO/T1CKI	11	I/O	ST	RC0 can also be the Timer1 oscillator output or Timer1 clock input.
RC1/T1OSI/CCP2	12	I/O	ST	RC1 can also be the Timer1 oscillator input or Capture2 input/Compare2 output/PWM2 output.
RC2/CCP1	13	I/O	ST	RC2 can also be the Capture1 input/Compare1 output/PWM1 output.
RC3/SCK/SCL	14	I/O	ST	RC3 can also be the synchronous serial clock input/output for both SPI and I^2C modes.
RC4/SDI/SDA	15	I/O	ST	RC4 can also be the SPI Data In (SPI mode) or data I/O (I^2C mode).
RC5/SDO	16	I/O	ST	RC5 can also be the SPI Data Out (SPI mode).
RC6/TX/CK	17	I/O	ST	RC6 can also be the USART Asynchronous Transmit or Synchronous Clock.
RC7/RX/DT	18	I/O	ST	RC7 can also be the USART Asynchronous Receive or Synchronous Data.
AVSS	8	P		Ground reference for A/D converter
AVDD	7	P		Positive supply for A/D converter
VSS	19	P	—	Ground reference for logic and I/O pins.
VDD	20	P	—	Positive supply for logic and I/O pins.

Legend: I = input O = output I/O = input/output P = power
— = Not used TTL = TTL input ST = Schmitt Trigger input

Note 1: This buffer is a Schmitt Trigger input when configured for the multiplexed function.
2: This buffer is a Schmitt Trigger input when used in serial programming mode.
3: This buffer is a Schmitt Trigger input when configured in RC oscillator mode and a CMOS input otherwise.

TABLE 1-2 PIC16C774 PINOUT DESCRIPTION

Pin Name	DIP Pin#	PLCC Pin#	QFP Pin#	I/O/P Type	Buffer Type	Description
OSC1/CLKIN	13	14	30	I	ST/CMOS(4)	Oscillator crystal input/external clock source input.
OSC2/CLKOUT	14	15	31	O	—	Oscillator crystal output. Connects to crystal or resonator in crystal oscillator mode. In RC mode, OSC2 pin outputs CLKOUT which has 1/4 the frequency of OSC1, and denotes the instruction cycle rate.
$\overline{\text{MCLR}}$/VPP	1	2	18	I/P	ST	Master clear (reset) input or programming voltage input. This pin is an active low reset to the device.
						PORTA is a bi-directional I/O port.
RA0/AN0	2	3	19	I/O	TTL	RA0 can also be analog input0
RA1/AN1	3	4	20	I/O	TTL	RA1 can also be analog input1
RA2/AN2/VREF-/VRL	4	5	21	I/O	TTL	RA2 can also be analog input2 or negative analog reference voltage input or internal voltage reference low
RA3/AN3/VREF+/VRH	5	6	22	I/O	TTL	RA3 can also be analog input3 or positive analog reference voltage input or internal voltage reference high
RA4/T0CKI	6	7	23	I/O	ST	RA4 can also be the clock input to the Timer0 timer/counter. Output is open drain type.
RA5/AN4	7	8	24	I/O	TTL	RA5 can also be analog input4
						PORTB is a bi-directional I/O port. PORTB can be software programmed for internal weak pull-up on all inputs.
RB0/INT	33	36	8	I/O	TTL/ST(1)	RB0 can also be the external interrupt pin.
RB1/$\overline{\text{SS}}$	34	37	9	I/O	TTL/ST(1)	RB1 can also be the SSP slave select
RB2/AN8	35	38	10	I/O	TTL	RB2 can also be analog input8
RB3/AN9/LVDIN	36	39	11	I/O	TTL	RB3 can also be analog input9 or input reference for low voltage detect
RB4	37	41	14	I/O	TTL	Interrupt on change pin.
RB5	38	42	15	I/O	TTL	Interrupt on change pin.
RB6	39	43	16	I/O	TTL/ST(2)	Interrupt on change pin. Serial programming clock.
RB7	40	44	17	I/O	TTL/ST(2)	Interrupt on change pin. Serial programming data.

Legend: I = input O = output I/O = input/output P = power
— = Not used TTL = TTL input ST = Schmitt Trigger input

Note 1: This buffer is a Schmitt Trigger input when configured for the multiplexed function.
2: This buffer is a Schmitt Trigger input when used in serial programming mode.
3: This buffer is a Schmitt Trigger input when configured as general purpose I/O and a TTL input when used in the Parallel Slave Port mode (for interfacing to a microprocessor bus).
4: This buffer is a Schmitt Trigger input when configured in RC oscillator mode and a CMOS input otherwise.

 © 1999 Microchip Technology Inc.

TABLE 1-2 PIC16C774 PINOUT DESCRIPTION (Cont.'d)

Pin Name	DIP Pin#	PLCC Pin#	QFP Pin#	I/O/P Type	Buffer Type	Description
						PORTC is a bi-directional I/O port.
RC0/T1OSO/T1CKI	15	16	32	I/O	ST	RC0 can also be the Timer1 oscillator output or a Timer1 clock input.
RC1/T1OSI/CCP2	16	18	35	I/O	ST	RC1 can also be the Timer1 oscillator input or Capture2 input/Compare2 output/PWM2 output.
RC2/CCP1	17	19	36	I/O	ST	RC2 can also be the Capture1 input/Compare1 output/PWM1 output.
RC3/SCK/SCL	18	20	37	I/O	ST	RC3 can also be the synchronous serial clock input/output for both SPI and I^2C modes.
RC4/SDI/SDA	23	25	42	I/O	ST	RC4 can also be the SPI Data In (SPI mode) or data I/O (I^2C mode).
RC5/SDO	24	26	43	I/O	ST	RC5 can also be the SPI Data Out (SPI mode).
RC6/TX/CK	25	27	44	I/O	ST	RC6 can also be the USART Asynchronous Transmit or Synchronous Clock.
RC7/RX/DT	26	29	1	I/O	ST	RC7 can also be the USART Asynchronous Receive or Synchronous Data.
						PORTD is a bi-directional I/O port or parallel slave port when interfacing to a microprocessor bus.
RD0/PSP0	19	21	38	I/O	ST/TTL(3)	
RD1/PSP1	20	22	39	I/O	ST/TTL(3)	
RD2/PSP2	21	23	40	I/O	ST/TTL(3)	
RD3/PSP3	22	24	41	I/O	ST/TTL(3)	
RD4/PSP4	27	30	2	I/O	ST/TTL(3)	
RD5/PSP5	28	31	3	I/O	ST/TTL(3)	
RD6/PSP6	29	32	4	I/O	ST/TTL(3)	
RD7/PSP7	30	33	5	I/O	ST/TTL(3)	
						PORTE is a bi-directional I/O port.
RE0/$\overline{RD}$/AN5	8	9	25	I/O	ST/TTL(3)	RE0 can also be read control for the parallel slave port, or analog input5.
RE1/$\overline{WR}$/AN6	9	10	26	I/O	ST/TTL(3)	RE1 can also be write control for the parallel slave port, or analog input6.
RE2/$\overline{CS}$/AN7	10	11	27	I/O	ST/TTL(3)	RE2 can also be select control for the parallel slave port, or analog input7.
AVSS	12	13	29	P		Ground reference for A/D converter
AVDD	11	12	28	P		Positive supply for A/D converter
VSS	31	34	6	P	—	Ground reference for logic and I/O pins.
VDD	32	35	7	P	—	Positive supply for logic and I/O pins.
NC	—	1,17,28, 40	12,13, 33,34		—	These pins are not internally connected. These pins should be left unconnected.

Legend: I = input O = output I/O = input/output P = power
— = Not used TTL = TTL input ST = Schmitt Trigger input

Note 1: This buffer is a Schmitt Trigger input when configured for the multiplexed function.
2: This buffer is a Schmitt Trigger input when used in serial programming mode.
3: This buffer is a Schmitt Trigger input when configured as general purpose I/O and a TTL input when used in the Parallel Slave Port mode (for interfacing to a microprocessor bus).
4: This buffer is a Schmitt Trigger input when configured in RC oscillator mode and a CMOS input otherwise.

NOTES:

 © 1999 Microchip Technology Inc.

2.0 MEMORY ORGANIZATION

There are two memory blocks in each of these PICmicro® microcontrollers. Each block (Program Memory and Data Memory) has its own bus so that concurrent access can occur.

Additional information on device memory may be found in the PICmicro™ Mid-Range Reference Manual, (DS33023).

2.1 Program Memory Organization

The PIC16C77X PICmicros have a 13-bit program counter capable of addressing an 8K x 14 program memory space. Each device has 4K x 14 words of program memory. Accessing a location above the physically implemented address will cause a wraparound.

The reset vector is at 0000h and the interrupt vector is at 0004h.

FIGURE 2-1: PROGRAM MEMORY MAP AND STACK

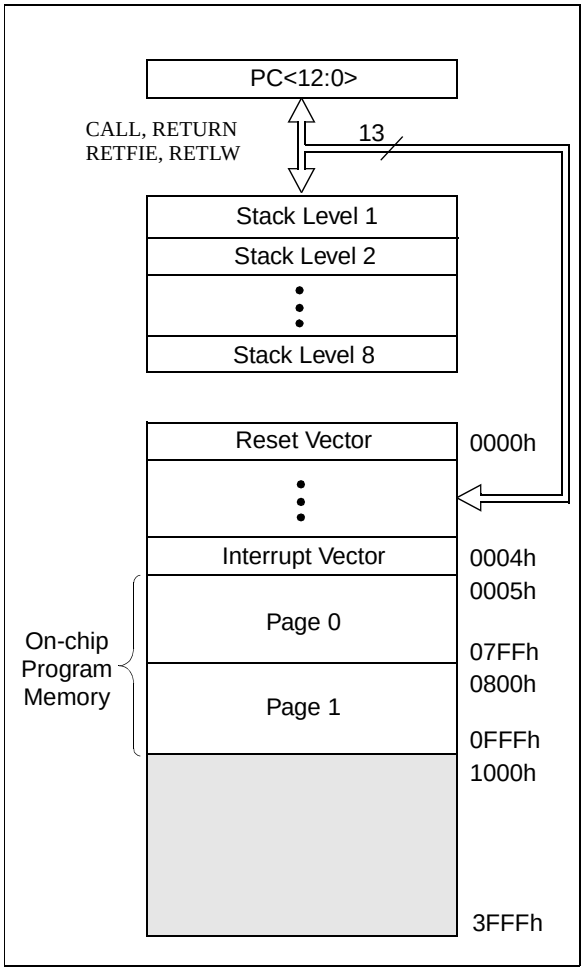

2.2 Data Memory Organization

The data memory is partitioned into multiple banks which contain the General Purpose Registers and the Special Function Registers. Bits RP1 and RP0 are the bank select bits.

RP1	RP0

(STATUS<6:5>)

= 00 → Bank0
= 01 → Bank1
= 10 → Bank2
= 11 → Bank3

Each bank extends up to 7Fh (128 bytes). The lower locations of each bank are reserved for the Special Function Registers. Above the Special Function Registers are General Purpose Registers, implemented as static RAM. All implemented banks contain special function registers. Some “high use” special function registers from one bank may be mirrored in another bank for code reduction and quicker access.

2.2.1 GENERAL PURPOSE REGISTER FILE

The register file can be accessed either directly, or indirectly through the File Select Register FSR.

FIGURE 2-2: REGISTER FILE MAP

Bank 0	File Address	Bank 1	File Address	Bank 2	File Address	Bank 3	File Address
Indirect addr.(*)	00h	Indirect addr.(*)	80h	Indirect addr.(*)	100h	Indirect addr.(*)	180h
TMR0	01h	OPTION_REG	81h	TMR0	101h	OPTION_REG	181h
PCL	02h	PCL	82h	PCL	102h	PCL	182h
STATUS	03h	STATUS	83h	STATUS	103h	STATUS	183h
FSR	04h	FSR	84h	FSR	104h	FSR	184h
PORTA	05h	TRISA	85h		105h		185h
PORTB	06h	TRISB	86h	PORTB	106h	TRISB	186h
PORTC	07h	TRISC	87h		107h		187h
PORTD (1)	08h	TRISD (1)	88h		108h		188h
PORTE (1)	09h	TRISE (1)	89h		109h		189h
PCLATH	0Ah	PCLATH	8Ah	PCLATH	10Ah	PCLATH	18Ah
INTCON	0Bh	INTCON	8Bh	INTCON	10Bh	INTCON	18Bh
PIR1	0Ch	PIE1	8Ch		10Ch		18Ch
PIR2	0Dh	PIE2	8Dh		10Dh		18Dh
TMR1L	0Eh	PCON	8Eh		10Eh		18Eh
TMR1H	0Fh		8Fh		10Fh		18Fh
T1CON	10h		90h		110h		190h
TMR2	11h	SSPCON2	91h		111h		191h
T2CON	12h	PR2	92h		112h		192h
SSPBUF	13h	SSPADD	93h		113h		193h
SSPCON	14h	SSPSTAT	94h		114h		194h
CCPR1L	15h		95h		115h		195h
CCPR1H	16h		96h		116h		196h
CCP1CON	17h		97h		117h		197h
RCSTA	18h	TXSTA	98h		118h		198h
TXREG	19h	SPBRG	99h		119h		199h
RCREG	1Ah		9Ah		11Ah		19Ah
CCPR2L	1Bh	REFCON	9Bh		11Bh		19Bh
CCPR2H	1Ch	LVDCON	9Ch		11Ch		19Ch
CCP2CON	1Dh		9Dh		11Dh		19Dh
ADRESH	1Eh	ADRESL	9Eh		11Eh		19Eh
ADCON0	1Fh	ADCON1	9Fh		11Fh		19Fh
	20h		A0h		120h		1A0h
General Purpose Register 96 Bytes		General Purpose Register 80 Bytes		General Purpose Register 80 Bytes			
			EFh		6Fh		1EFh
		accesses 70h-7Fh	F0h	accesses 70h - 7Fh	70h	accesses 70h - 7Fh	1F0h
	7Fh		FFh		17Fh		1FFh

(1) Not implemented on PIC16C773.

Unimplemented data memory locations, read as '0'.
* Not a physical register.

 © 1999 Microchip Technology Inc.

2.2.2 SPECIAL FUNCTION REGISTERS

The Special Function Registers are registers used by the CPU and Peripheral Modules for controlling the desired operation of the device. These registers are implemented as static RAM. A list of these registers is given in Table 2-1.

The special function registers can be classified into two sets; core (CPU) and peripheral. Those registers associated with the core functions are described in detail in this section. Those related to the operation of the peripheral features are described in detail in that peripheral feature section.

TABLE 2-1 PIC16C77X SPECIAL FUNCTION REGISTER SUMMARY

Address	Name	Bit 7	Bit 6	Bit 5	Bit 4	Bit 3	Bit 2	Bit 1	Bit 0	Value on: POR, BOR	Value on all other resets (2)
Bank 0											
00h(4)	INDF	Addressing this location uses contents of FSR to address data memory (not a physical register)								0000 0000	0000 0000
01h	TMR0	Timer0 module's register								xxxx xxxx	uuuu uuuu
02h(4)	PCL	Program Counter's (PC) Least Significant Byte								0000 0000	0000 0000
03h(4)	STATUS	IRP	RP1	RP0	$\overline{TO}$	$\overline{PD}$	Z	DC	C	0001 1xxx	000q quuu
04h(4)	FSR	Indirect data memory address pointer								xxxx xxxx	uuuu uuuu
05h	PORTA	—	—	PORTA5(5)	PORTA Data Latch when written: PORTA<4:0> pins when read					--0x 0000	--0u 0000
06h	PORTB	PORTB Data Latch when written: PORTB pins when read								xxxx 11xx	uuuu 11uu
07h	PORTC	PORTC Data Latch when written: PORTC pins when read								xxxx xxxx	uuuu uuuu
08h(5)	PORTD	PORTD Data Latch when written: PORTD pins when read								xxxx xxxx	uuuu uuuu
09h(5)	PORTE	—	—	—	—	—	RE2	RE1	RE0	---- -000	---- -000
0Ah(1,4)	PCLATH	—	—	—	Write Buffer for the upper 5 bits of the Program Counter					---0 0000	---0 0000
0Bh(4)	INTCON	GIE	PEIE	T0IE	INTE	RBIE	T0IF	INTF	RBIF	0000 000x	0000 000u
0Ch	PIR1	PSPIF(3)	ADIF	RCIF	TXIF	SSPIF	CCP1IF	TMR2IF	TMR1IF	0000 0000	0000 0000
0Dh	PIR2	LVDIF	—	—	–	BCLIF	—	—	CCP2IF	0--- 0--0	0--- 0--0
0Eh	TMR1L	Holding register for the Least Significant Byte of the 16-bit TMR1 register								xxxx xxxx	uuuu uuuu
0Fh	TMR1H	Holding register for the Most Significant Byte of the 16-bit TMR1 register								xxxx xxxx	uuuu uuuu
10h	T1CON	—	—	T1CKPS1	T1CKPS0	T1OSCEN	$\overline{T1SYNC}$	TMR1CS	TMR1ON	--00 0000	--uu uuuu
11h	TMR2	Timer2 module's register								0000 0000	0000 0000
12h	T2CON	—	TOUTPS3	TOUTPS2	TOUTPS1	TOUTPS0	TMR2ON	T2CKPS1	T2CKPS0	-000 0000	-000 0000
13h	SSPBUF	Synchronous Serial Port Receive Buffer/Transmit Register								xxxx xxxx	uuuu uuuu
14h	SSPCON	WCOL	SSPOV	SSPEN	CKP	SSPM3	SSPM2	SSPM1	SSPM0	0000 0000	0000 0000
15h	CCPR1L	Capture/Compare/PWM Register1 (LSB)								xxxx xxxx	uuuu uuuu
16h	CCPR1H	Capture/Compare/PWM Register1 (MSB)								xxxx xxxx	uuuu uuuu
17h	CCP1CON	—	—	CCP1X	CCP1Y	CCP1M3	CCP1M2	CCP1M1	CCP1M0	--00 0000	--00 0000
18h	RCSTA	SPEN	RX9	SREN	CREN	ADDEN	FERR	OERR	RX9D	0000 000x	0000 000x
19h	TXREG	USART Transmit Data Register								0000 0000	0000 0000
1Ah	RCREG	USART Receive Data Register								0000 0000	0000 0000
1Bh	CCPR2L	Capture/Compare/PWM Register2 (LSB)								xxxx xxxx	uuuu uuuu
1Ch	CCPR2H	Capture/Compare/PWM Register2 (MSB)								xxxx xxxx	uuuu uuuu
1Dh	CCP2CON	—	—	CCP2X	CCP2Y	CCP2M3	CCP2M2	CCP2M1	CCP2M0	--00 0000	--00 0000
1Eh	ADRESH	A/D High Byte Result Register								xxxx xxxx	uuuu uuuu
1Fh	ADCON0	ADCS1	ADCS0	CHS2	CHS1	CHS0	GO/$\overline{DONE}$	CHS3	ADON	0000 0000	0000 0000

Legend: x = unknown, u = unchanged, q = value depends on condition, - = unimplemented read as '0'.
Shaded locations are unimplemented, read as '0'.

Note 1: The upper byte of the program counter is not directly accessible. PCLATH is a holding register for the PC<12:8> whose contents are transferred to the upper byte of the program counter.
2: Other (non power-up) resets include external reset through $\overline{MCLR}$ and Watchdog Timer Reset.
3: Bits PSPIE and PSPIF are reserved on the 28-pin devices, always maintain these bits clear.
4: These registers can be addressed from any bank.
5: These registers/bits are not implemented on the 28-pin devices read as '0'.

TABLE 2-1 PIC16C77X SPECIAL FUNCTION REGISTER SUMMARY (Cont.'d)

Address	Name	Bit 7	Bit 6	Bit 5	Bit 4	Bit 3	Bit 2	Bit 1	Bit 0	Value on: POR, BOR	Value on all other resets (2)
Bank 1											
80h(4)	INDF	Addressing this location uses contents of FSR to address data memory (not a physical register)								0000 0000	0000 0000
81h	OPTION_REG	$\overline{\text{RBPU}}$	INTEDG	T0CS	T0SE	PSA	PS2	PS1	PS0	1111 1111	1111 1111
82h(4)	PCL	Program Counter's (PC) Least Significant Byte								0000 0000	0000 0000
83h(4)	STATUS	IRP	RP1	RP0	$\overline{\text{TO}}$	$\overline{\text{PD}}$	Z	DC	C	0001 1xxx	000q quuu
84h(4)	FSR	Indirect data memory address pointer								xxxx xxxx	uuuu uuuu
85h	TRISA	—	—	bit5(5)	PORTA Data Direction Register					--11 1111	--11 1111
86h	TRISB	PORTB Data Direction Register								1111 1111	1111 1111
87h	TRISC	PORTC Data Direction Register								1111 1111	1111 1111
88h(5)	TRISD	PORTD Data Direction Register								1111 1111	1111 1111
89h(5)	TRISE	IBF	OBF	IBOV	PSPMODE	—	PORTE Data Direction Bits			0000 -111	0000 -111
8Ah(1,4)	PCLATH	—	—	—	Write Buffer for the upper 5 bits of the Program Counter					---0 0000	---0 0000
8Bh(4)	INTCON	GIE	PEIE	T0IE	INTE	RBIE	T0IF	INTF	RBIF	0000 000x	0000 000u
8Ch	PIE1	PSPIE(3)	ADIE	RCIE	TXIE	SSPIE	CCP1IE	TMR2IE	TMR1IE	0000 0000	0000 0000
8Dh	PIE2	LVDIE	—	—	—	BCLIE	—	—	CCP2IE	0--- 0--0	0--- 0--0
8Eh	PCON	—	—	—	—	—	—	$\overline{\text{POR}}$	$\overline{\text{BOR}}$	---- --qq	---- --uu
8Fh	—	Unimplemented								—	—
90h	—	Unimplemented								—	—
91h	SSPCON2	GCEN	AKSTAT	AKDT	AKEN	RCEN	PEN	RSEN	SEN	0000 0000	0000 0000
92h	PR2	Timer2 Period Register								1111 1111	1111 1111
93h	SSPADD	Synchronous Serial Port (I^2C mode) Address Register								0000 0000	0000 0000
94h	SSPSTAT	SMP	CKE	D/$\overline{\text{A}}$	P	S	R/$\overline{\text{W}}$	UA	BF	0000 0000	0000 0000
95h	—	Unimplemented								—	—
96h	—	Unimplemented								—	—
97h	—	Unimplemented								—	—
98h	TXSTA	CSRC	TX9	TXEN	SYNC	—	BRGH	TRMT	TX9D	0000 -010	0000 -010
99h	SPBRG	Baud Rate Generator Register								0000 0000	0000 0000
9Ah	—	Unimplemented								—	—
9Bh	REFCON	VRHEN	VRLEN	VRHOEN	VRLOEN	—	—	—	—	0000 ----	0000 ----
9Ch	LVDCON	—	—	BGST	LVDEN	LV3	LV2	LV1	LV0	--00 0101	--00 0101
9Ah	—	Unimplemented								—	—
9Eh	ADRESL	A/D Low Byte Result Register								xxxx xxxx	uuuu uuuu
9Fh	ADCON1	ADFM	VCFG2	VCFG1	VCFG0	PCFG3	PCFG2	PCFG1	PCFG0	0000 0000	0000 0000

Legend: x = unknown, u = unchanged, q = value depends on condition, - = unimplemented read as '0'.
Shaded locations are unimplemented, read as '0'.

Note 1: The upper byte of the program counter is not directly accessible. PCLATH is a holding register for the PC<12:8> whose contents are transferred to the upper byte of the program counter.
2: Other (non power-up) resets include external reset through $\overline{\text{MCLR}}$ and Watchdog Timer Reset.
3: Bits PSPIE and PSPIF are reserved on the 28-pin devices, always maintain these bits clear.
4: These registers can be addressed from any bank.
5: These registers/bits are not implemented on the 28-pin devices read as '0'.

 © 1999 Microchip Technology Inc.

TABLE 2-1 PIC16C77X SPECIAL FUNCTION REGISTER SUMMARY (Cont.'d)

Address	Name	Bit 7	Bit 6	Bit 5	Bit 4	Bit 3	Bit 2	Bit 1	Bit 0	Value on: POR, BOR	Value on all other resets (2)
Bank 2											
100h(4)	INDF	Addressing this location uses contents of FSR to address data memory (not a physical register)								0000 0000	0000 0000
101h	TMR0	Timer0 module's register								xxxx xxxx	uuuu uuuu
102h(4)	PCL	Program Counter's (PC) Least Significant Byte								0000 0000	0000 0000
103h(4)	STATUS	IRP	RP1	RP0	$\overline{TO}$	$\overline{PD}$	Z	DC	C	0001 1xxx	000q quuu
104h(4)	FSR	Indirect data memory address pointer								xxxx xxxx	uuuu uuuu
105h	—	Unimplemented								—	—
106h	PORTB	PORTB Data Latch when written: PORTB pins when read								xxxx 11xx	uuuu 11uu
107h	—	Unimplemented								—	—
108h	—	Unimplemented								—	—
109h	—	Unimplemented								—	—
10Ah(1,4)	PCLATH	—	—	—	Write Buffer for the upper 5 bits of the Program Counter					---0 0000	---0 0000
10Bh(4)	INTCON	GIE	PEIE	T0IE	INTE	RBIE	T0IF	INTF	RBIF	0000 000x	0000 000u
10Ch-10Fh	—	Unimplemented								—	—
Bank 3											
180h(4)	INDF	Addressing this location uses contents of FSR to address data memory (not a physical register)								0000 0000	0000 0000
181h	OPTION_REG	$\overline{RBPU}$	INTEDG	T0CS	T0SE	PSA	PS2	PS1	PS0	1111 1111	1111 1111
182h(4)	PCL	Program Counter's (PC) Least Significant Byte								0000 0000	0000 0000
183h(4)	STATUS	IRP	RP1	RP0	$\overline{TO}$	$\overline{PD}$	Z	DC	C	0001 1xxx	000q quuu
184h(4)	FSR	Indirect data memory address pointer								xxxx xxxx	uuuu uuuu
185h	—	Unimplemented								—	—
186h	TRISB	PORTB Data Direction Register								1111 1111	1111 1111
187h	—	Unimplemented								—	—
188h	—	Unimplemented								—	—
189h	—	Unimplemented								—	—
18Ah(1,4)	PCLATH	—	—	—	Write Buffer for the upper 5 bits of the Program Counter					---0 0000	---0 0000
18Bh(4)	INTCON	GIE	PEIE	T0IE	INTE	RBIE	T0IF	INTF	RBIF	0000 000x	0000 000u
18Ch-18Fh	—	Unimplemented								—	—

Legend: x = unknown, u = unchanged, q = value depends on condition, - = unimplemented read as '0'.
Shaded locations are unimplemented, read as '0'.

Note 1: The upper byte of the program counter is not directly accessible. PCLATH is a holding register for the PC<12:8> whose contents are transferred to the upper byte of the program counter.
2: Other (non power-up) resets include external reset through $\overline{MCLR}$ and Watchdog Timer Reset.
3: Bits PSPIE and PSPIF are reserved on the 28-pin devices, always maintain these bits clear.
4: These registers can be addressed from any bank.
5: These registers/bits are not implemented on the 28-pin devices read as '0'.

2.2.2.1 STATUS REGISTER

The STATUS register, shown in Figure 2-3, contains the arithmetic status of the ALU, the RESET status and the bank select bits for data memory.

The STATUS register can be the destination for any instruction, as with any other register. If the STATUS register is the destination for an instruction that affects the Z, DC or C bits, then the write to these three bits is disabled. These bits are set or cleared according to the device logic. Furthermore, the $\overline{TO}$ and $\overline{PD}$ bits are not writable. Therefore, the result of an instruction with the STATUS register as destination may be different than intended.

For example, `CLRF STATUS` will clear the upper-three bits and set the Z bit. This leaves the STATUS register as `000u u1uu` (where u = unchanged).

It is recommended, therefore, that only `BCF`, `BSF`, `SWAPF` and `MOVWF` instructions are used to alter the STATUS register because these instructions do not affect the Z, C or DC bits from the STATUS register. For other instructions, not affecting any status bits, see the "Instruction Set Summary."

> **Note 1:** The C and DC bits operate as a $\overline{borrow}$ and digit $\overline{borrow}$ bit, respectively, in subtraction. See the `SUBLW` and `SUBWF` instructions for examples.

FIGURE 2-3: STATUS REGISTER (ADDRESS 03h, 83h, 103h, 183h)

R/W-0	R/W-0	R/W-0	R-1	R-1	R/W-x	R/W-x	R/W-x
IRP	RP1	RP0	$\overline{TO}$	$\overline{PD}$	Z	DC	C
bit7							bit0

R = Readable bit
W = Writable bit
U = Unimplemented bit, read as '0'
- n = Value at POR reset

bit 7: **IRP**: Register Bank Select bit (used for indirect addressing)
1 = Bank 2, 3 (100h - 1FFh)
0 = Bank 0, 1 (00h - FFh)

bit 6-5: **RP1:RP0**: Register Bank Select bits (used for direct addressing)
`11` = Bank 3 (180h - 1FFh)
`10` = Bank 2 (100h - 17Fh)
`01` = Bank 1 (80h - FFh)
`00` = Bank 0 (00h - 7Fh)
Each bank is 128 bytes

bit 4: **$\overline{TO}$**: Time-out bit
1 = After power-up, `CLRWDT` instruction, or `SLEEP` instruction
0 = A WDT time-out occurred

bit 3: **$\overline{PD}$**: Power-down bit
1 = After power-up or by the `CLRWDT` instruction
0 = By execution of the `SLEEP` instruction

bit 2: **Z**: Zero bit
1 = The result of an arithmetic or logic operation is zero
0 = The result of an arithmetic or logic operation is not zero

bit 1: **DC**: Digit carry/$\overline{borrow}$ bit (`ADDWF`, `ADDLW`, `SUBLW`, `SUBWF` instructions) (for $\overline{borrow}$ the polarity is reversed)
1 = A carry-out from the 4th low order bit of the result occurred
0 = No carry-out from the 4th low order bit of the result

bit 0: **C**: Carry/$\overline{borrow}$ bit (`ADDWF`, `ADDLW`, `SUBLW`, `SUBWF` instructions)
1 = A carry-out from the most significant bit of the result occurred
0 = No carry-out from the most significant bit of the result occurred
Note: For $\overline{borrow}$ the polarity is reversed. A subtraction is executed by adding the two's complement of the second operand. For rotate (`RRF`, `RLF`) instructions, this bit is loaded with either the high or low order bit of the source register.

 © 1999 Microchip Technology Inc.

2.2.2.2 OPTION_REG REGISTER

The OPTION_REG register is a readable and writable register which contains various control bits to configure the TMR0 prescaler/WDT postscaler (single assignable register known also as the prescaler), the External INT Interrupt, TMR0, and the weak pull-ups on PORTB.

> **Note:** To achieve a 1:1 prescaler assignment for the TMR0 register, assign the prescaler to the Watchdog Timer.

FIGURE 2-4: OPTION_REG REGISTER (ADDRESS 81h, 181h)

R/W-1	R/W-1	R/W-1	R/W-1	R/W-1	R/W-1	R/W-1	R/W-1
$\overline{\text{RBPU}}$	INTEDG	T0CS	T0SE	PSA	PS2	PS1	PS0
bit7							bit0

R = Readable bit
W = Writable bit
U = Unimplemented bit, read as ‘0’
- n = Value at POR reset

bit 7: **$\overline{\text{RBPU}}$**: PORTB Pull-up Enable bit
1 = PORTB pull-ups are disabled
0 = PORTB pull-ups are enabled by individual port latch values

bit 6: **INTEDG**: Interrupt Edge Select bit
1 = Interrupt on rising edge of RB0/INT pin
0 = Interrupt on falling edge of RB0/INT pin

bit 5: **T0CS**: TMR0 Clock Source Select bit
1 = Transition on RA4/T0CKI pin
0 = Internal instruction cycle clock (CLKOUT)

bit 4: **T0SE**: TMR0 Source Edge Select bit
1 = Increment on high-to-low transition on RA4/T0CKI pin
0 = Increment on low-to-high transition on RA4/T0CKI pin

bit 3: **PSA**: Prescaler Assignment bit
1 = Prescaler is assigned to the WDT
0 = Prescaler is assigned to the Timer0 module

bit 2-0: **PS2:PS0**: Prescaler Rate Select bits

Bit Value	TMR0 Rate	WDT Rate
000	1 : 2	1 : 1
001	1 : 4	1 : 2
010	1 : 8	1 : 4
011	1 : 16	1 : 8
100	1 : 32	1 : 16
101	1 : 64	1 : 32
110	1 : 128	1 : 64
111	1 : 256	1 : 128

2.2.2.3 INTCON REGISTER

The INTCON Register is a readable and writable register which contains various enable and flag bits for the TMR0 register overflow, RB Port change and External RB0/INT pin interrupts.

Note: Interrupt flag bits get set when an interrupt condition occurs regardless of the state of its corresponding enable bit or the global enable bit, GIE (INTCON<7>). User software should ensure the appropriate interrupt flag bits are clear prior to enabling an interrupt.

FIGURE 2-5: INTCON REGISTER (ADDRESS 0Bh, 8Bh, 10Bh, 18Bh)

R/W-0	R/W-0	R/W-0	R/W-0	R/W-0	R/W-0	R/W-0	R/W-x
GIE	PEIE	T0IE	INTE	RBIE	T0IF	INTF	RBIF
bit7							bit0

R = Readable bit
W = Writable bit
U = Unimplemented bit, read as ‘0’
- n = Value at POR reset

bit 7: **GIE:** Global Interrupt Enable bit
1 = Enables all un-masked interrupts
0 = Disables all interrupts

bit 6: **PEIE**: Peripheral Interrupt Enable bit
1 = Enables all un-masked peripheral interrupts
0 = Disables all peripheral interrupts

bit 5: **T0IE**: TMR0 Overflow Interrupt Enable bit
1 = Enables the TMR0 interrupt
0 = Disables the TMR0 interrupt

bit 4: **IINTE**: RB0/INT External Interrupt Enable bit
1 = Enables the RB0/INT external interrupt
0 = Disables the RB0/INT external interrupt

bit 3: **RBIE**: RB Port Change Interrupt Enable bit
1 = Enables the RB port change interrupt
0 = Disables the RB port change interrupt

bit 2: **T0IF**: TMR0 Overflow Interrupt Flag bit
1 = TMR0 register has overflowed (must be cleared in software)
0 = TMR0 register did not overflow

bit 1: **INTF**: RB0/INT External Interrupt Flag bit
1 = The RB0/INT external interrupt occurred (must be cleared in software)
0 = The RB0/INT external interrupt did not occur

bit 0: **RBIF**: RB Port Change Interrupt Flag bit
1 = At least one of the RB7:RB4 pins changed state (must be cleared in software)
0 = None of the RB7:RB4 pins have changed state

 © 1999 Microchip Technology Inc.

2.2.2.4 PIE1 REGISTER

This register contains the individual enable bits for the peripheral interrupts.

> **Note:** Bit PEIE (INTCON<6>) must be set to enable any peripheral interrupt.

FIGURE 2-6: PIE1 REGISTER (ADDRESS 8Ch)

R/W-0	R/W-0	R/W-0	R/W-0	R/W-0	R/W-0	R/W-0	R/W-0
PSPIE(1)	ADIE	RCIE	TXIE	SSPIE	CCP1IE	TMR2IE	TMR1IE
bit7							bit0

R = Readable bit
W = Writable bit
U = Unimplemented bit, read as ‘0’
- n = Value at POR reset

bit 7: **PSPIE(1):** Parallel Slave Port Read/Write Interrupt Enable bit
1 = Enables the PSP read/write interrupt
0 = Disables the PSP read/write interrupt

bit 6: **ADIE**: A/D Converter Interrupt Enable bit
1 = Enables the A/D interrupt
0 = Disables the A/D interrupt

bit 5: **RCIE**: USART Receive Interrupt Enable bit
1 = Enables the USART receive interrupt
0 = Disables the USART receive interrupt

bit 4: **TXIE**: USART Transmit Interrupt Enable bit
1 = Enables the USART transmit interrupt
0 = Disables the USART transmit interrupt

bit 3: **SSPIE**: Synchronous Serial Port Interrupt Enable bit
1 = Enables the SSP interrupt
0 = Disables the SSP interrupt

bit 2: **CCP1IE**: CCP1 Interrupt Enable bit
1 = Enables the CCP1 interrupt
0 = Disables the CCP1 interrupt

bit 1: **TMR2IE**: TMR2 to PR2 Match Interrupt Enable bit
1 = Enables the TMR2 to PR2 match interrupt
0 = Disables the TMR2 to PR2 match interrupt

bit 0: **TMR1IE**: TMR1 Overflow Interrupt Enable bit
1 = Enables the TMR1 overflow interrupt
0 = Disables the TMR1 overflow interrupt

Note 1: PSPIE is reserved on the 28-pin devices, always maintain this bit clear.

2.2.2.5 PIR1 REGISTER

This register contains the individual flag bits for the peripheral interrupts.

> **Note:** Interrupt flag bits get set when an interrupt condition occurs regardless of the state of its corresponding enable bit or the global enable bit, GIE (INTCON<7>). User software should ensure the appropriate interrupt flag bits are clear prior to enabling an interrupt.

FIGURE 2-7: PIR1 REGISTER (ADDRESS 0Ch)

R/W-0	R/W-0	R-0	R-0	R/W-0	R/W-0	R/W-0	R/W-0
PSPIF(1)	ADIF	RCIF	TXIF	SSPIF	CCP1IF	TMR2IF	TMR1IF
bit7							bit0

R = Readable bit
W = Writable bit
U = Unimplemented bit, read as '0'
- n = Value at POR reset

bit 7: **PSPIF(1):** Parallel Slave Port Read/Write Interrupt Flag bit
1 = A read or a write operation has taken place (must be cleared in software)
0 = No read or write has occurred

bit 6: **ADIF**: A/D Converter Interrupt Flag bit
1 = An A/D conversion completed (must be cleared in software)
0 = The A/D conversion is not complete

bit 5: **RCIF**: USART Receive Interrupt Flag bit
1 = The USART receive buffer is full (cleared by reading RCREG)
0 = The USART receive buffer is empty

bit 4: **TXIF**: USART Transmit Interrupt Flag bit
1 = The USART transmit buffer is empty (cleared by writing to TXREG)
0 = The USART transmit buffer is full

bit 3: **SSPIF**: Synchronous Serial Port Interrupt Flag bit
1 = The transmission/reception is complete (must be cleared in software)
0 = Waiting to transmit/receive

bit 2: **CCP1IF**: CCP1 Interrupt Flag bit
Capture Mode
1 = A TMR1 register capture occurred (must be cleared in software)
0 = No TMR1 register capture occurred
Compare Mode
1 = A TMR1 register compare match occurred (must be cleared in software)
0 = No TMR1 register compare match occurred
PWM Mode
Unused in this mode

bit 1: **TMR2IF**: TMR2 to PR2 Match Interrupt Flag bit
1 = TMR2 to PR2 match occurred (must be cleared in software)
0 = No TMR2 to PR2 match occurred

bit 0: **TMR1IF**: TMR1 Overflow Interrupt Flag bit
1 = TMR1 register overflowed (must be cleared in software)
0 = TMR1 register did not overflow

Note 1: PSPIF is reserved on the 28-pin devices, always maintain this bit clear.

 © 1999 Microchip Technology Inc.

2.2.2.6 PIE2 REGISTER

This register contains the individual enable bits for the CCP2, SSP bus collision, and low voltage detect interrupts.

FIGURE 2-8: PIE2 REGISTER (ADDRESS 8Dh)

R/W-0	U-0	U-0	U-0	R/W-0	U-0	U-0	R/W-0
LVDIE	—	—	—	BCLIE	—	—	CCP2IE
bit7							bit0

R = Readable bit
W = Writable bit
U = Unimplemented bit, read as '0'
- n = Value at POR reset

bit 7 **LVDIE**: Low-voltage Detect Interrupt Enable bit
1 = LVD Interrupt is enabled
0 = LVD Interrupt is disabled

bit 6-4: **Unimplemented:** Read as '0'

bit 3: **BCLIE**: Bus Collision Interrupt Enable bit
1 = Bus Collision interrupt is enabled
0 = Bus Collision interrupt is disabled

bit 2-1: **Unimplemented:** Read as '0'

bit 0: **CCP2IE**: CCP2 Interrupt Enable bit
1 = Enables the CCP2 interrupt
0 = Disables the CCP2 interrupt

2.2.2.7 PIR2 REGISTER

This register contains the CCP2, SSP Bus Collision, and Low-voltage detect interrupt flag bits.

Note: Interrupt flag bits get set when an interrupt condition occurs regardless of the state of its corresponding enable bit or the global enable bit, GIE (INTCON<7>). User software should ensure the appropriate interrupt flag bits are clear prior to enabling an interrupt.

FIGURE 2-9: PIR2 REGISTER (ADDRESS 0Dh)

R/W-0	U-0	U-0	U-0	R/W-0	U-0	U-0	R/W-0
LVDIF	—	—	—	BCLIF	—	—	CCP2IF
bit7							bit0

R = Readable bit
W = Writable bit
U = Unimplemented bit, read as '0'
- n = Value at POR reset

bit 7: **LVDIF**: Low-voltage Detect Interrupt Flag bit
1 = The supply voltage has fallen below the specified LVD voltage (must be cleared in software)
0 = The supply voltage is greater than the specified LVD voltage

bit 6-4: **Unimplemented:** Read as '0'

bit 3: BCLIF: Bus Collision Interrupt Flag bit
1 = A bus collision has occurred while the SSP module configured in I^2C Master was transmitting (must be cleared in software)
0 = No bus collision occurred

bit 2-1: **Unimplemented:** Read as '0'

bit 0: **CCP2IF**: CCP2 Interrupt Flag bit

Capture Mode
1 = A TMR1 register capture occurred (must be cleared in software)
0 = No TMR1 register capture occurred

Compare Mode
1 = A TMR1 register compare match occurred (must be cleared in software)
0 = No TMR1 register compare match occurred

PWM Mode
Unused

 © 1999 Microchip Technology Inc.

2.2.2.8 PCON REGISTER

The Power Control (PCON) register contains a flag bit to allow differentiation between a Power-on Reset (POR) to an external $\overline{\text{MCLR}}$ Reset or WDT Reset. Those devices with brown-out detection circuitry contain an additional bit to differentiate a Brown-out Reset condition from a Power-on Reset condition.

> **Note:** $\overline{\text{BOR}}$ is unknown on Power-on Reset. It must then be set by the user and checked on subsequent resets to see if $\overline{\text{BOR}}$ is clear, indicating a brown-out has occurred. The $\overline{\text{BOR}}$ status bit is a don't care and is not necessarily predictable if the brown-out circuit is disabled (by clearing the BODEN bit in the Configuration word).

FIGURE 2-10: PCON REGISTER (ADDRESS 8Eh)

U-0	U-0	U-0	U-0	U-0	U-0	R/W-0	R/W-1
—	—	—	—	—	—	$\overline{\text{POR}}$	$\overline{\text{BOR}}$
bit7							bit0

R = Readable bit
W = Writable bit
U = Unimplemented bit, read as '0'
- n = Value at POR reset

bit 7-2: **Unimplemented:** Read as '0'

bit 1: **$\overline{\text{POR}}$**: Power-on Reset Status bit
1 = No Power-on Reset occurred
0 = A Power-on Reset occurred (must be set in software after a Power-on Reset occurs)

bit 0: **$\overline{\text{BOR}}$**: Brown-out Reset Status bit
1 = No Brown-out Reset occurred
0 = A Brown-out Reset occurred (must be set in software after a Brown-out Reset occurs)

2.3 PCL and PCLATH

The program counter (PC) specifies the address of the instruction to fetch for execution. The PC is 13 bits wide. The low byte is called the PCL register. This register is readable and writable. The high byte is called the PCH register. This register contains the PC<12:8> bits and is not directly readable or writable. All updates to the PCH register go through the PCLATH register.

2.3.1 STACK

The stack allows a combination of up to 8 program calls and interrupts to occur. The stack contains the return address from this branch in program execution.

Midrange devices have an 8 level deep x 13-bit wide hardware stack. The stack space is not part of either program or data space and the stack pointer is not readable or writable. The PC is PUSHed onto the stack when a `CALL` instruction is executed or an interrupt causes a branch. The stack is POPed in the event of a `RETURN`, `RETLW` or a `RETFIE` instruction execution. PCLATH is not modified when the stack is PUSHed or POPed.

After the stack has been PUSHed eight times, the ninth push overwrites the value that was stored from the first push. The tenth push overwrites the second push (and so on).

2.4 Program Memory Paging

PIC16C77X devices are capable of addressing a continuous 8K word block of program memory. The `CALL` and `GOTO` instructions provide only 11 bits of address to allow branching within any 2K program memory page. When doing a `CALL` or `GOTO` instruction the upper 2 bits of the address are provided by PCLATH<4:3>. When doing a `CALL` or `GOTO` instruction, the user must ensure that the page select bits are programmed so that the desired program memory page is addressed. If a return from a `CALL` instruction (or interrupt) is executed, the entire 13-bit PC is pushed onto the stack. Therefore, manipulation of the PCLATH<4:3> bits are not required for the return instructions (which POPs the address from the stack).

 © 1999 Microchip Technology Inc.

The INDF register is not a physical register. Addressing INDF actually addresses the register whose address is contained in the FSR register (FSR is a *pointer*). This is indirect addressing.

Reading INDF itself indirectly (FSR = 0) will produce 00h. Writing to the INDF register indirectly results in a no-operation (although STATUS bits may be affected).

A simple program to clear RAM locations 20h-2Fh using indirect addressing is shown in Example 2-1.

EXAMPLE 2-1: HOW TO CLEAR RAM USING INDIRECT ADDRESSING

```
        movlw  0x20  ;initialize pointer
        movwf  FSR   ;  to RAM
NEXT    clrf   INDF  ;clear INDF register
        incf   FSR   ;inc pointer
        btfss  FSR,4 ;all done?
        goto   NEXT  ;NO, clear next
CONTINUE
        :            ;YES, continue
```

An effective 9-bit address is obtained by concatenating the 8-bit FSR register and the IRP bit (STATUS<7>), as shown in Figure 2-11.

FIGURE 2-11: DIRECT/INDIRECT ADDRESSING

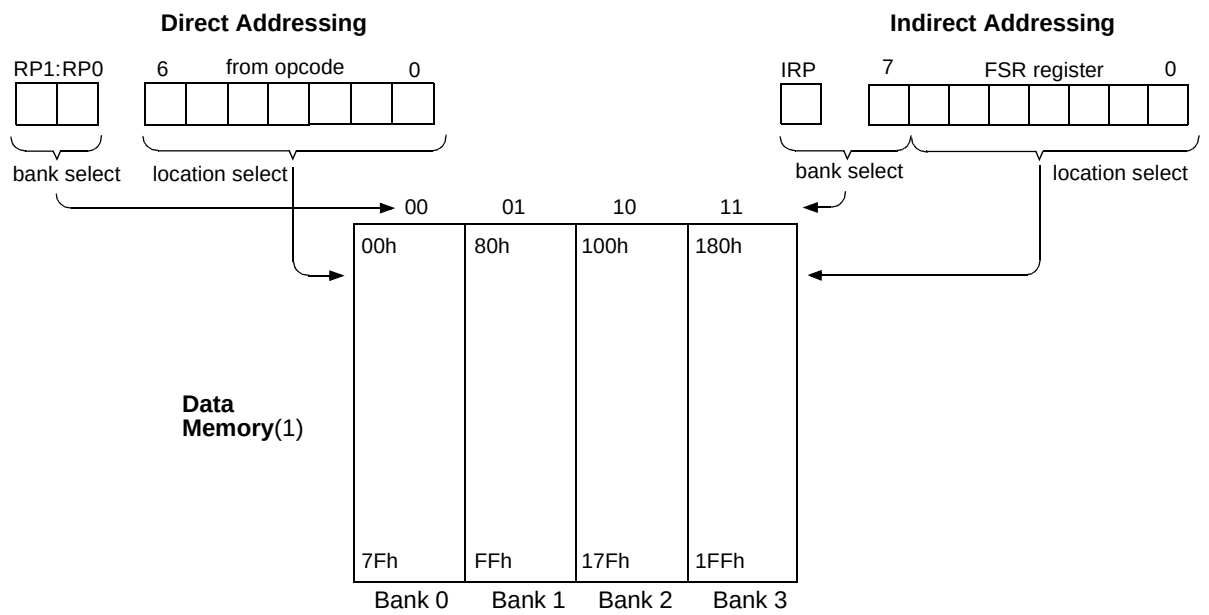

Note 1: For register file map detail see Figure 2-2.

NOTES:

 © 1999 Microchip Technology Inc.

3.0 I/O PORTS

Some pins for these I/O ports are multiplexed with an alternate function for the peripheral features on the device. In general, when a peripheral is enabled, that pin may not be used as a general purpose I/O pin.

Additional information on I/O ports may be found in the PICmicro™ Mid-Range Reference Manual, (DS33023).

3.1 PORTA and the TRISA Register

PORTA is a 6-bit wide bi-directional port for the 40/44 pin devices and is 5-bits wide for the 28-pin devices. PORTA<5> is not on the 28-pin devices. The corresponding data direction register is TRISA. Setting a TRISA bit (=1) will make the corresponding PORTA pin an input, i.e., put the corresponding output driver in a hi-impedance mode. Clearing a TRISA bit (=0) will make the corresponding PORTA pin an output, i.e., put the contents of the output latch on the selected pin.

Reading the PORTA register reads the status of the pins whereas writing to it will write to the port latch. All write operations are read-modify-write operations. Therefore a write to a port implies that the port pins are read, this value is modified, and then written to the port data latch.

Pin RA4 is multiplexed with the Timer0 module clock input to become the RA4/T0CKI pin. The RA4/T0CKI pin is a Schmitt Trigger input and an open drain output. All other RA port pins have TTL input levels and full CMOS output drivers.

Other PORTA pins are multiplexed with analog inputs and analog VREF inputs and precision on-board references (VRL/VRH). The operation of each pin is selected by clearing/setting the control bits in the ADCON1 register (A/D Control Register1).

Note:	On a Power-on Reset, these pins are configured as analog inputs and read as '0'.

The TRISA register controls the direction of the RA pins, even when they are being used as analog inputs. The user must ensure the bits in the TRISA register are maintained set when using them as analog inputs.

EXAMPLE 3-1: INITIALIZING PORTA

```
BCF     STATUS, RP0  ;
CLRF    PORTA        ; Initialize PORTA by
                     ; clearing output
                     ; data latches
BSF     STATUS, RP0  ; Select Bank 1
MOVLW   0xCF         ; Value used to
                     ; initialize data
                     ; direction
MOVWF   TRISA        ; Set RA<3:0> as inputs
                     ; RA<5:4> as outputs
                     ; TRISA<7:6> are always
                     ; read as '0'.
```

FIGURE 3-1: BLOCK DIAGRAM OF RA3:RA2 PINS

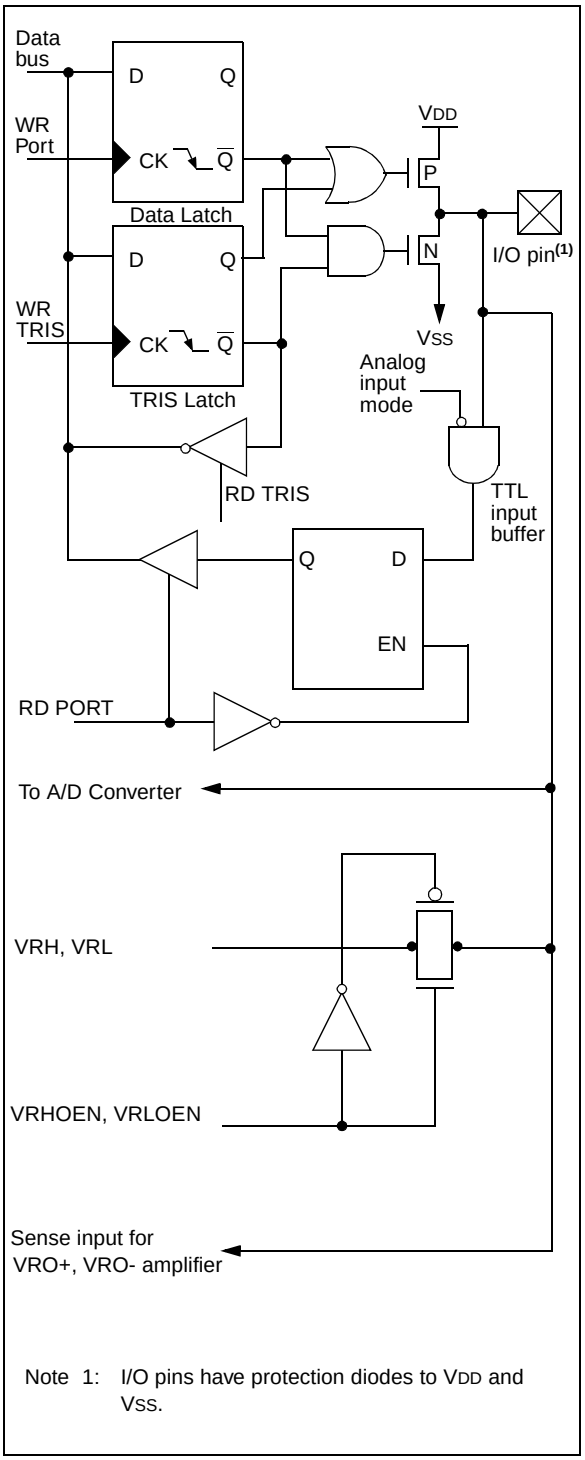

Note 1: I/O pins have protection diodes to VDD and VSS.

FIGURE 3-2: BLOCK DIAGRAM OF RA1:RA0 AND RA5 PINS

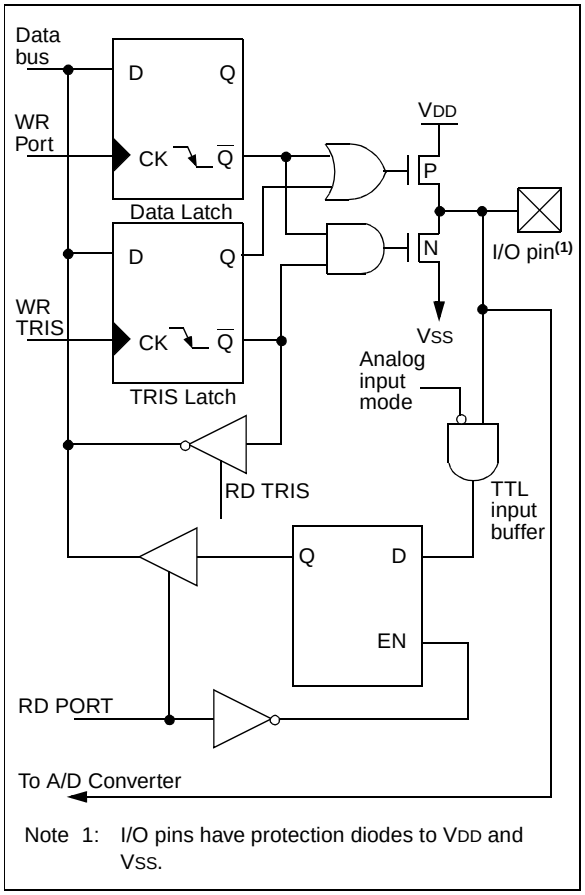

FIGURE 3-3: BLOCK DIAGRAM OF RA4/T0CKI PIN

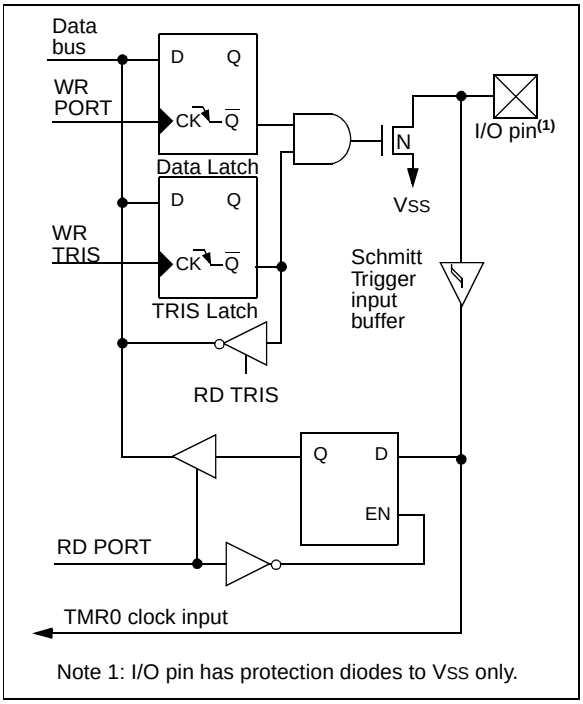

TABLE 3-1 PORTA FUNCTIONS

Name	Bit#	Buffer	Function
RA0/AN0	bit0	TTL	Input/output or analog input0
RA1/AN1	bit1	TTL	Input/output or analog input1
RA2/AN2/VREF-/VRL	bit2	TTL	Input/output or analog input2 or VREF- input or internal reference voltage low
RA3/AN3/VREF+/VRH	bit3	TTL	Input/output or analog input or VREF+ input or output of internal reference voltage high
RA4/T0CKI	bit4	ST	Input/output or external clock input for Timer0 Output is open drain type
RA5/AN4(1)	bit5	TTL	Input/output or analog input

Legend: TTL = TTL input, ST = Schmitt Trigger input
Note 1: RA5 is reserved on the 28-pin devices, maintain this bit clear.

TABLE 3-2 SUMMARY OF REGISTERS ASSOCIATED WITH PORTA

Address	Name	Bit 7	Bit 6	Bit 5	Bit 4	Bit 3	Bit 2	Bit 1	Bit 0	Value on: POR, BOR	Value on all other resets
05h	PORTA(1)	—	—	RA5	RA4	RA3	RA2	RA1	RA0	--0x 0000	--0u 0000
85h	TRISA(1)	—	—	PORTA Data Direction Register						--11 1111	--11 1111
9Fh	ADCON1	ADFM	VCFG2	VCFG1	VCFG0	PCFG3	PCFG2	PCFG1	PCFG0	0000 0000	0000 0000

Legend: x = unknown, u = unchanged, - = unimplemented locations read as '0'. Shaded cells are not used by PORTA.
Note 1: PORTA<5>, TRISA<5> are reserved on the 28-pin devices, maintain these bits clear.

 © 1999 Microchip Technology Inc.

3.2 PORTB and the TRISB Register

PORTB is an 8-bit wide bi-directional port. The corresponding data direction register is TRISB. Setting a TRISB bit (=1) will make the corresponding PORTB pin an input, i.e., put the corresponding output driver in a hi-impedance mode. Clearing a TRISB bit (=0) will make the corresponding PORTB pin an output, i.e., put the contents of the output latch on the selected pin.

EXAMPLE 3-1: INITIALIZING PORTB

```
BCF     STATUS, RP0  ;
CLRF    PORTB        ; Initialize PORTB by
                     ; clearing output
                     ; data latches
BSF     STATUS, RP0  ; Select Bank 1
MOVLW   0xCF         ; Value used to
                     ; initialize data
                     ; direction
MOVWF   TRISB        ; Set RB<3:0> as inputs
                     ; RB<5:4> as outputs
                     ; RB<7:6> as inputs
```

Each of the PORTB pins has a weak internal pull-up. A single control bit can turn on all the pull-ups. This is performed by clearing bit $\overline{\text{RBPU}}$ (OPTION_REG<7>). The weak pull-up is automatically turned off when the port pin is configured as an output. The pull-ups are disabled on a Power-on Reset.

The RB0 pin is multiplexed with the external interrupt (RB0/INT).

FIGURE 3-4: BLOCK DIAGRAM OF RB0 PIN

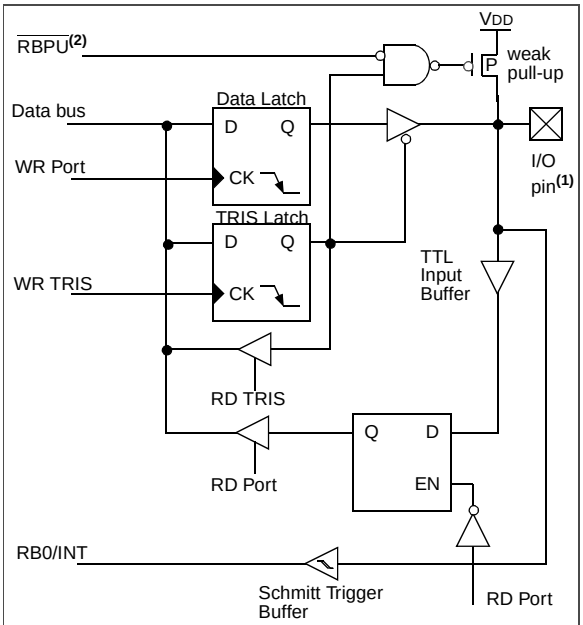

Note 1: I/O pins have diode protection to VDD and VSS.
2: To enable weak pull-ups, set the appropriate TRIS bit(s) and clear the $\overline{\text{RBPU}}$ bit (OPTION_REG<7>).

The RB1 pin is multiplexed with the SSP module slave select (RB1/$\overline{\text{SS}}$).

FIGURE 3-5: BLOCK DIAGRAM OF RB1/$\overline{\text{SS}}$ PIN

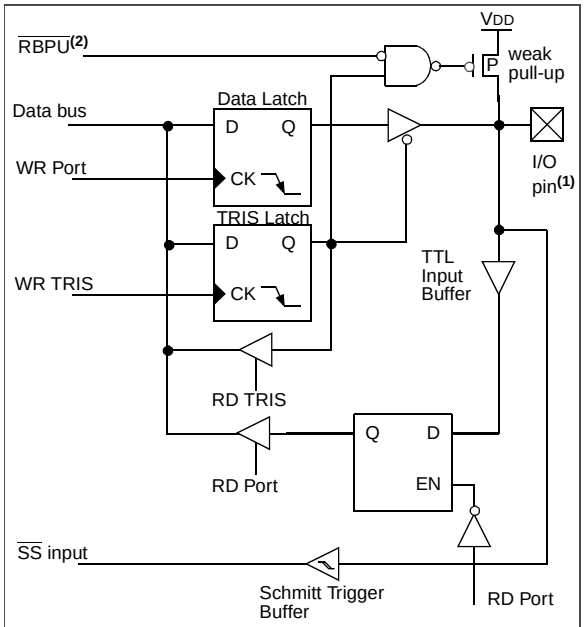

Note 1: I/O pins have diode protection to VDD and VSS.
2: To enable weak pull-ups, set the appropriate TRIS bit(s) and clear the $\overline{\text{RBPU}}$ bit (OPTION_REG<7>).

The RB2 pin is multiplexed with analog channel 8 (RB2/AN8).

FIGURE 3-6: BLOCK DIAGRAM OF RB2/AN8 PIN

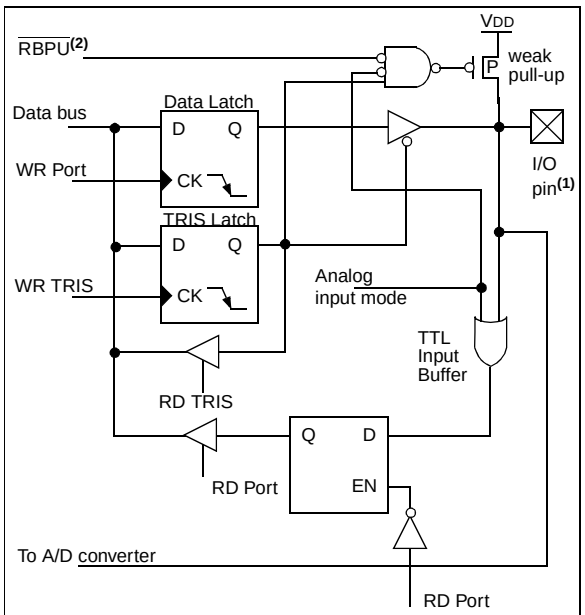

Note 1: I/O pins have diode protection to VDD and VSS.
2: To enable weak pull-ups, set the appropriate TRIS bit(s) and clear the $\overline{\text{RBPU}}$ bit (OPTION_REG<7>).

The RB3 pin is multiplexed with analog channel 9 and the low voltage detect input (RB3/AN9/LVDIN)

FIGURE 3-7: BLOCK DIAGRAM OF RB3/AN9/LVDIN PIN

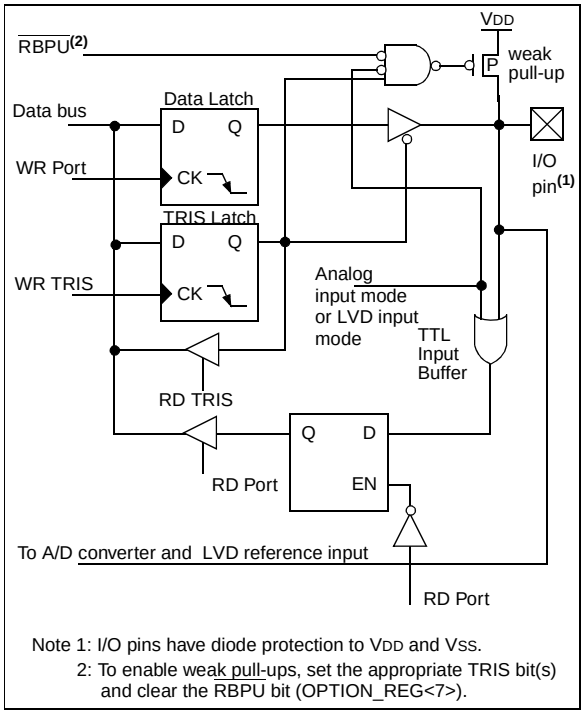

Four of PORTB's pins, RB7:RB4, have an interrupt on change feature. Only pins configured as inputs can cause this interrupt to occur (i.e. any RB7:RB4 pin configured as an output is excluded from the interrupt on change comparison). The input pins (of RB7:RB4) are compared with the old value latched on the last read of PORTB. The "mismatch" outputs of RB7:RB4 are OR'ed together to generate the RB Port Change Interrupt with flag bit RBIF (INTCON<0>).

This interrupt can wake the device from SLEEP. The user, in the interrupt service routine, can clear the interrupt in the following manner:

a) Any read or write of PORTB. This will end the mismatch condition.

b) Clear flag bit RBIF.

A mismatch condition will continue to set flag bit RBIF. Reading PORTB will end the mismatch condition, and allow flag bit RBIF to be cleared.

The interrupt on change feature is recommended for wake-up on key depression operation and operations where PORTB is only used for the interrupt on change feature. Polling of PORTB is not recommended while using the interrupt on change feature.

FIGURE 3-8: BLOCK DIAGRAM OF RB7:RB4 PINS

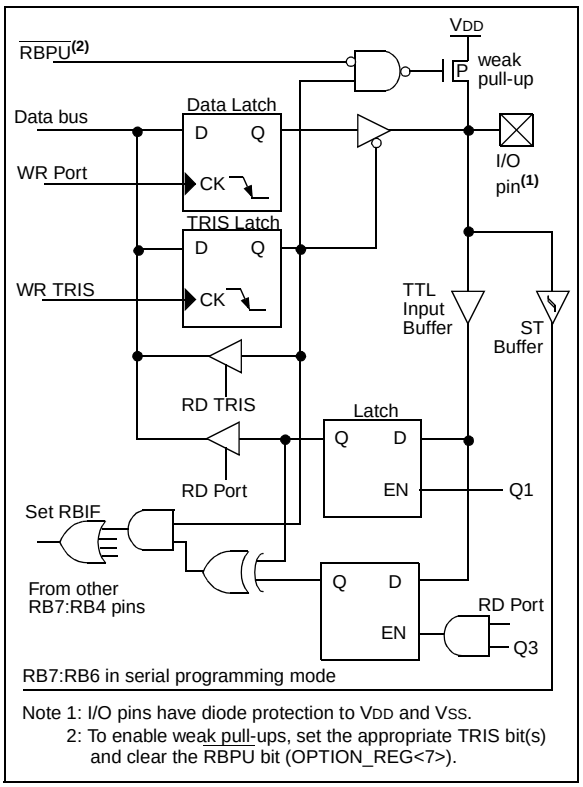

 © 1999 Microchip Technology Inc.

TABLE 3-3 PORTB FUNCTIONS

Name	Bit#	Buffer	Function
RB0/INT	bit0	TTL/ST(1)	Input/output pin or external interrupt input. Internal software programmable weak pull-up.
RB1/$\overline{SS}$	bit1	TTL/ST(3)	Input/output pin or SSP slave select. Internal software programmable weak pull-up.
RB2/AN8	bit2	TTL	Input/output pin or analog input8. Internal software programmable weak pull-up.
RB3/AN9/LVDIN	bit3	TTL	Input/output pin or analog input9 or Low-voltage detect input. Internal software programmable weak pull-up.
RB4	bit4	TTL	Input/output pin (with interrupt on change). Internal software programmable weak pull-up.
RB5	bit5	TTL	Input/output pin (with interrupt on change). Internal software programmable weak pull-up.
RB6	bit6	TTL/ST(2)	Input/output pin (with interrupt on change). Internal software programmable weak pull-up. Serial programming clock.
RB7	bit7	TTL/ST(2)	Input/output pin (with interrupt on change). Internal software programmable weak pull-up. Serial programming data.

Legend: TTL = TTL input, ST = Schmitt Trigger input
Note 1: This buffer is a Schmitt Trigger input when configured as the external interrupt.
2: This buffer is a Schmitt Trigger input when used in serial programming mode.
3: This buffer is a Schmitt Trigger input when used as the SSP slave select.

TABLE 3-4 SUMMARY OF REGISTERS ASSOCIATED WITH PORTB

Address	Name	Bit 7	Bit 6	Bit 5	Bit 4	Bit 3	Bit 2	Bit 1	Bit 0	Value on: POR, BOR	Value on all other resets
06h, 106h	PORTB	RB7	RB6	RB5	RB4	RB3	RB2	RB1	RB0	xxxx 11xx	uuuu 11uu
86h, 186h	TRISB	PORTB Data Direction Register								1111 1111	1111 1111
81h, 181h	OPTION_REG	$\overline{RBPU}$	INTEDG	T0CS	T0SE	PSA	PS2	PS1	PS0	1111 1111	1111 1111
9Fh	ADCON1	ADFM	VCFG2	VCFG1	VCFG0	PCFG3	PCFG2	PCFG1	PCFG0	0000 0000	0000 0000

Legend: x = unknown, u = unchanged. Shaded cells are not used by PORTB.

3.3 PORTC and the TRISC Register

PORTC is an 8-bit wide bi-directional port. The corresponding data direction register is TRISC. Setting a TRISC bit (=1) will make the corresponding PORTC pin an input, i.e., put the corresponding output driver in a hi-impedance mode. Clearing a TRISC bit (=0) will make the corresponding PORTC pin an output, i.e., put the contents of the output latch on the selected pin.

PORTC is multiplexed with several peripheral functions (Table 3-5). PORTC pins have Schmitt Trigger input buffers.

When enabling peripheral functions, care should be taken in defining TRIS bits for each PORTC pin. Some peripherals override the TRIS bit to make a pin an output, while other peripherals override the TRIS bit to make a pin an input. Since the TRIS bit override is in effect while the peripheral is enabled, read-modify-write instructions (`BSF, BCF, XORWF`) with TRISC as destination should be avoided. The user should refer to the corresponding peripheral section for the correct TRIS bit settings.

EXAMPLE 3-1: INITIALIZING PORTC

```
BCF     STATUS, RP0  ; Select Bank 0
CLRF    PORTC        ; Initialize PORTC by
                     ; clearing output
                     ; data latches
BSF     STATUS, RP0  ; Select Bank 1
MOVLW   0xCF         ; Value used to
                     ; initialize data
                     ; direction
MOVWF   TRISC        ; Set RC<3:0> as inputs
                     ; RC<5:4> as outputs
                     ; RC<7:6> as inputs
```

FIGURE 3-9: PORTC BLOCK DIAGRAM (PERIPHERAL OUTPUT OVERRIDE)

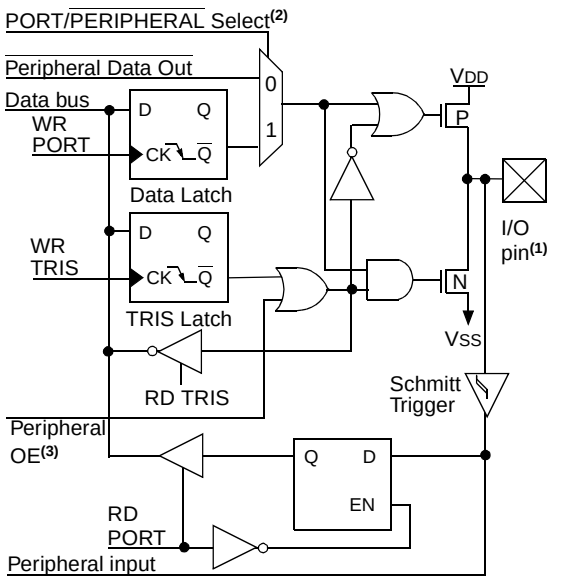

Note 1: I/O pins have diode protection to VDD and VSS.
2: Port/Peripheral select signal selects between port data and peripheral output.
3: Peripheral OE (output enable) is only activated if peripheral select is active.

 © 1999 Microchip Technology Inc.

TABLE 3-5 PORTC FUNCTIONS

Name	Bit#	Buffer Type	Function
RC0/T1OSO/T1CKI	bit0	ST	Input/output port pin or Timer1 oscillator output/Timer1 clock input
RC1/T1OSI/CCP2	bit1	ST	Input/output port pin or Timer1 oscillator input or Capture2 input/Compare2 output/PWM2 output
RC2/CCP1	bit2	ST	Input/output port pin or Capture1 input/Compare1 output/PWM1 output
RC3/SCK/SCL	bit3	ST	RC3 can also be the synchronous serial clock for both SPI and I^2C modes.
RC4/SDI/SDA	bit4	ST	RC4 can also be the SPI Data In (SPI mode) or data I/O (I^2C mode).
RC5/SDO	bit5	ST	Input/output port pin or Synchronous Serial Port data output
RC6/TX/CK	bit6	ST	Input/output port pin or USART Asynchronous transmit or Synchronous clock
RC7/RX/DT	bit7	ST	Input/output port pin or USART Asynchronous receive or Synchronous data

Legend: ST = Schmitt Trigger input

TABLE 3-6 SUMMARY OF REGISTERS ASSOCIATED WITH PORTC

Address	Name	Bit 7	Bit 6	Bit 5	Bit 4	Bit 3	Bit 2	Bit 1	Bit 0	Value on: POR, BOR	Value on all other resets
07h	PORTC	RC7	RC6	RC5	RC4	RC3	RC2	RC1	RC0	xxxx xxxx	uuuu uuuu
87h	TRISC	PORTC Data Direction Register								1111 1111	1111 1111

Legend: x = unknown, u = unchanged.

3.4 PORTD and TRISD Registers

This section is applicable to the 40/44-pin devices only.

PORTD is an 8-bit port with Schmitt Trigger input buffers. Each pin is individually configurable as an input or output.

PORTD can be configured as an 8-bit wide microprocessor port (parallel slave port) by setting control bit PSPMODE (TRISE<4>). In this mode, the input buffers are TTL.

FIGURE 3-10: PORTD BLOCK DIAGRAM (IN I/O PORT MODE)

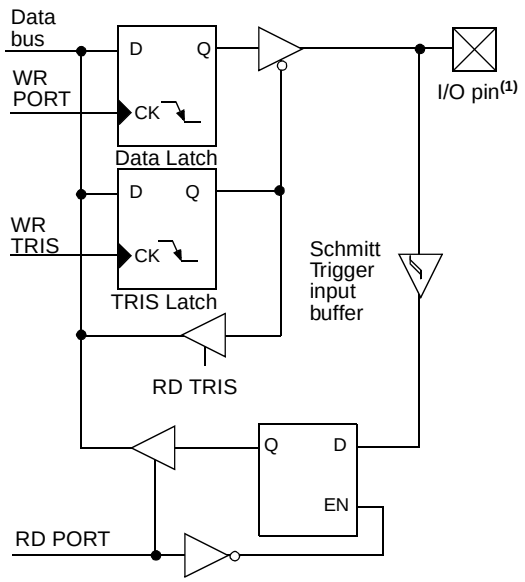

Note 1: I/O pins have protection diodes to VDD and VSS.

TABLE 3-7 PORTD FUNCTIONS

Name	Bit#	Buffer Type	Function
RD0/PSP0	bit0	ST/TTL(1)	Input/output port pin or parallel slave port bit0
RD1/PSP1	bit1	ST/TTL(1)	Input/output port pin or parallel slave port bit1
RD2/PSP2	bit2	ST/TTL(1)	Input/output port pin or parallel slave port bit2
RD3/PSP3	bit3	ST/TTL(1)	Input/output port pin or parallel slave port bit3
RD4/PSP4	bit4	ST/TTL(1)	Input/output port pin or parallel slave port bit4
RD5/PSP5	bit5	ST/TTL(1)	Input/output port pin or parallel slave port bit5
RD6/PSP6	bit6	ST/TTL(1)	Input/output port pin or parallel slave port bit6
RD7/PSP7	bit7	ST/TTL(1)	Input/output port pin or parallel slave port bit7

Legend: ST = Schmitt Trigger input TTL = TTL input
Note 1: Input buffers are Schmitt Triggers when in I/O mode and TTL buffer when in Parallel Slave Port Mode.

TABLE 3-8 SUMMARY OF REGISTERS ASSOCIATED WITH PORTD

Address	Name	Bit 7	Bit 6	Bit 5	Bit 4	Bit 3	Bit 2	Bit 1	Bit 0	Value on: POR, BOR	Value on all other resets
08h	PORTD	RD7	RD6	RD5	RD4	RD3	RD2	RD1	RD0	xxxx xxxx	uuuu uuuu
88h	TRISD	PORTD Data Direction Register								1111 1111	1111 1111
89h	TRISE	IBF	OBF	IBOV	PSPMODE	—	PORTE Data Direction Bits			0000 -111	0000 -111

Legend: x = unknown, u = unchanged, - = unimplemented read as '0'. Shaded cells are not used by PORTD.

 © 1999 Microchip Technology Inc.

3.5 PORTE and TRISE Register

This section is applicable to the 40/44-pin devices only.

PORTE has three pins RE0/$\overline{RD}$/AN5, RE1/$\overline{WR}$/AN6 and RE2/$\overline{CS}$/AN7, which are individually configurable as inputs or outputs. These pins have Schmitt Trigger input buffers.

I/O PORTE becomes control inputs for the microprocessor port when bit PSPMODE (TRISE<4>) is set. In this mode, the user must make sure that the TRISE<2:0> bits are set (pins are configured as digital inputs). Ensure ADCON1 is configured for digital I/O. In this mode the input buffers are TTL.

Figure 3-12 shows the TRISE register, which also controls the parallel slave port operation.

PORTE pins are multiplexed with analog inputs. When selected as an analog input, these pins will read as ’0’s.

TRISE controls the direction of the RE pins, even when they are being used as analog inputs. The user must make sure to keep the pins configured as inputs when using them as analog inputs.

Note:	On a Power-on Reset these pins are configured as analog inputs.

FIGURE 3-11: PORTE BLOCK DIAGRAM (IN I/O PORT MODE)

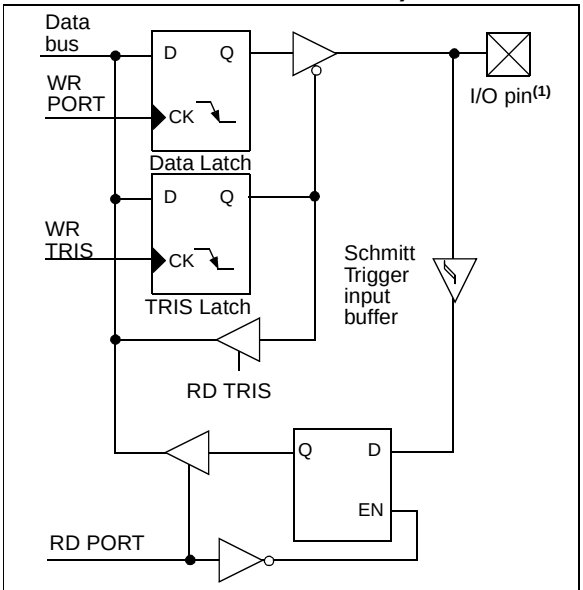

Note 1: I/O pins have protection diodes to V_{DD} and V_{SS}.

FIGURE 3-12: TRISE REGISTER (ADDRESS 89h)

R-0	R-0	R/W-0	R/W-0	U-0	R/W-1	R/W-1	R/W-1
IBF	OBF	IBOV	PSPMODE	—	bit2	bit1	bit0
bit7							bit0

R = Readable bit
W = Writable bit
U = Unimplemented bit, read as ‘0’
- n = Value at POR reset

bit 7 : **IBF:** Input Buffer Full Status bit
1 = A word has been received and is waiting to be read by the CPU
0 = No word has been received

bit 6: **OBF**: Output Buffer Full Status bit
1 = The output buffer still holds a previously written word
0 = The output buffer has been read

bit 5: **IBOV**: Input Buffer Overflow Detect bit (in microprocessor mode)
1 = A write occurred when a previously input word has not been read (must be cleared in software)
0 = No overflow occurred

bit 4: **PSPMODE**: Parallel Slave Port Mode Select bit
1 = Parallel slave port mode
0 = General purpose I/O mode

bit 3: **Unimplemented**: Read as '0'

PORTE Data Direction Bits

bit 2: **Bit2**: Direction Control bit for pin RE2/$\overline{CS}$/AN7
1 = Input
0 = Output

bit 1: **Bit1**: Direction Control bit for pin RE1/$\overline{WR}$/AN6
1 = Input
0 = Output

bit 0: **Bit0**: Direction Control bit for pin RE0/$\overline{RD}$/AN5
1 = Input
0 = Output

TABLE 3-9 PORTE FUNCTIONS

Name	Bit#	Buffer Type	Function
RE0/$\overline{RD}$/AN5	bit0	ST/TTL(1)	Input/output port pin or read control input in parallel slave port mode or analog input: $\overline{RD}$ 1 = Not a read operation 0 = Read operation. Reads PORTD register (if chip selected)
RE1/$\overline{WR}$/AN6	bit1	ST/TTL(1)	Input/output port pin or write control input in parallel slave port mode or analog input: $\overline{WR}$ 1 = Not a write operation 0 = Write operation. Writes PORTD register (if chip selected)
RE2/$\overline{CS}$/AN7	bit2	ST/TTL(1)	Input/output port pin or chip select control input in parallel slave port mode or analog input: $\overline{CS}$ 1 = Device is not selected 0 = Device is selected

Legend: ST = Schmitt Trigger input TTL = TTL input
Note 1: Input buffers are Schmitt Triggers when in I/O mode and TTL buffers when in Parallel Slave Port Mode.

TABLE 3-10 SUMMARY OF REGISTERS ASSOCIATED WITH PORTE

Addr	Name	Bit 7	Bit 6	Bit 5	Bit 4	Bit 3	Bit 2	Bit 1	Bit 0	Value on: POR, BOR	Value on all other resets
09h	PORTE	—	—	—	—	—	RE2	RE1	RE0	---- -xxx	---- -uuu
89h	TRISE	IBF	OBF	IBOV	PSPMODE	—	PORTE Data Direction Bits			0000 -111	0000 -111
9Fh	ADCON1	ADFM	VCFG2	VCFG1	VCFG0	PCFG3	PCFG2	PCFG1	PCFG0	0000 0000	0000 0000

Legend: x = unknown, u = unchanged, - = unimplemented read as '0'. Shaded cells are not used by PORTE.

 © 1999 Microchip Technology Inc.

3.6 Parallel Slave Port

The Parallel Slave Port is implemented on the 40/44-pin devices only.

PORTD operates as an 8-bit wide Parallel Slave Port, or microprocessor port when control bit PSPMODE (TRISE<4>) is set. In slave mode it is asynchronously readable and writable by the external world through $\overline{RD}$ control input pin RE0/$\overline{RD}$ and $\overline{WR}$ control input pin RE1/$\overline{WR}$.

It can directly interface to an 8-bit microprocessor data bus. The external microprocessor can read or write the PORTD latch as an 8-bit latch. Setting bit PSPMODE enables port pin RE0/$\overline{RD}$ to be the $\overline{RD}$ input, RE1/$\overline{WR}$ to be the $\overline{WR}$ input and RE2/$\overline{CS}$ to be the $\overline{CS}$ (chip select) input. For this functionality, the corresponding data direction bits of the TRISE register (TRISE<2:0>) must be configured as inputs (set). The configuration bits, PCFG3:PCFG0 (ADCON1<3:0>) must be configured to make pins RE2:RE0 as digital I/O.

A write to the PSP occurs when both the $\overline{CS}$ and $\overline{WR}$ lines are first detected low. A read from the PSP occurs when both the $\overline{CS}$ and $\overline{RD}$ lines are first detected low.

FIGURE 3-13: PORTD AND PORTE BLOCK DIAGRAM (PARALLEL SLAVE PORT)

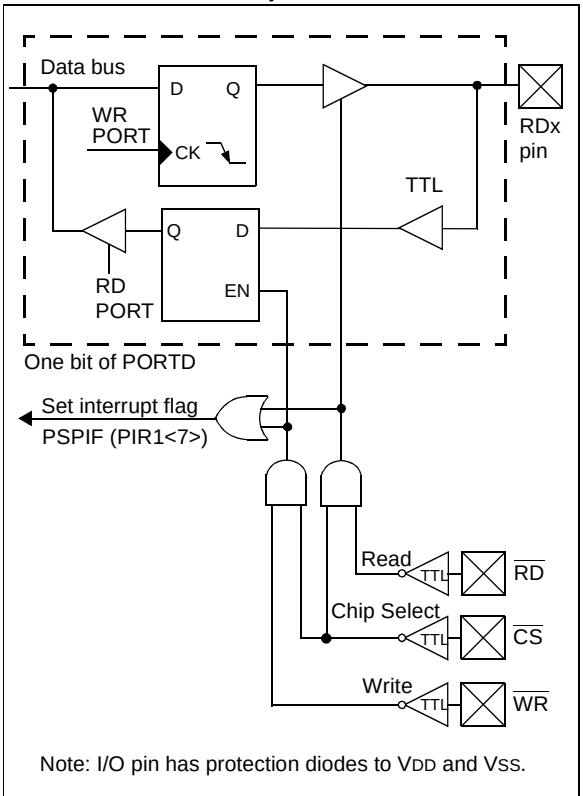

FIGURE 3-14: PARALLEL SLAVE PORT WRITE WAVEFORMS

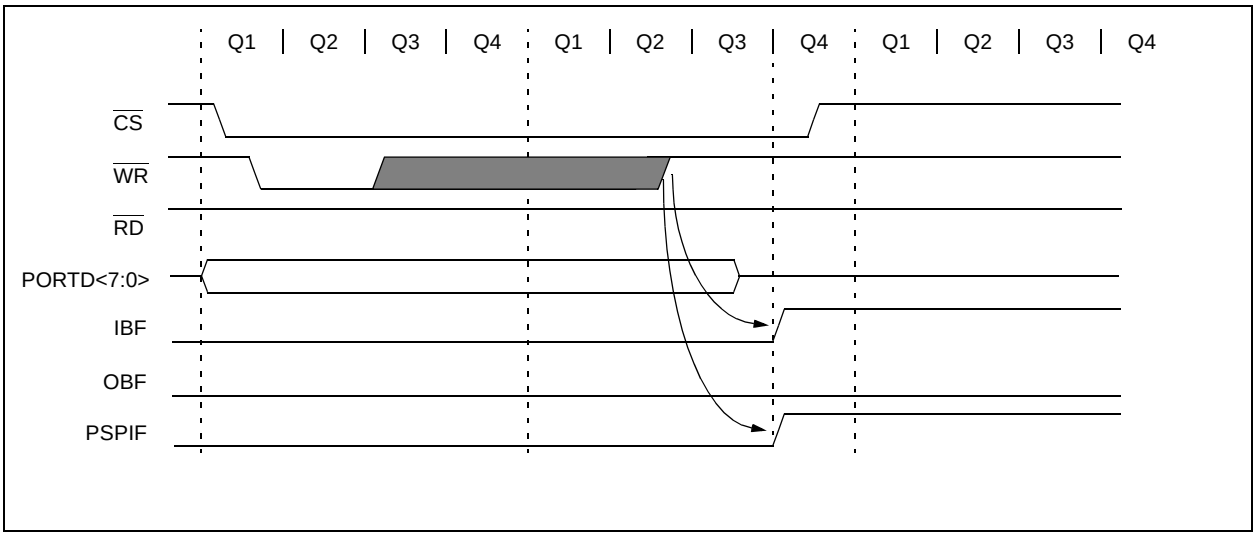

FIGURE 3-15: PARALLEL SLAVE PORT READ WAVEFORMS

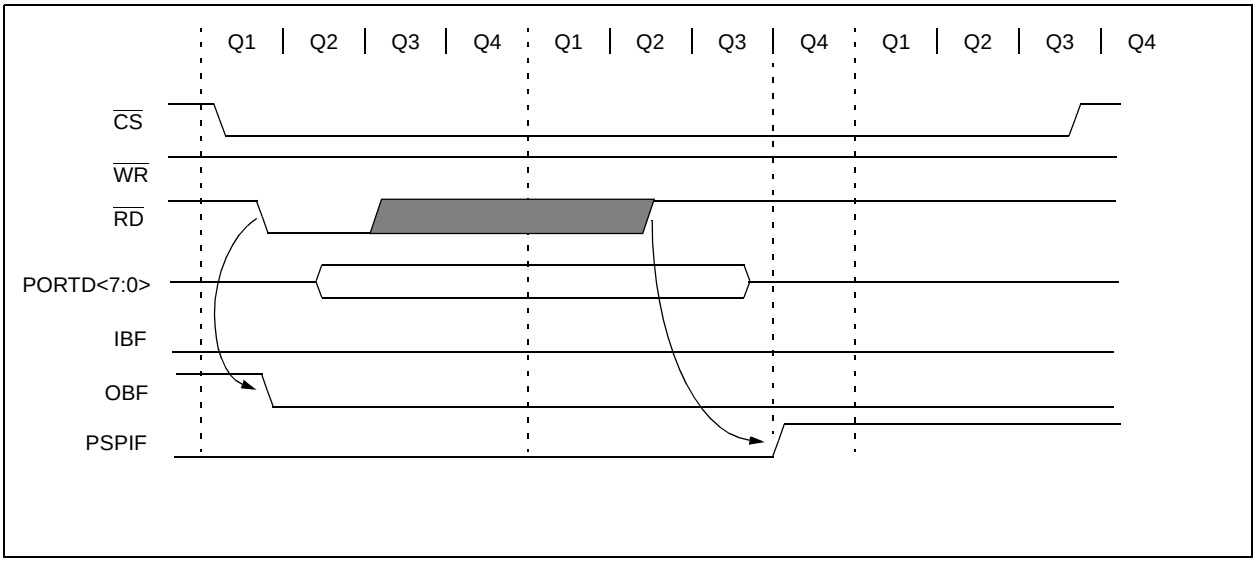

TABLE 3-11 REGISTERS ASSOCIATED WITH PARALLEL SLAVE PORT

Address	Name	Bit 7	Bit 6	Bit 5	Bit 4	Bit 3	Bit 2	Bit 1	Bit 0	Value on: POR, BOR	Value on all other resets
08h	PORTD	Port data latch when written: Port pins when read								xxxx xxxx	uuuu uuuu
09h	PORTE	—	—	—	—	—	RE2	RE1	RE0	---- -xxx	---- -uuu
89h	TRISE	IBF	OBF	IBOV	PSPMODE	—	PORTE Data Direction Bits			0000 -111	0000 -111
0Ch	PIR1	PSPIF	ADIF	RCIF	TXIF	SSPIF	CCP1IF	TMR2IF	TMR1IF	0000 0000	0000 0000
8Ch	PIE1	PSPIE	ADIE	RCIE	TXIE	SSPIE	CCP1IE	TMR2IE	TMR1IE	0000 0000	0000 0000
9Fh	ADCON1	ADFM	VCFG2	VCFG1	VCFG0	PCFG3	PCFG2	PCFG1	PCFG0	0000 0000	0000 0000

Legend: x = unknown, u = unchanged, - = unimplemented read as '0'. Shaded cells are not used by the Parallel Slave Port.

 © 1999 Microchip Technology Inc.

4.0 TIMER0 MODULE

The Timer0 module timer/counter has the following features:

- 8-bit timer/counter
- Readable and writable
- Internal or external clock select
- Edge select for external clock
- 8-bit software programmable prescaler
- Interrupt on overflow from FFh to 00h

Figure 4-1 is a simplified block diagram of the Timer0 module.

Additional information on timer modules is available in the PICmicro™ Mid-Range Reference Manual, (DS33023).

4.1 Timer0 Operation

Timer0 can operate as a timer or as a counter.

Timer mode is selected by clearing bit T0CS (OPTION_REG<5>). In timer mode, the Timer0 module will increment every instruction cycle (without prescaler). If the TMR0 register is written, the increment is inhibited for the following two instruction cycles. The user can work around this by writing an adjusted value to the TMR0 register.

Counter mode is selected by setting bit T0CS (OPTION_REG<5>). In counter mode, Timer0 will increment either on every rising or falling edge of pin RA4/T0CKI. The incrementing edge is determined by the Timer0 Source Edge Select bit T0SE (OPTION_REG<4>). Clearing bit T0SE selects the rising edge. Restrictions on the external clock input are discussed in below.

When an external clock input is used for Timer0, it must meet certain requirements. The requirements ensure the external clock can be synchronized with the internal phase clock (TOSC). Also, there is a delay in the actual incrementing of Timer0 after synchronization.

Additional information on external clock requirements is available in the PICmicro™ Mid-Range Reference Manual, (DS33023).

4.2 Prescaler

An 8-bit counter is available as a prescaler for the Timer0 module, or as a postscaler for the Watchdog Timer, respectively (Figure 4-2). For simplicity, this counter is being referred to as “prescaler” throughout this data sheet. Note that there is only one prescaler available which is mutually exclusively shared between the Timer0 module and the Watchdog Timer. Thus, a prescaler assignment for the Timer0 module means that there is no prescaler for the Watchdog Timer, and vice-versa.

The prescaler is not readable or writable.

The PSA and PS2:PS0 bits (OPTION_REG<3:0>) determine the prescaler assignment and prescale ratio.

Clearing bit PSA will assign the prescaler to the Timer0 module. When the prescaler is assigned to the Timer0 module, prescale values of 1:2, 1:4, ..., 1:256 are selectable.

Setting bit PSA will assign the prescaler to the Watchdog Timer (WDT). When the prescaler is assigned to the WDT, prescale values of 1:1, 1:2, ..., 1:128 are selectable.

When assigned to the Timer0 module, all instructions writing to the TMR0 register (e.g. `CLRF 1, MOVWF 1, BSF 1,x`....etc.) will clear the prescaler. When assigned to WDT, a `CLRWDT` instruction will clear the prescaler along with the WDT.

Note:	Writing to TMR0 when the prescaler is assigned to Timer0 will clear the prescaler count, but will not change the prescaler assignment.

FIGURE 4-1: TIMER0 BLOCK DIAGRAM

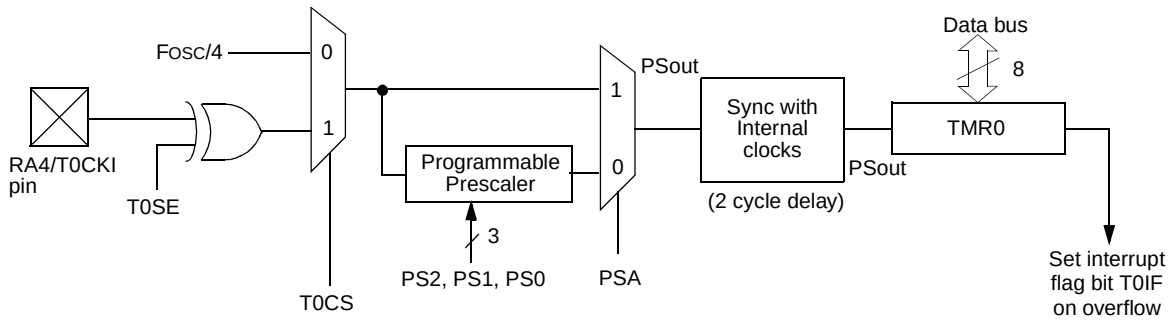

Note 1: T0CS, T0SE, PSA, PS2:PS0 (OPTION_REG<5:0>).
2: The prescaler is shared with Watchdog Timer (refer to Figure 4-2 for detailed block diagram).

4.2.1 SWITCHING PRESCALER ASSIGNMENT

The prescaler assignment is fully under software control, i.e., it can be changed “on the fly” during program execution.

Note:	To avoid an unintended device RESET, a specific instruction sequence (shown in the PICmicro™ Mid-Range Reference Manual, DS33023) must be executed when changing the prescaler assignment from Timer0 to the WDT. This sequence must be followed even if the WDT is disabled.

4.3 Timer0 Interrupt

The TMR0 interrupt is generated when the TMR0 register overflows from FFh to 00h. This overflow sets bit T0IF (INTCON<2>). The interrupt can be masked by clearing bit T0IE (INTCON<5>). Bit T0IF must be cleared in software by the Timer0 module interrupt service routine before re-enabling this interrupt. The TMR0 interrupt cannot awaken the processor from SLEEP since the timer is shut off during SLEEP.

FIGURE 4-2: BLOCK DIAGRAM OF THE TIMER0/WDT PRESCALER

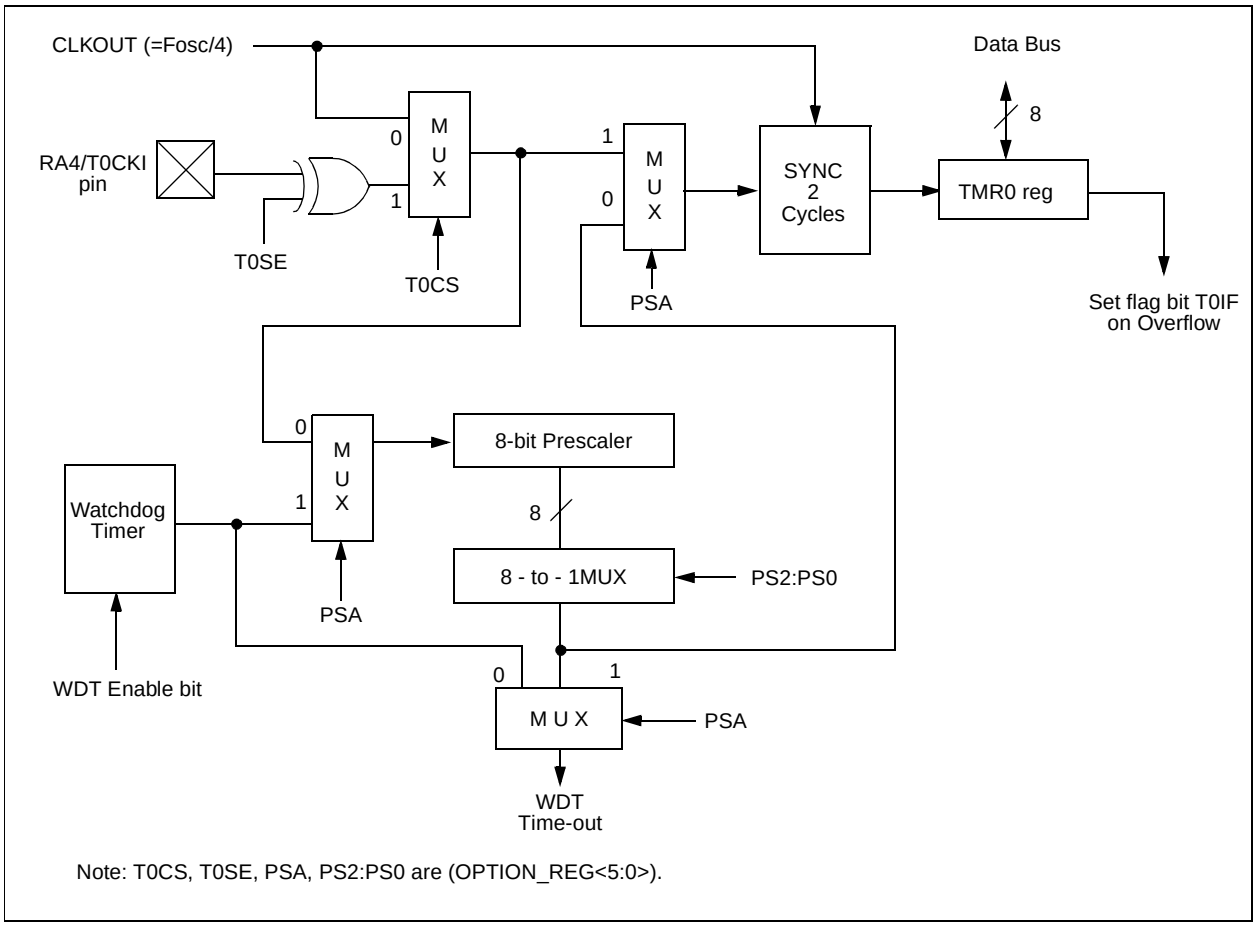

TABLE 4-1 REGISTERS ASSOCIATED WITH TIMER0

Address	Name	Bit 7	Bit 6	Bit 5	Bit 4	Bit 3	Bit 2	Bit 1	Bit 0	Value on: POR, BOR	Value on all other resets
01h,101h	TMR0	Timer0 module’s register								xxxx xxxx	uuuu uuuu
0Bh,8Bh, 10Bh,18Bh	INTCON	GIE	PEIE	T0IE	INTE	RBIE	T0IF	INTF	RBIF	0000 000x	0000 000u
81h,181h	OPTION_REG	$\overline{\text{RBPU}}$	INTEDG	T0CS	T0SE	PSA	PS2	PS1	PS0	1111 1111	1111 1111
85h	TRISA	—	—	PORTA Data Direction Register						--11 1111	--11 1111

Legend: x = unknown, u = unchanged, - = unimplemented locations read as '0'. Shaded cells are not used by Timer0.

 © 1999 Microchip Technology Inc.

5.0 TIMER1 MODULE

The Timer1 module timer/counter has the following features:

- 16-bit timer/counter
  (Two 8-bit registers; TMR1H and TMR1L)
- Readable and writable (Both registers)
- Internal or external clock select
- Interrupt on overflow from FFFFh to 0000h
- Reset from CCP module trigger

Timer1 has a control register, shown in Figure 5-1. Timer1 can be enabled/disabled by setting/clearing control bit TMR1ON (T1CON<0>).

Figure 5-3 is a simplified block diagram of the Timer1 module.

Additional information on timer modules is available in the PICmicro™ Mid-Range Reference Manual, (DS33023).

5.1 Timer1 Operation

Timer1 can operate in one of these modes:

- As a timer
- As a synchronous counter
- As an asynchronous counter

The operating mode is determined by the clock select bit, TMR1CS (T1CON<1>).

In timer mode, Timer1 increments every instruction cycle. In counter mode, it increments on every rising edge of the external clock input.

When the Timer1 oscillator is enabled (T1OSCEN is set), the RC1/T1OSI and RC0/T1OSO/T1CKI pins become inputs. That is, the TRISC<1:0> value is ignored.

Timer1 also has an internal “reset input”. This reset can be generated by the CCP module (Section 7.0).

FIGURE 5-1: T1CON: TIMER1 CONTROL REGISTER (ADDRESS 10h)

U-0	U-0	R/W-0	R/W-0	R/W-0	R/W-0	R/W-0	R/W-0
—	—	T1CKPS1	T1CKPS0	T1OSCEN	$\overline{\text{T1SYNC}}$	$\overline{\text{TMR1CS}}$	$\overline{\text{TMR1ON}}$
bit7							bit0

R = Readable bit
W = Writable bit
U = Unimplemented bit, read as ‘0’
- n = Value at POR reset

bit 7-6: **Unimplemented:** Read as ’0’

bit 5-4: **T1CKPS1:T1CKPS0**: Timer1 Input Clock Prescale Select bits
`11` = 1:8 Prescale value
`10` = 1:4 Prescale value
`01` = 1:2 Prescale value
`00` = 1:1 Prescale value

bit 3: **T1OSCEN**: Timer1 Oscillator Enable Control bit
1 = Oscillator is enabled
0 = Oscillator is shut off
Note: The oscillator inverter and feedback resistor are turned off to eliminate power drain

bit 2: **$\overline{\text{T1SYNC}}$**: Timer1 External Clock Input Synchronization Control bit

TMR1CS = 1
1 = Do not synchronize external clock input
0 = Synchronize external clock input

TMR1CS = 0
This bit is ignored. Timer1 uses the internal clock when TMR1CS = 0.

bit 1: **TMR1CS**: Timer1 Clock Source Select bit
1 = External clock from pin RC0/T1OSO/T1CKI (on the rising edge)
0 = Internal clock (FOSC/4)

bit 0: **TMR1ON**: Timer1 On bit
1 = Enables Timer1
0 = Stops Timer1

5.1.1 TIMER1 COUNTER OPERATION

In this mode, Timer1 is being incremented via an external source. Increments occur on a rising edge. After Timer1 is enabled in counter mode, the module must first have a falling edge before the counter begins to increment.

FIGURE 5-2: TIMER1 INCREMENTING EDGE

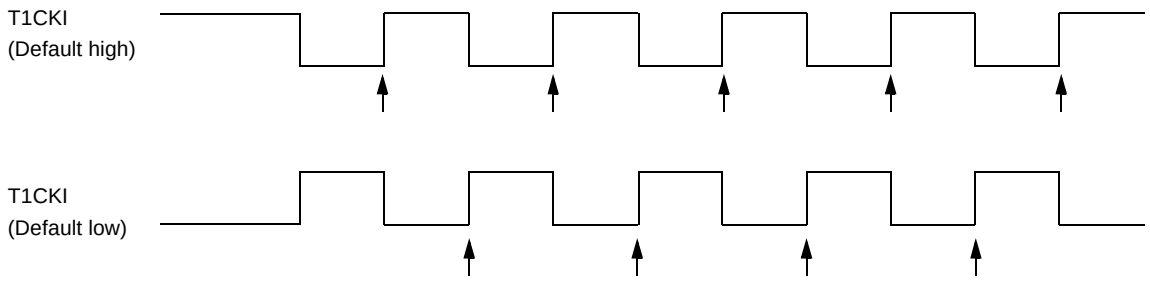

Note: Arrows indicate counter increments.

FIGURE 5-3: TIMER1 BLOCK DIAGRAM

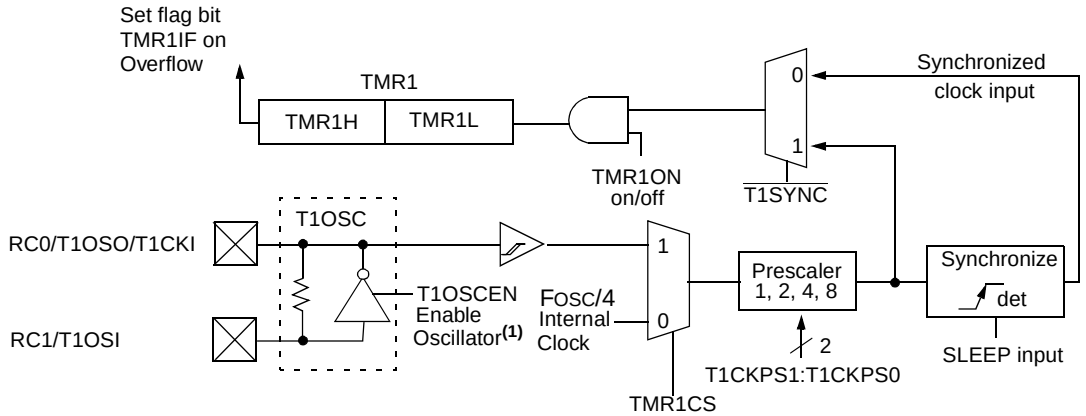

Note 1: When the T1OSCEN bit is cleared, the inverter and feedback resistor are turned off. This eliminates power drain.

 © 1999 Microchip Technology Inc.

5.2 Timer1 Oscillator

A crystal oscillator circuit is built in between pins T1OSI (input) and T1OSO (amplifier output). It is enabled by setting control bit T1OSCEN (T1CON<3>). The oscillator is a low power oscillator rated up to 200 kHz. It will continue to run during SLEEP. It is primarily intended for a 32 kHz crystal. Table 5-1 shows the capacitor selection for the Timer1 oscillator.

The Timer1 oscillator is identical to the LP oscillator. The user must provide a software time delay to ensure proper oscillator start-up.

TABLE 5-1 CAPACITOR SELECTION FOR THE TIMER1 OSCILLATOR

Osc Type	Freq	C1	C2
LP	32 kHz	33 pF	33 pF
	100 kHz	15 pF	15 pF
	200 kHz	15 pF	15 pF
These values are for design guidance only.			
Crystals Tested:			
32.768 kHz	Epson C-001R32.768K-A	± 20 PPM	
100 kHz	Epson C-2 100.00 KC-P	± 20 PPM	
200 kHz	STD XTL 200.000 kHz	± 20 PPM	

Note 1: Higher capacitance increases the stability of oscillator but also increases the start-up time.
2: Since each resonator/crystal has its own characteristics, the user should consult the resonator/crystal manufacturer for appropriate values of external components.

5.3 Timer1 Interrupt

The TMR1 Register pair (TMR1H:TMR1L) increments from 0000h to FFFFh and rolls over to 0000h. The TMR1 Interrupt, if enabled, is generated on overflow which is latched in interrupt flag bit TMR1IF (PIR1<0>). This interrupt can be enabled/disabled by setting/clearing TMR1 interrupt enable bit TMR1IE (PIE1<0>).

5.4 Resetting Timer1 using a CCP Trigger Output

If the CCP module is configured in compare mode to generate a “special event trigger" (CCP1M3:CCP1M0 = `1011`), this signal will reset Timer1 and start an A/D conversion (if the A/D module is enabled).

> **Note:** The special event triggers from the CCP1 module will not set interrupt flag bit TMR1IF (PIR1<0>).

Timer1 must be configured for either timer or synchronized counter mode to take advantage of this feature. If Timer1 is running in asynchronous counter mode, this reset operation may not work.

In the event that a write to Timer1 coincides with a special event trigger from CCP1, the write will take precedence.

In this mode of operation, the CCPR1H:CCPR1L registers pair effectively becomes the period register for Timer1.

TABLE 5-2 REGISTERS ASSOCIATED WITH TIMER1 AS A TIMER/COUNTER

Address	Name	Bit 7	Bit 6	Bit 5	Bit 4	Bit 3	Bit 2	Bit 1	Bit 0	Value on: POR, BOR	Value on all other resets
0Bh,8Bh, 10Bh,18Bh	INTCON	GIE	PEIE	T0IE	INTE	RBIE	T0IF	INTF	RBIF	`0000 000x`	`0000 000u`
0Ch	PIR1	PSPIF(1)	ADIF	RCIF	TXIF	SSPIF	CCP1IF	TMR2IF	TMR1IF	`0000 0000`	`0000 0000`
8Ch	PIE1	PSPIE(1)	ADIE	RCIE	TXIE	SSPIE	CCP1IE	TMR2IE	TMR1IE	`0000 0000`	`0000 0000`
0Eh	TMR1L	Holding register for the Least Significant Byte of the 16-bit TMR1 register								`xxxx xxxx`	`uuuu uuuu`
0Fh	TMR1H	Holding register for the Most Significant Byte of the 16-bit TMR1 register								`xxxx xxxx`	`uuuu uuuu`
10h	T1CON	—	—	T1CKPS1	T1CKPS0	T1OSCEN	$\overline{\text{T1SYNC}}$	TMR1CS	TMR1ON	`--00 0000`	`--uu uuuu`

Legend: x = unknown, u = unchanged, - = unimplemented read as '0'. Shaded cells are not used by the Timer1 module.
Note 1: These bits are reserved on the 28-pin devices, always maintain these bits clear.

NOTES:

 © 1999 Microchip Technology Inc.

6.0 TIMER2 MODULE

The Timer2 module timer has the following features:

- 8-bit timer (TMR2 register)
- 8-bit period register (PR2)
- Readable and writable (Both registers)
- Software programmable prescaler (1:1, 1:4, 1:16)
- Software programmable postscaler (1:1 to 1:16)
- Interrupt on TMR2 match of PR2
- SSP module optional use of TMR2 output to generate clock shift

Timer2 has a control register, shown in Figure 6-1. Timer2 can be shut off by clearing control bit TMR2ON (T2CON<2>) to minimize power consumption.

Figure 6-2 is a simplified block diagram of the Timer2 module.

Additional information on timer modules is available in the PICmicro™ Mid-Range Reference Manual, (DS33023).

6.1 Timer2 Operation

Timer2 can be used as the PWM time-base for PWM mode of the CCP module.

The TMR2 register is readable and writable, and is cleared on any device reset.

The input clock (Fosc/4) has a prescale option of 1:1, 1:4 or 1:16, selected by control bits T2CKPS1:T2CKPS0 (T2CON<1:0>).

The match output of TMR2 goes through a 4-bit postscaler (which gives a 1:1 to 1:16 scaling inclusive) to generate a TMR2 interrupt (latched in flag bit TMR2IF, (PIR1<1>)).

The prescaler and postscaler counters are cleared when any of the following occurs:

- a write to the TMR2 register
- a write to the T2CON register
- any device reset (Power-on Reset, $\overline{\text{MCLR}}$ reset, Watchdog Timer reset, or Brown-out Reset)

TMR2 is not cleared when T2CON is written.

FIGURE 6-1: T2CON: TIMER2 CONTROL REGISTER (ADDRESS 12h)

U-0	R/W-0	R/W-0	R/W-0	R/W-0	R/W-0	R/W-0	R/W-0
—	TOUTPS3	TOUTPS2	TOUTPS1	TOUTPS0	TMR2ON	T2CKPS1	T2CKPS0
bit7							bit0

R = Readable bit
W = Writable bit
U = Unimplemented bit, read as ‘0’
- n = Value at POR reset

bit 7: **Unimplemented:** Read as '0'

bit 6-3: **TOUTPS3:TOUTPS0**: Timer2 Output Postscale Select bits
`0000` = 1:1 Postscale
`0001` = 1:2 Postscale
•
•
•
`1111` = 1:16 Postscale

bit 2: **TMR2ON**: Timer2 On bit
1 = Timer2 is on
0 = Timer2 is off

bit 1-0: **T2CKPS1:T2CKPS0**: Timer2 Clock Prescale Select bits
`00` = Prescaler is 1
`01` = Prescaler is 4
`1x` = Prescaler is 16

6.2 Timer2 Interrupt

The Timer2 module has an 8-bit period register PR2. Timer2 increments from 00h until it matches PR2 and then resets to 00h on the next increment cycle. PR2 is a readable and writable register. The PR2 register is initialized to FFh upon reset.

6.3 Output of TMR2

The output of TMR2 (before the postscaler) is fed to the Synchronous Serial Port module which optionally uses it to generate shift clock.

FIGURE 6-2: TIMER2 BLOCK DIAGRAM

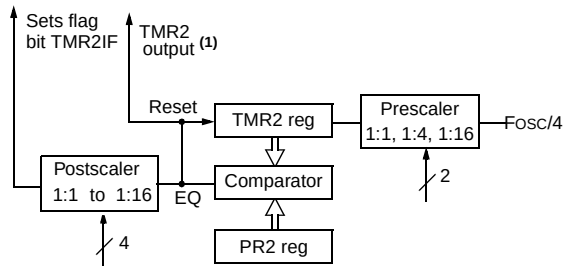

Note 1: TMR2 register output can be software selected by the SSP Module as a baud clock.

TABLE 6-1 REGISTERS ASSOCIATED WITH TIMER2 AS A TIMER/COUNTER

Address	Name	Bit 7	Bit 6	Bit 5	Bit 4	Bit 3	Bit 2	Bit 1	Bit 0	Value on: POR, BOR	Value on all other resets
0Bh,8Bh, 10Bh,18Bh	INTCON	GIE	PEIE	T0IE	INTE	RBIE	T0IF	INTF	RBIF	0000 000x	0000 000u
0Ch	PIR1	PSPIF(1)	ADIF	RCIF	TXIF	SSPIF	CCP1IF	TMR2IF	TMR1IF	0000 0000	0000 0000
8Ch	PIE1	PSPIE(1)	ADIE	RCIE	TXIE	SSPIE	CCP1IE	TMR2IE	TMR1IE	0000 0000	0000 0000
11h	TMR2	Timer2 module's register								0000 0000	0000 0000
12h	T2CON	—	TOUTPS3	TOUTPS2	TOUTPS1	TOUTPS0	TMR2ON	T2CKPS1	T2CKPS0	-000 0000	-000 0000
92h	PR2	Timer2 Period Register								1111 1111	1111 1111

Legend: x = unknown, u = unchanged, - = unimplemented read as '0'. Shaded cells are not used by the Timer2 module.
Note 1: These bits are reserved on the 28-pin, always maintain these bits clear.

 © 1999 Microchip Technology Inc.

7.0 CAPTURE/COMPARE/PWM (CCP) MODULE(S)

Each CCP (Capture/Compare/PWM) module contains a 16-bit register which can operate as a 16-bit capture register, as a 16-bit compare register or as a PWM master/slave Duty Cycle register. Table 7-1 shows the timer resources of the CCP module modes.

The operation of CCP1 is identical to that of CCP2, with the exception of the special trigger. Therefore, operation of a CCP module in the following sections is described with respect to CCP1.

Table 7-2 shows the interaction of the CCP modules.

CCP1 Module

Capture/Compare/PWM Register1 (CCPR1) is comprised of two 8-bit registers: CCPR1L (low byte) and CCPR1H (high byte). The CCP1CON register controls the operation of CCP1. All are readable and writable.

CCP2 Module

Capture/Compare/PWM Register2 (CCPR2) is comprised of two 8-bit registers: CCPR2L (low byte) and CCPR2H (high byte). The CCP2CON register controls the operation of CCP2. All are readable and writable.

Additional information on the CCP module is available in the PICmicro™ Mid-Range Reference Manual, (DS33023).

TABLE 7-1 CCP MODE - TIMER RESOURCE

CCP Mode	Timer Resource
Capture	Timer1
Compare	Timer1
PWM	Timer2

TABLE 7-2 INTERACTION OF TWO CCP MODULES

CCPx Mode	CCPy Mode	Interaction
Capture	Capture	Same TMR1 time-base.
Capture	Compare	The compare should be configured for the special event trigger, which clears TMR1.
Compare	Compare	The compare(s) should be configured for the special event trigger, which clears TMR1.
PWM	PWM	The PWMs will have the same frequency, and update rate (TMR2 interrupt).
PWM	Capture	None
PWM	Compare	None

FIGURE 7-1: CCP1CON REGISTER (ADDRESS 17h) / CCP2CON REGISTER (ADDRESS 1Dh)

U-0	U-0	R/W-0	R/W-0	R/W-0	R/W-0	R/W-0	R/W-0
—	—	CCPxX	CCPxY	CCPxM3	CCPxM2	$\overline{\text{CCPxM1}}$	$\overline{\text{CCPxM0}}$
bit7							bit0

R = Readable bit
W = Writable bit
U = Unimplemented bit, read as ‘0’
- n =Value at POR reset

bit 7-6: **Unimplemented:** Read as '0'

bit 5-4: **CCPxX:CCPxY**: PWM Least Significant bits
Capture Mode: Unused
Compare Mode: Unused
PWM Mode: These bits are the two LSbs of the PWM duty cycle. The eight MSbs are found in CCPRxL.

bit 3-0: **CCPxM3:CCPxM0**: CCPx Mode Select bits
`0000` = Capture/Compare/PWM off (resets CCPx module)
`0100` = Capture mode, every falling edge
`0101` = Capture mode, every rising edge
`0110` = Capture mode, every 4th rising edge
`0111` = Capture mode, every 16th rising edge
`1000` = Compare mode, set output on match (CCPxIF bit is set)
`1001` = Compare mode, clear output on match (CCPxIF bit is set)
`1010` = Compare mode, generate software interrupt on match (CCPxIF bit is set, CCPx pin is unaffected)
`1011` = Compare mode, trigger special event (CCPxIF bit is set; CCP1 resets TMR1; CCP2 resets TMR1 and starts an A/D conversion (if A/D module is enabled))
`11xx` = PWM mode

7.1 Capture Mode

In Capture mode, CCPR1H:CCPR1L captures the 16-bit value of the TMR1 register when an event occurs on pin RC2/CCP1. An event is defined as:

- every falling edge
- every rising edge
- every 4th rising edge
- every 16th rising edge

An event is selected by control bits CCP1M3:CCP1M0 (CCP1CON<3:0>). When a capture is made, the interrupt request flag bit CCP1IF (PIR1<2>) is set. It must be cleared in software. If another capture occurs before the value in register CCPR1 is read, the old captured value will be lost.

7.1.1 CCP PIN CONFIGURATION

In Capture mode, the RC2/CCP1 pin should be configured as an input by setting the TRISC<2> bit.

Note:	If the RC2/CCP1 is configured as an output, a write to the port can cause a capture condition.

FIGURE 7-2: CAPTURE MODE OPERATION BLOCK DIAGRAM

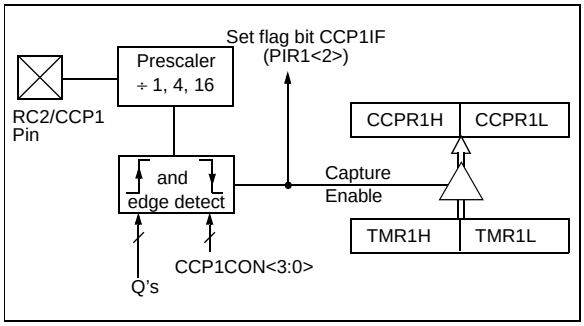

7.1.2 TIMER1 MODE SELECTION

Timer1 must be running in timer mode or synchronized counter mode for the CCP module to use the capture feature. In asynchronous counter mode, the capture operation may not work.

7.1.3 SOFTWARE INTERRUPT

When the Capture mode is changed, a false capture interrupt may be generated. The user should keep bit CCP1IE (PIE1<2>) clear to avoid false interrupts and should clear the flag bit CCP1IF following any such change in operating mode.

7.1.4 CCP PRESCALER

There are four prescaler settings, specified by bits CCP1M3:CCP1M0. Whenever the CCP module is turned off, or the CCP module is not in capture mode, the prescaler counter is cleared. This means that any reset will clear the prescaler counter.

Switching from one capture prescaler to another may generate an interrupt. Also, the prescaler counter will not be cleared, therefore the first capture may be from a non-zero prescaler. Example 7-1 shows the recommended method for switching between capture prescalers. This example also clears the prescaler counter and will not generate the “false” interrupt.

EXAMPLE 7-1: CHANGING BETWEEN CAPTURE PRESCALERS

```
CLRF    CCP1CON       ;Turn CCP module off
MOVLW   NEW_CAPT_PS   ;Load the W reg with
                      ; the new prescaler
                      ; mode value and CCP ON
MOVWF   CCP1CON       ;Load CCP1CON with this
                      ; value
```

 © 1999 Microchip Technology Inc.

7.2 Compare Mode

In Compare mode, the 16-bit CCPR1 register value is constantly compared against the TMR1 register pair value. When a match occurs, the RC2/CCP1 pin is:

- driven High
- driven Low
- remains Unchanged

The action on the pin is based on the value of control bits CCP1M3:CCP1M0 (CCP1CON<3:0>). At the same time, interrupt flag bit CCP1IF is set.

FIGURE 7-3: COMPARE MODE OPERATION BLOCK DIAGRAM

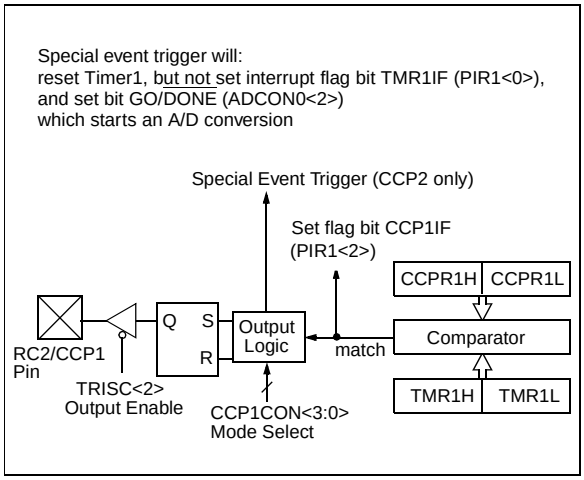

7.2.1 CCP PIN CONFIGURATION

The user must configure the RC2/CCP1 pin as an output by clearing the TRISC<2> bit.

> **Note:** Clearing the CCP1CON register will force the RC2/CCP1 compare output latch to the default low level. This is not the data latch.

7.2.2 TIMER1 MODE SELECTION

Timer1 must be running in Timer mode or Synchronized Counter mode if the CCP module is using the compare feature. In Asynchronous Counter mode, the compare operation may not work.

7.2.3 SOFTWARE INTERRUPT MODE

When generate software interrupt is chosen the CCP1 pin is not affected. Only a CCP interrupt is generated (if enabled).

7.2.4 SPECIAL EVENT TRIGGER

In this mode, an internal hardware trigger is generated which may be used to initiate an action.

The special event trigger output of CCP1 resets the TMR1 register pair. This allows the CCPR1 register to effectively be a 16-bit programmable period register for Timer1.

The special trigger output of CCP2 resets the TMR1 register pair, and starts an A/D conversion (if the A/D module is enabled).

> **Note:** The special event trigger from the CCP2 module will not set interrupt flag bit TMR1IF (PIR1<0>).

TABLE 7-3 REGISTERS ASSOCIATED WITH CAPTURE, COMPARE, AND TIMER1

Address	Name	Bit 7	Bit 6	Bit 5	Bit 4	Bit 3	Bit 2	Bit 1	Bit 0	Value on: POR, BOR	Value on all other resets
0Bh,8Bh, 10Bh,18Bh	INTCON	GIE	PEIE	T0IE	INTE	RBIE	T0IF	INTF	RBIF	0000 000x	0000 000u
0Ch	PIR1	PSPIF(1)	ADIF	RCIF	TXIF	SSPIF	CCP1IF	TMR2IF	TMR1IF	0000 0000	0000 0000
8Ch	PIE1	PSPIE(1)	ADIE	RCIE	TXIE	SSPIE	CCP1IE	TMR2IE	TMR1IE	0000 0000	0000 0000
87h	TRISC	PORTC Data Direction Register								1111 1111	1111 1111
0Eh	TMR1L	Holding register for the Least Significant Byte of the 16-bit TMR1 register								xxxx xxxx	uuuu uuuu
0Fh	TMR1H	Holding register for the Most Significant Byte of the 16-bit TMR1register								xxxx xxxx	uuuu uuuu
10h	T1CON	—	—	T1CKPS1	T1CKPS0	T1OSCEN	$\overline{\text{T1SYNC}}$	TMR1CS	TMR1ON	--00 0000	--uu uuuu
15h	CCPR1L	Capture/Compare/PWM register1 (LSB)								xxxx xxxx	uuuu uuuu
16h	CCPR1H	Capture/Compare/PWM register1 (MSB)								xxxx xxxx	uuuu uuuu
17h	CCP1CON	—	—	CCP1X	CCP1Y	CCP1M3	CCP1M2	CCP1M1	CCP1M0	--00 0000	--00 0000

Legend: x = unknown, u = unchanged, - = unimplemented read as '0'. Shaded cells are not used by Capture and Timer1.
Note 1: Bits PSPIE and PSPIF are reserved on the 28-pin, always maintain these bits clear.

7.3 PWM Mode

In Pulse Width Modulation (PWM) mode, the CCP1 pin produces up to a 10-bit resolution PWM output. Since the CCP1 pin is multiplexed with the PORTC data latch, the TRISC<2> bit must be cleared to make the CCP1 pin an output.

Note:	Clearing the CCP1CON register will force the CCP1 PWM output latch to the default low level. This is not the PORTC I/O data latch.

Figure 7-4 shows a simplified block diagram of the CCP module in PWM mode.

For a step by step procedure on how to set up the CCP module for PWM operation, see Section 7.3.3.

FIGURE 7-4: SIMPLIFIED PWM BLOCK DIAGRAM

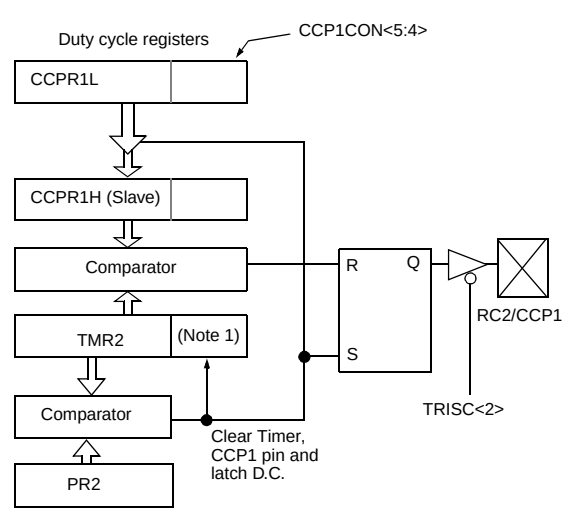

Note 1: 8-bit timer is concatenated with 2-bit internal Q clock or 2 bits of the prescaler to create 10-bit time-base.

A PWM output (Figure 7-5) has a time base (period) and a time that the output stays high (duty cycle). The frequency of the PWM is the inverse of the period (1/period).

FIGURE 7-5: PWM OUTPUT

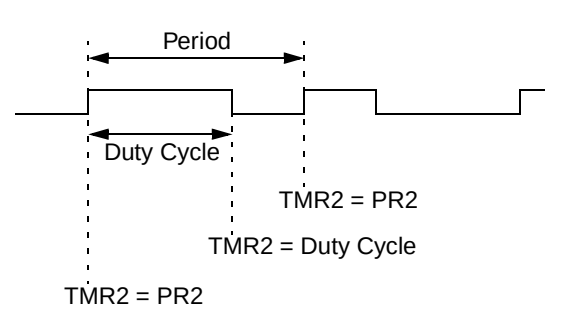

7.3.1 PWM PERIOD

The PWM period is specified by writing to the PR2 register. The PWM period can be calculated using the following formula:

$$\text{PWM period} = [(PR2) + 1] \cdot 4 \cdot T_{OSC} \cdot (\text{TMR2 prescale value})$$

PWM frequency is defined as 1 / [PWM period].

When TMR2 is equal to PR2, the following three events occur on the next increment cycle:

- TMR2 is cleared
- The CCP1 pin is set (exception: if PWM duty cycle = 0%, the CCP1 pin will not be set)
- The PWM duty cycle is latched from CCPR1L into CCPR1H

Note:	The Timer2 postscaler (see Section 6.0) is not used in the determination of the PWM frequency. The postscaler could be used to have a servo update rate at a different frequency than the PWM output.

7.3.2 PWM DUTY CYCLE

The PWM duty cycle is specified by writing to the CCPR1L register and to the CCP1CON<5:4> bits. Up to 10-bit resolution is available: the CCPR1L contains the eight MSbs and the CCP1CON<5:4> contains the two LSbs. This 10-bit value is represented by CCPR1L:CCP1CON<5:4>. The following equation is used to calculate the PWM duty cycle in time:

$$\text{PWM duty cycle} = (CCPR1L{:}CCP1CON\langle 5{:}4\rangle) \cdot Tosc \cdot (\text{TMR2 prescale value})$$

CCPR1L and CCP1CON<5:4> can be written to at any time, but the duty cycle value is not latched into CCPR1H until after a match between PR2 and TMR2 occurs (i.e., the period is complete). In PWM mode, CCPR1H is a read-only register.

The CCPR1H register and a 2-bit internal latch are used to double buffer the PWM duty cycle. This double buffering is essential for glitchless PWM operation.

When the CCPR1H and 2-bit latch match TMR2 concatenated with an internal 2-bit Q clock or 2 bits of the TMR2 prescaler, the CCP1 pin is cleared.

Maximum PWM resolution (bits) for a given PWM frequency:

$$= \frac{\log\left(\frac{F_{OSC}}{F_{PWM}}\right)}{\log(2)} \text{ bits}$$

Note:	If the PWM duty cycle value is longer than the PWM period the CCP1 pin will not be cleared.

For an example PWM period and duty cycle calculation, see the PICmicro™ Mid-Range Reference Manual, (DS33023).

 © 1999 Microchip Technology Inc.

7.3.3 SET-UP FOR PWM OPERATION

The following steps should be taken when configuring the CCP module for PWM operation:

1. Set the PWM period by writing to the PR2 register.
2. Set the PWM duty cycle by writing to the CCPR1L register and CCP1CON<5:4> bits.
3. Make the CCP1 pin an output by clearing the TRISC<2> bit.
4. Set the TMR2 prescale value and enable Timer2 by writing to T2CON.
5. Configure the CCP1 module for PWM operation.

TABLE 7-4 EXAMPLE PWM FREQUENCIES AND RESOLUTIONS AT 20 MHz

PWM Frequency	1.22 kHz	4.88 kHz	19.53 kHz	78.12 kHz	156.3 kHz	208.3 kHz
Timer Prescaler (1, 4, 16)	16	4	1	1	1	1
PR2 Value	0xFF	0xFF	0xFF	0x3F	0x1F	0x17
Maximum Resolution (bits)	10	10	10	8	7	5.5

TABLE 7-5 REGISTERS ASSOCIATED WITH PWM AND TIMER2

Address	Name	Bit 7	Bit 6	Bit 5	Bit 4	Bit 3	Bit 2	Bit 1	Bit 0	Value on: POR, BOR	Value on all other resets
0Bh,8Bh, 10Bh,18Bh	INTCON	GIE	PEIE	T0IE	INTE	RBIE	T0IF	INTF	RBIF	0000 000x	0000 000u
0Ch	PIR1	PSPIF(1)	ADIF	RCIF	TXIF	SSPIF	CCP1IF	TMR2IF	TMR1IF	0000 0000	0000 0000
8Ch	PIE1	PSPIE(1)	ADIE	RCIE	TXIE	SSPIE	CCP1IE	TMR2IE	TMR1IE	0000 0000	0000 0000
87h	TRISC	PORTC Data Direction Register								1111 1111	1111 1111
11h	TMR2	Timer2 module's register								0000 0000	0000 0000
92h	PR2	Timer2 module's period register								1111 1111	1111 1111
12h	T2CON	—	TOUTPS3	TOUTPS2	TOUTPS1	TOUTPS0	TMR2ON	T2CKPS1	T2CKPS0	-000 0000	-000 0000
15h	CCPR1L	Capture/Compare/PWM register1 (LSB)								xxxx xxxx	uuuu uuuu
16h	CCPR1H	Capture/Compare/PWM register1 (MSB)								xxxx xxxx	uuuu uuuu
17h	CCP1CON	—	—	CCP1X	CCP1Y	CCP1M3	CCP1M2	CCP1M1	CCP1M0	--00 0000	--00 0000

Legend: x = unknown, u = unchanged, - = unimplemented read as '0'. Shaded cells are not used by PWM and Timer2.
Note 1: Bits PSPIE and PSPIF are reserved on the 28-pin, always maintain these bits clear.

NOTES:

 © 1999 Microchip Technology Inc.

8.0 MASTER SYNCHRONOUS SERIAL PORT (MSSP) MODULE

The Master Synchronous Serial Port (MSSP) module is a serial interface useful for communicating with other peripheral or microcontroller devices. These peripheral devices may be serial EEPROMs, shift registers, display drivers, A/D converters, etc. The MSSP module can operate in one of two modes:

- Serial Peripheral Interface (SPI)
- Inter-Integrated Circuit (I^2C™)

FIGURE 8-1: SSPSTAT: SYNC SERIAL PORT STATUS REGISTER (ADDRESS: 94h)

R/W-0	R/W-0	R-0	R-0	R-0	R-0	R-0	R-0
SMP	CKE	D/$\overline{A}$	P	S	R/$\overline{W}$	UA	BF
bit7							bit0

R =Readable bit
W =Writable bit
U =Unimplemented bit, read as '0'
- n =Value at POR reset

bit 7: **SMP:** Sample bit
SPI Master Mode
1 = Input data sampled at end of data output time
0 = Input data sampled at middle of data output time
SPI Slave Mode
SMP must be cleared when SPI is used in slave mode
In I^2C master or slave mode:
1= Slew rate control disabled for standard speed mode (100 kHz and 1 MHz)
0= Slew rate control enabled for high speed mode (400 kHz)

bit 6: **CKE**: SPI Clock Edge Select (Figure 8-6, Figure 8-8, and Figure 8-9)
CKP = 0
1 = Data transmitted on rising edge of SCK
0 = Data transmitted on falling edge of SCK
CKP = 1
1 = Data transmitted on falling edge of SCK
0 = Data transmitted on rising edge of SCK

bit 5: **D/A**: Data/$\overline{\text{Address}}$ bit (I^2C mode only)
1 = Indicates that the last byte received or transmitted was data
0 = Indicates that the last byte received or transmitted was address

bit 4: **P**: Stop bit
(I^2C mode only. This bit is cleared when the MSSP module is disabled, SSPEN is cleared)
1 = Indicates that a stop bit has been detected last (this bit is '0' on RESET)
0 = Stop bit was not detected last

bit 3: **S**: Start bit
(I^2C mode only. This bit is cleared when the MSSP module is disabled, SSPEN is cleared)
1 = Indicates that a start bit has been detected last (this bit is '0' on RESET)
0 = Start bit was not detected last

bit 2: **R/W**: Read/Write bit information (I^2C mode only)
This bit holds the R/W bit information following the last address match. This bit is only valid from the address match to the next start bit, stop bit, or not $\overline{\text{ACK}}$ bit.
In I^2C slave mode:
1 = Read
0 = Write
In I^2C master mode:
1 = Transmit is in progress
0 = Transmit is not in progress.
Or'ing this bit with SEN, RSEN, PEN, RCEN, or AKEN will indicate if the MSSP is in IDLE mode

bit 1: **UA**: Update Address (10-bit I^2C mode only)
1 = Indicates that the user needs to update the address in the SSPADD register
0 = Address does not need to be updated

bit 0: **BF**: Buffer Full Status bit
Receive (SPI and I^2C modes)
1 = Receive complete, SSPBUF is full
0 = Receive not complete, SSPBUF is empty
Transmit (I^2C mode only)
1 = Data Transmit in progress (does not include the $\overline{\text{ACK}}$ and stop bits), SSPBUF is full
0 = Data Transmit complete (does not include the $\overline{\text{ACK}}$ and stop bits), SSPBUF is empty

 © 1999 Microchip Technology Inc.

FIGURE 8-2: SSPCON: SYNC SERIAL PORT CONTROL REGISTER (ADDRESS 14h)

R/W-0	R/W-0	R/W-0	R/W-0	R/W-0	R/W-0	R/W-0	R/W-0
WCOL	SSPOV	SSPEN	CKP	SSPM3	SSPM2	SSPM1	SSPM0
bit7							bit0

R = Readable bit
W = Writable bit
- n = Value at POR reset

bit 7: **WCOL**: Write Collision Detect bit
Master Mode:
1 = A write to the SSPBUF register was attempted while the I^2C conditions were not valid for a transmission to be started
0 = No collision
Slave Mode:
1 = The SSPBUF register is written while it is still transmitting the previous word (must be cleared in software)
0 = No collision

bit 6: **SSPOV**: Receive Overflow Indicator bit
In SPI mode
1 = A new byte is received while the SSPBUF register is still holding the previous data. In case of overflow, the data in SSPSR is lost. Overflow can only occur in slave mode. In slave mode, the user must read the SSPBUF, even if only transmitting data, to avoid setting overflow. In master mode, the overflow bit is not set since each new reception (and transmission) is initiated by writing to the SSPBUF register. (Must be cleared in software).
0 = No overflow
In I^2C mode
1 = A byte is received while the SSPBUF register is still holding the previous byte. SSPOV is a "don't care" in transmit mode. (Must be cleared in software).
0 = No overflow

bit 5: **SSPEN**: Synchronous Serial Port Enable bit
In both modes, when enabled, these pins must be properly configured as input or output.
In SPI mode
1 = Enables serial port and configures SCK, SDO, SDI, and $\overline{SS}$ as the source of the serial port pins
0 = Disables serial port and configures these pins as I/O port pins
In I^2C mode
1 = Enables the serial port and configures the SDA and SCL pins as the source of the serial port pins
0 = Disables serial port and configures these pins as I/O port pins

bit 4: **CKP**: Clock Polarity Select bit
In SPI mode
1 = Idle state for clock is a high level
0 = Idle state for clock is a low level
In I^2C slave mode
SCK release control
1 = Enable clock
0 = Holds clock low (clock stretch) (Used to ensure data setup time)
In I^2C master mode
Unused in this mode

bit 3-0: **SSPM3:SSPM0**: Synchronous Serial Port Mode Select bits
`0000` = SPI master mode, clock = FOSC/4
`0001` = SPI master mode, clock = FOSC/16
`0010` = SPI master mode, clock = FOSC/64
`0011` = SPI master mode, clock = TMR2 output/2
`0100` = SPI slave mode, clock = SCK pin. $\overline{SS}$ pin control enabled.
`0101` = SPI slave mode, clock = SCK pin. $\overline{SS}$ pin control disabled. $\overline{SS}$ can be used as I/O pin
`0110` = I^2C slave mode, 7-bit address
`0111` = I^2C slave mode, 10-bit address
`1000` = I^2C master mode, clock = FOSC / (4 * (SSPADD+1))
`1xx1` = Reserved
`1x1x` = Reserved

FIGURE 8-3: SSPCON2: SYNC SERIAL PORT CONTROL REGISTER2 (ADDRESS 91h)

R/W-0	R/W-0	R/W-0	R/W-0	R/W-0	R/W-0	R/W-0	R/W-0
GCEN	AKSTAT	AKDT	AKEN	RCEN	PEN	RSEN	SEN
bit7							bit0

R =Readable bit
W =Writable bit
U =Unimplemented bit, Read as '0'
- n =Value at POR reset

bit 7: **GCEN**: General Call Enable bit (In I^2C slave mode only)
1 = Enable interrupt when a general call address (0000h) is received in the SSPSR.
0 = General call address disabled.

bit 6: **AKSTAT**: Acknowledge Status bit (In I^2C master mode only)
In master transmit mode:
1 = Acknowledge was not received from slave
0 = Acknowledge was received from slave

bit 5: **AKDT**: Acknowledge Data bit (In I^2C master mode only)
In master receive mode:
Value that will be transmitted when the user initiates an Acknowledge sequence at the end of a receive.
1 = Not Acknowledge
0 = Acknowledge

bit 4: **AKEN**: Acknowledge Sequence Enable bit (In I^2C master mode only).
In master receive mode:
1 = Initiate Acknowledge sequence on SDA and SCL pins, and transmit AKDT data bit. Automatically cleared by hardware.
0 = Acknowledge sequence idle

bit 3: **RCEN**: Receive Enable bit (In I^2C master mode only).
1 = Enables Receive mode for I^2C
0 = Receive idle

bit 2: **PEN**: Stop Condition Enable bit (In I^2C master mode only).
SCK release control
1 = Initiate Stop condition on SDA and SCL pins. Automatically cleared by hardware.
0 = Stop condition idle

bit 1: **RSEN**: Repeated Start Condition Enabled bit (In I^2C master mode only)
1 = Initiate Repeated Start condition on SDA and SCL pins. Automatically cleared by hardware.
0 = Repeated Start condition idle.

bit 0: **SEN**: Start Condition Enabled bit (In I^2C master mode only)
1 = Initiate Start condition on SDA and SCL pins. Automatically cleared by hardware.
0 = Start condition idle.

Note: For bits AKEN, RCEN, PEN, RSEN, SEN: If the I^2C module is not in the idle mode, this bit may not be set (no spooling), and the SSPBUF may not be written (or writes to the SSPBUF are disabled).

 © 1999 Microchip Technology Inc.

8.1 SPI Mode

The SPI mode allows 8-bits of data to be synchronously transmitted and received simultaneously. All four modes of SPI are supported. To accomplish communication, typically three pins are used:

- Serial Data Out (SDO)
- Serial Data In (SDI)
- Serial Clock (SCK)

Additionally, a fourth pin may be used when in a slave mode of operation:

- Slave Select ($\overline{SS}$)

8.1.1 OPERATION

When initializing the SPI, several options need to be specified. This is done by programming the appropriate control bits (SSPCON<5:0> and SSPSTAT<7:6>). These control bits allow the following to be specified:

- Master Mode (SCK is the clock output)
- Slave Mode (SCK is the clock input)
- Clock Polarity (Idle state of SCK)
- Data input sample phase
  (middle or end of data output time)
- Clock edge
  (output data on rising/falling edge of SCK)
- Clock Rate (Master mode only)
- Slave Select Mode (Slave mode only)

Figure 8-4 shows the block diagram of the MSSP module when in SPI mode.

FIGURE 8-4: MSSP BLOCK DIAGRAM (SPI MODE)

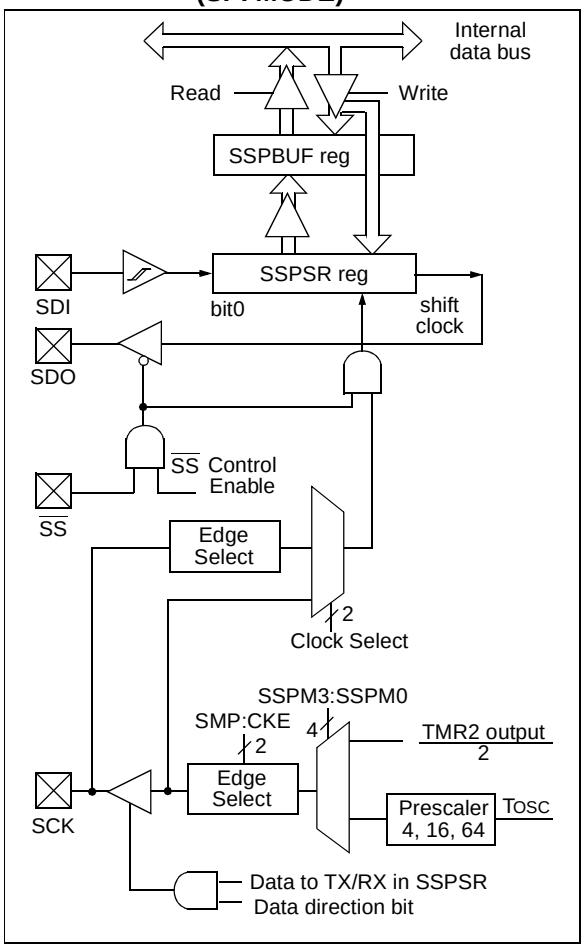

The MSSP consists of a transmit/receive Shift Register (SSPSR) and a buffer register (SSPBUF). The SSPSR shifts the data in and out of the device, MSb first. The SSPBUF holds the data that was written to the SSPSR, until the received data is ready. Once the 8-bits of data have been received, that byte is moved to the SSPBUF register. Then the buffer full detect bit BF (SSPSTAT<0>) and the interrupt flag bit SSPIF (PIR1<3>) are set. This double buffering of the received data (SSPBUF) allows the next byte to start reception before reading the data that was just received. Any write to the SSPBUF register during transmission/reception of data will be ignored, and the write collision detect bit WCOL (SSPCON<7>) will be set. User software must clear the WCOL bit so that it can be determined if the following write(s) to the SSPBUF register completed successfully.

When the application software is expecting to receive valid data, the SSPBUF should be read before the next byte of data to transfer is written to the SSPBUF. Buffer full bit, BF (SSPSTAT<0>), indicates when the SSPBUF has been loaded with the received data (transmission is complete). When the SSPBUF is read, bit BF is cleared. This data may be irrelevant if the SPI is only a transmitter. Generally the MSSP Interrupt is used to

determine when the transmission/reception has completed. The SSPBUF must be read and/or written. If the interrupt method is not going to be used, then software polling can be done to ensure that a write collision does not occur. Example 8-1 shows the loading of the SSPBUF (SSPSR) for data transmission.

EXAMPLE 8-1: LOADING THE SSPBUF (SSPSR) REGISTER

```
     BSF   STATUS, RP0    ;Specify Bank 1
LOOP BTFSS SSPSTAT, BF    ;Has data been
                          ;received
                          ;(transmit
                          ;complete)?
     GOTO  LOOP           ;No
     BCF   STATUS, RP0    ;Specify Bank 0
     MOVF  SSPBUF, W      ;W reg = contents
                          ;of SSPBUF
     MOVWF RXDATA         ;Save in user RAM
     MOVF  TXDATA, W      ;W reg = contents
                          ; of TXDATA
     MOVWF SSPBUF         ;New data to xmit
```

The SSPSR is not directly readable or writable, and can only be accessed by addressing the SSPBUF register. Additionally, the MSSP status register (SSPSTAT) indicates the various status conditions.

8.1.2 ENABLING SPI I/O

To enable the serial port, MSSP Enable bit, SSPEN (SSPCON<5>) must be set. To reset or reconfigure SPI mode, clear bit SSPEN, re-initialize the SSPCON registers, and then set bit SSPEN. This configures the SDI, SDO, SCK, and $\overline{SS}$ pins as serial port pins. For the pins to behave as the serial port function, some must have their data direction bits (in the TRIS register) appropriately programmed. That is:

- SDI is automatically controlled by the SPI module
- SDO must have TRISC<5> cleared
- SCK (Master mode) must have TRISC<3> cleared
- SCK (Slave mode) must have TRISC<3> set
- $\overline{SS}$ must have TRISA<5> set

Any serial port function that is not desired may be overridden by programming the corresponding data direction (TRIS) register to the opposite value.

8.1.3 TYPICAL CONNECTION

Figure 8-5 shows a typical connection between two microcontrollers. The master controller (Processor 1) initiates the data transfer by sending the SCK signal. Data is shifted out of both shift registers on their programmed clock edge, and latched on the opposite edge of the clock. Both processors should be programmed to same Clock Polarity (CKP), then both controllers would send and receive data at the same time. Whether the data is meaningful (or dummy data) depends on the application software. This leads to three scenarios for data transmission:

- Master sends data — Slave sends dummy data
- Master sends data — Slave sends data
- Master sends dummy data — Slave sends data

FIGURE 8-5: SPI MASTER/SLAVE CONNECTION

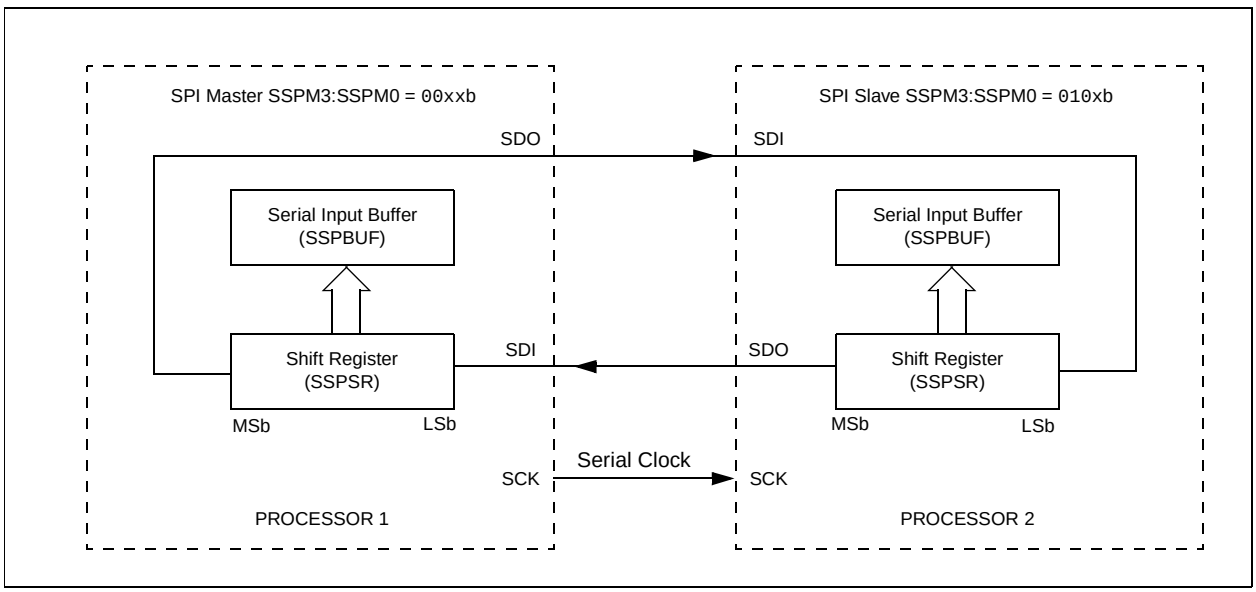

 © 1999 Microchip Technology Inc.

8.1.4 MASTER MODE

The master can initiate the data transfer at any time because it controls the SCK. The master determines when the slave (Processor 2, Figure 8-5) is to broadcast data by the software protocol.

In master mode the data is transmitted/received as soon as the SSPBUF register is written to. If the SPI module is only going to receive, the SDO output could be disabled (programmed as an input). The SSPSR register will continue to shift in the signal present on the SDI pin at the programmed clock rate. As each byte is received, it will be loaded into the SSPBUF register as if a normal received byte (interrupts and status bits appropriately set). This could be useful in receiver applications as a “line activity monitor”.

The clock polarity is selected by appropriately programming bit CKP (SSPCON<4>). This then would give waveforms for SPI communication as shown in Figure 8-6, Figure 8-8, and Figure 8-9 where the MSb is transmitted first. In master mode, the SPI clock rate (bit rate) is user programmable to be one of the following:

- FOSC/4 (or TCY)
- FOSC/16 (or 4 • TCY)
- FOSC/64 (or 16 • TCY)
- Timer2 output/2

This allows a maximum bit clock frequency (at 20 MHz) of 8.25 MHz.

Figure 8-6 shows the waveforms for Master mode. When CKE = 1, the SDO data is valid before there is a clock edge on SCK. The change of the input sample is shown based on the state of the SMP bit. The time when the SSPBUF is loaded with the received data is shown.

FIGURE 8-6: SPI MODE WAVEFORM (MASTER MODE)

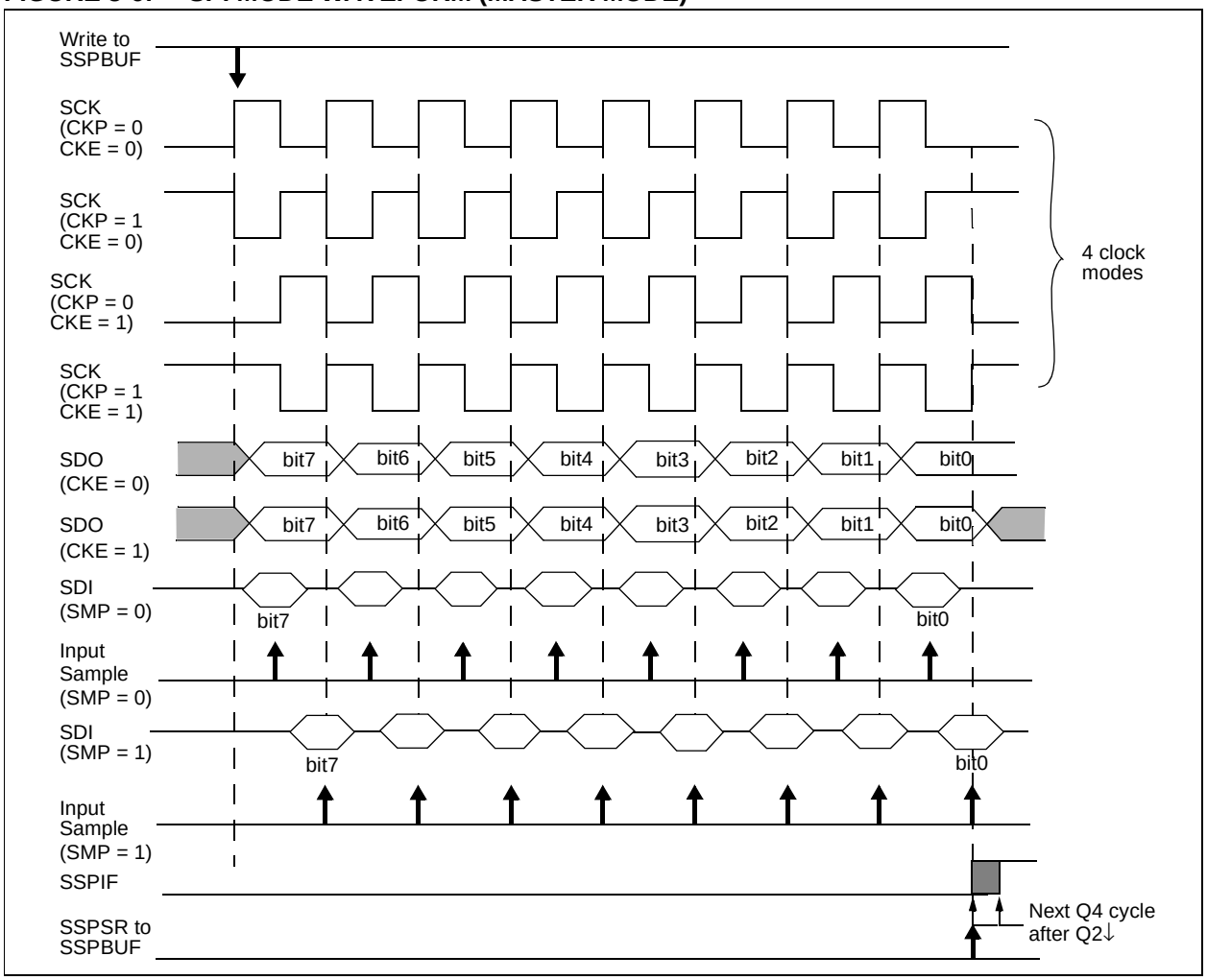

8.1.5 SLAVE MODE

In slave mode, the data is transmitted and received as the external clock pulses appear on SCK. When the last bit is latched the interrupt flag bit SSPIF (PIR1<3>) is set.

While in slave mode the external clock is supplied by the external clock source on the SCK pin. This external clock must meet the minimum high and low times as specified in the electrical specifications.

While in sleep mode, the slave can transmit/receive data. When a byte is received the device will wake-up from sleep.

8.1.6 SLAVE SELECT SYNCHRONIZATION

The $\overline{SS}$ pin allows a synchronous slave mode. The SPI must be in slave mode with $\overline{SS}$ pin control enabled (SSPCON<3:0> = 0100). The pin must not be driven low for the $\overline{SS}$ pin to function as an input. TRISA<5> must be set. When the $\overline{SS}$ pin is low, transmission and reception are enabled and the SDO pin is driven. When the $\overline{SS}$ pin goes high, the SDO pin is no longer driven, even if in the middle of a transmitted byte, and becomes a floating output. External pull-up/ pull-down resistors may be desirable, depending on the application.

> **Note:** When the SPI module is in Slave Mode with $\overline{SS}$ pin control enabled, (SSPCON<3:0> = 0100) the SPI module will reset if the $\overline{SS}$ pin is set to VDD.
>
> **Note:** If the SPI is used in Slave Mode with CKE = '1', then $\overline{SS}$ pin control must be enabled.

When the SPI module resets, the bit counter is forced to 0. This can be done by either forcing the $\overline{SS}$ pin to a high level or clearing the SSPEN bit.

To emulate two-wire communication, the SDO pin can be connected to the SDI pin. When the SPI needs to operate as a receiver the SDO pin can be configured as an input. This disables transmissions from the SDO. The SDI can always be left as an input (SDI function) since it cannot create a bus conflict.

FIGURE 8-7: SLAVE SYNCHRONIZATION WAVEFORM

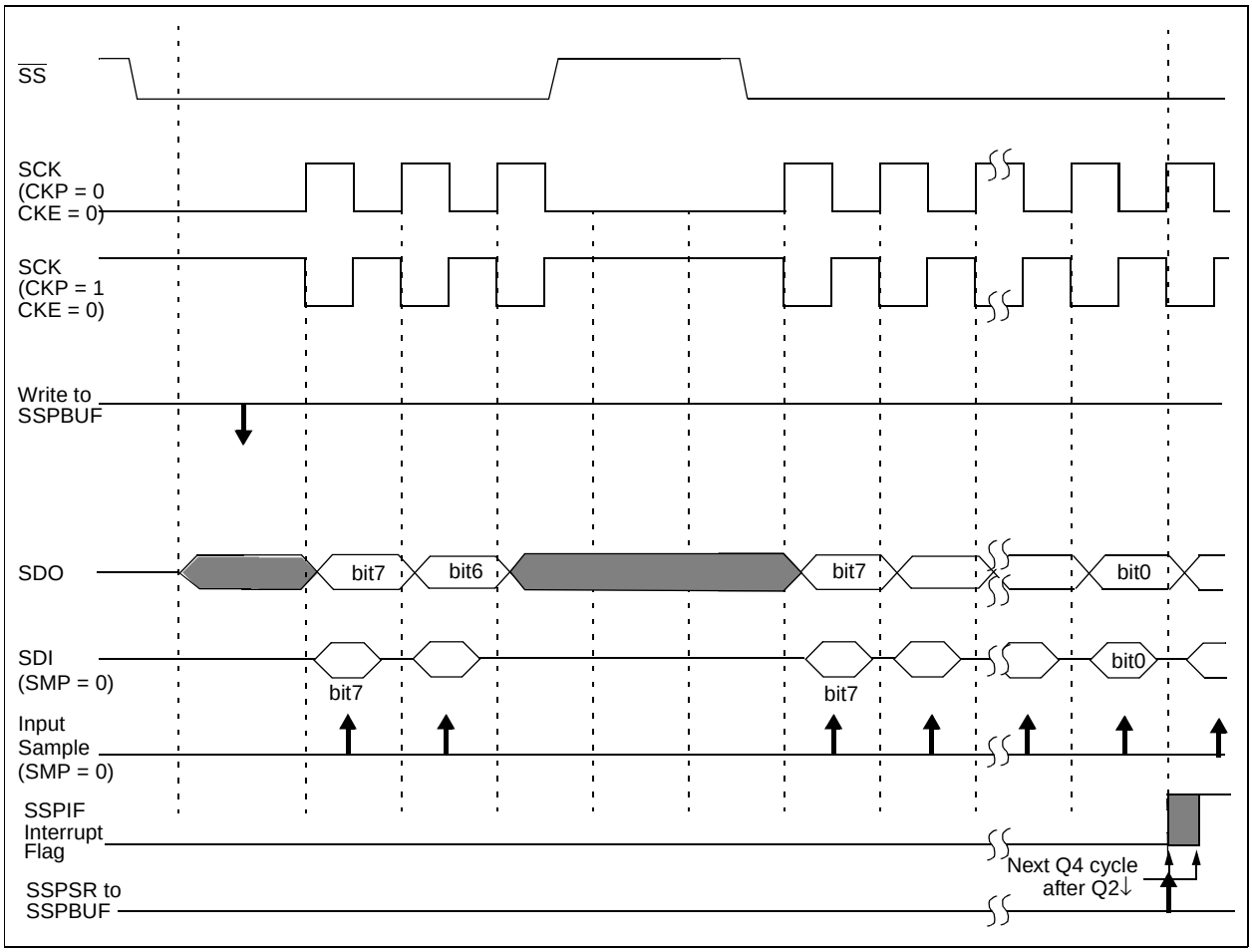

 © 1999 Microchip Technology Inc.

FIGURE 8-8: SPI SLAVE MODE WAVEFORM (CKE = 0)

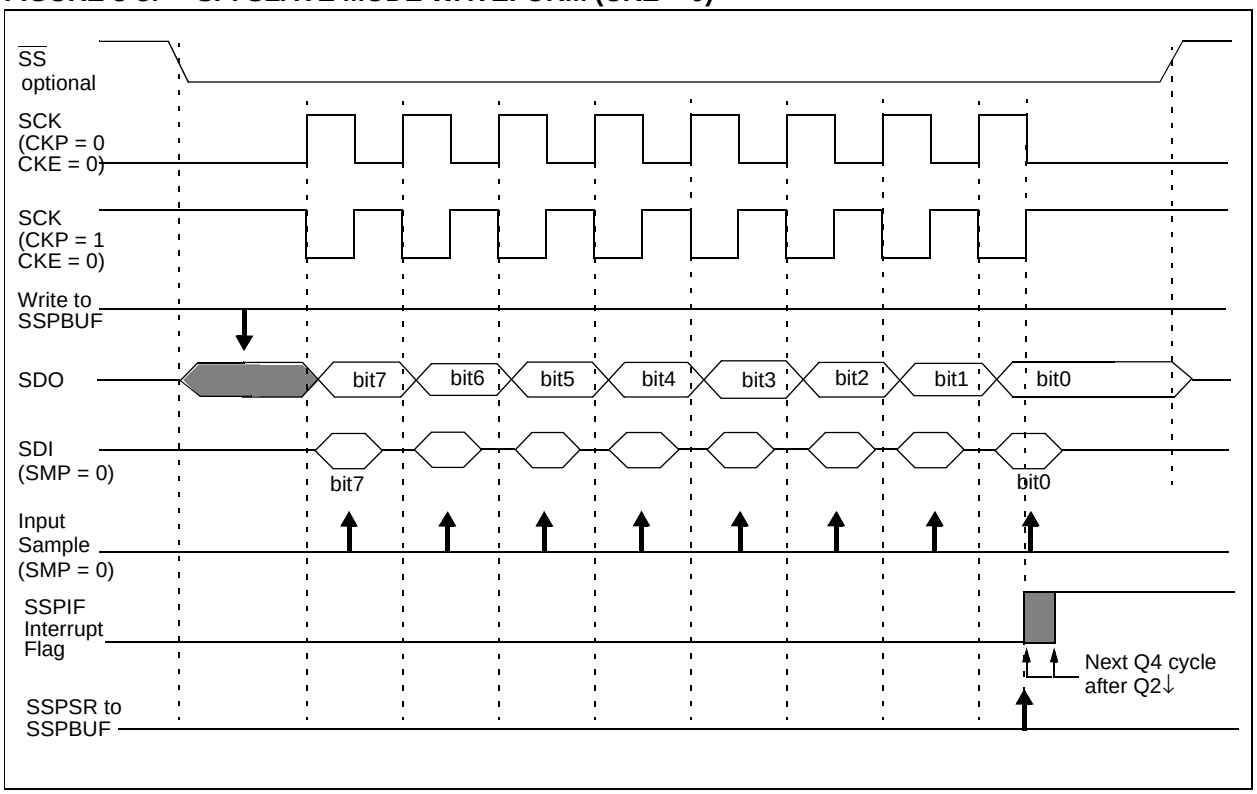

FIGURE 8-9: SPI SLAVE MODE WAVEFORM (CKE = 1)

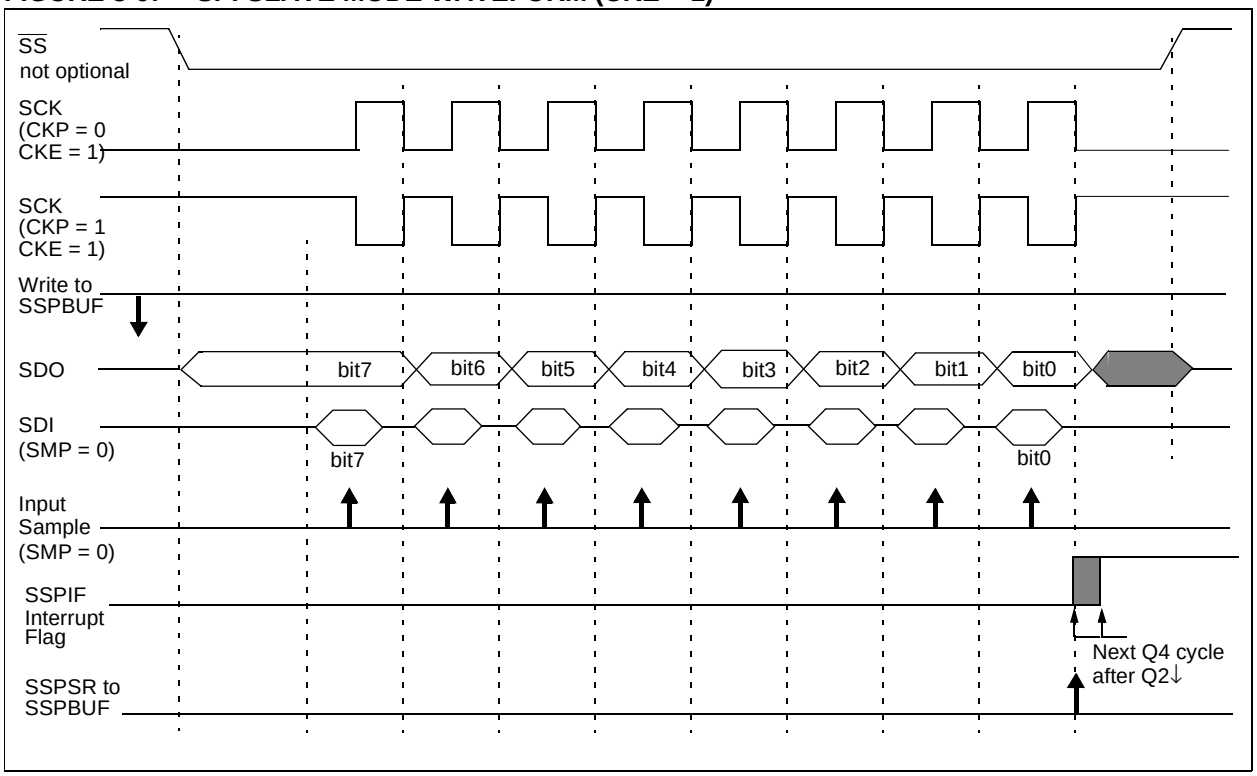

8.1.7 SLEEP OPERATION

In master mode all module clocks are halted, and the transmission/reception will remain in that state until the device wakes from sleep. After the device returns to normal mode, the module will continue to transmit/receive data.

In slave mode, the SPI transmit/receive shift register operates asynchronously to the device. This allows the device to be placed in sleep mode, and data to be shifted into the SPI transmit/receive shift register. When all 8-bits have been received, the MSSP interrupt flag bit will be set and if enabled will wake the device from sleep.

8.1.8 EFFECTS OF A RESET

A reset disables the MSSP module and terminates the current transfer.

TABLE 8-1 REGISTERS ASSOCIATED WITH SPI OPERATION

Address	Name	Bit 7	Bit 6	Bit 5	Bit 4	Bit 3	Bit 2	Bit 1	Bit 0	POR, BOR	$\overline{\text{MCLR}}$, WDT
0Bh, 8Bh, 10Bh,18Bh	INTCON	GIE	PEIE	T0IE	INTE	RBIE	T0IF	INTF	RBIF	0000 000x	0000 000u
0Ch	PIR1	PSPIF(1)	ADIF	RCIF	TXIF	SSPIF	CCP1IF	TMR2IF	TMR1IF	0000 0000	0000 0000
8Ch	PIE1	PSPIE(1)	ADIE	RCIE	TXIE	SSPIE	CCP1IE	TMR2IE	TMR1IE	0000 0000	0000 0000
13h	SSPBUF	Synchronous Serial Port Receive Buffer/Transmit Register								xxxx xxxx	uuuu uuuu
14h	SSPCON	WCOL	SSPOV	SSPEN	CKP	SSPM3	SSPM2	SSPM1	SSPM0	0000 0000	0000 0000
94h	SSPSTAT	SMP	CKE	D/$\overline{\text{A}}$	P	S	R/$\overline{\text{W}}$	UA	BF	0000 0000	0000 0000

Legend: x = unknown, u = unchanged, - = unimplemented read as '0'. Shaded cells are not used by the SSP in SPI mode.
Note 1: These bits are reserved on the 28-pin devices, always maintain these bits clear.

 © 1999 Microchip Technology Inc.

8.2 MSSP I²C Operation

The MSSP module in I²C mode fully implements all master and slave functions (including general call support) and provides interrupts on start and stop bits in hardware to determine a free bus (multi-master function). The MSSP module implements the standard mode specifications as well as 7-bit and 10-bit addressing.

Refer to Application Note AN578, *"Use of the SSP Module in the I²C Multi-Master Environment."*

A "glitch" filter is on the SCL and SDA pins when the pin is an input. This filter operates in both the 100 kHz and 400 kHz modes. In the 100 kHz mode, when these pins are an output, there is a slew rate control of the pin that is independant of device frequency.

FIGURE 8-10: I²C SLAVE MODE BLOCK DIAGRAM

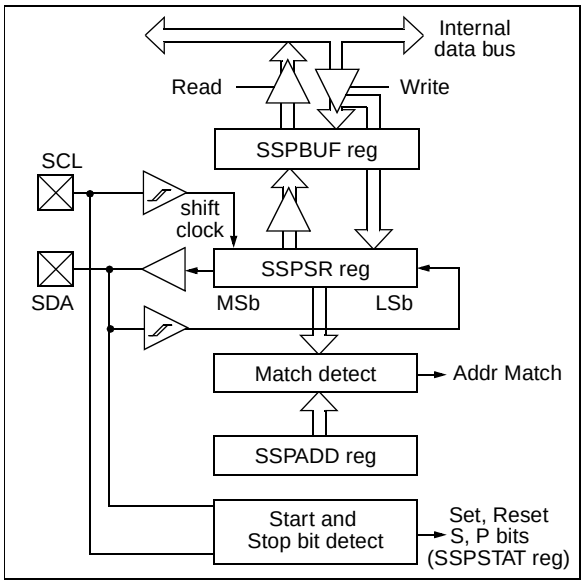

FIGURE 8-11: I²C MASTER MODE BLOCK DIAGRAM

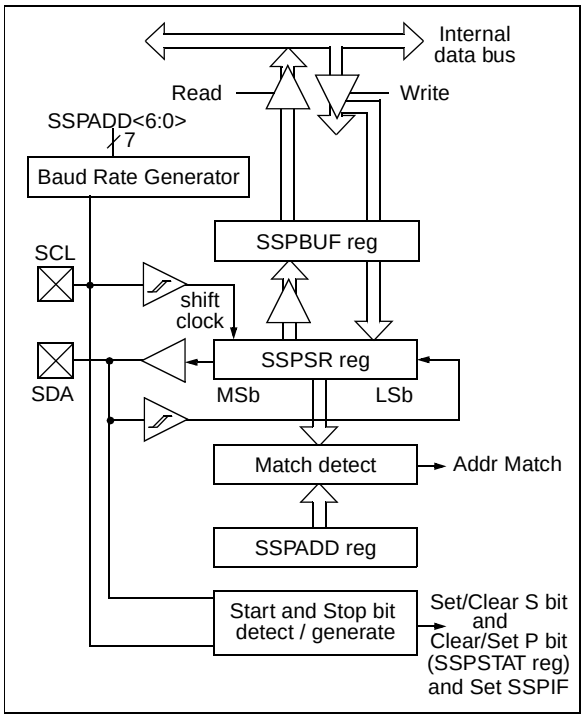

Two pins are used for data transfer. These are the SCL pin, which is the clock, and the SDA pin, which is the data. The SDA and SCL pins that are automatically configured when the I²C mode is enabled. The SSP module functions are enabled by setting SSP Enable bit SSPEN (SSPCON<5>).

The MSSP module has six registers for I²C operation. They are the:

- SSP Control Register (SSPCON)
- SSP Control Register2 (SSPCON2)
- SSP Status Register (SSPSTAT)
- Serial Receive/Transmit Buffer (SSPBUF)
- SSP Shift Register (SSPSR) - Not directly accessible
- SSP Address Register (SSPADD)

The SSPCON register allows control of the I²C operation. Four mode selection bits (SSPCON<3:0>) allow one of the following I²C modes to be selected:

- I²C Slave mode (7-bit address)
- I²C Slave mode (10-bit address)
- I²C Master mode, clock = OSC/4 (SSPADD +1)

Before selecting any I²C mode, the SCL and SDA pins must be programmed to inputs by setting the appropriate TRIS bits. Selecting an I²C mode, by setting the SSPEN bit, enables the SCL and SDA pins to be used as the clock and data lines in I²C mode.

The SSPSTAT register gives the status of the data transfer. This information includes detection of a START (S) or STOP (P) bit, specifies if the received byte was data or address if the next byte is the completion of 10-bit address, and if this will be a read or write data transfer.

SSPBUF is the register to which the transfer data is written to or read from. The SSPSR register shifts the data in or out of the device. In receive operations, the SSPBUF and SSPSR create a doubled buffered receiver. This allows reception of the next byte to begin before reading the last byte of received data. When the complete byte is received, it is transferred to the SSPBUF register and flag bit SSPIF is set. If another complete byte is received before the SSPBUF register is read, a receiver overflow has occurred and bit SSPOV (SSPCON<6>) is set and the byte in the SSPSR is lost.

The SSPADD register holds the slave address. In 10-bit mode, the user needs to write the high byte of the address (`1111 0 A9 A8 0`). Following the high byte address match, the low byte of the address needs to be loaded (A7:A0).

8.2.1 SLAVE MODE

In slave mode, the SCL and SDA pins must be configured as inputs. The MSSP module will override the input state with the output data when required (slave-transmitter).

When an address is matched or the data transfer after an address match is received, the hardware automatically will generate the acknowledge ($\overline{ACK}$) pulse, and then load the SSPBUF register with the received value currently in the SSPSR register.

There are certain conditions that will cause the MSSP module not to give this $\overline{ACK}$ pulse. These are if either (or both):

a) The buffer full bit BF (SSPSTAT<0>) was set before the transfer was received.
b) The overflow bit SSPOV (SSPCON<6>) was set before the transfer was received.

If the BF bit is set, the SSPSR register value is not loaded into the SSPBUF, but bit SSPIF and SSPOV are set. Table 8-2 shows what happens when a data transfer byte is received, given the status of bits BF and SSPOV. The shaded cells show the condition where user software did not properly clear the overflow condition. Flag bit BF is cleared by reading the SSPBUF register while bit SSPOV is cleared through software.

The SCL clock input must have a minimum high and low time for proper operation. The high and low times of the I^2C specification as well as the requirement of the MSSP module is shown in timing parameter #100 and parameter #101 of the Electrical Specifications.

8.2.1.1 ADDRESSING

Once the MSSP module has been enabled, it waits for a START condition to occur. Following the START condition, the 8-bits are shifted into the SSPSR register. All incoming bits are sampled with the rising edge of the clock (SCL) line. The value of register SSPSR<7:1> is compared to the value of the SSPADD register. The address is compared on the falling edge of the eighth clock (SCL) pulse. If the addresses match, and the BF and SSPOV bits are clear, the following events occur:

a) The SSPSR register value is loaded into the SSPBUF register on the falling edge of the 8th SCL pulse.
b) The buffer full bit, BF is set on the falling edge of the 8th SCL pulse.
c) An $\overline{ACK}$ pulse is generated.
d) SSP interrupt flag bit, SSPIF (PIR1<3>) is set (interrupt is generated if enabled) - on the falling edge of the 9th SCL pulse.

In 10-bit address mode, two address bytes need to be received by the slave. The five Most Significant bits (MSbs) of the first address byte specify if this is a 10-bit address. Bit R/$\overline{W}$ (SSPSTAT<2>) must specify a write so the slave device will receive the second address byte. For a 10-bit address the first byte would equal '`1111 0 A9 A8 0`', where A9 and A8 are the two MSbs of the address. The sequence of events for a 10-bit address is as follows, with steps 7- 9 for slave-transmitter:

1. Receive first (high) byte of Address (bits SSPIF, BF, and bit UA (SSPSTAT<1>) are set).
2. Update the SSPADD register with second (low) byte of Address (clears bit UA and releases the SCL line).
3. Read the SSPBUF register (clears bit BF) and clear flag bit SSPIF.
4. Receive second (low) byte of Address (bits SSPIF, BF, and UA are set).
5. Update the SSPADD register with the first (high) byte of Address. This will clear bit UA and release the SCL line.
6. Read the SSPBUF register (clears bit BF) and clear flag bit SSPIF.
7. Receive Repeated Start condition.
8. Receive first (high) byte of Address (bits SSPIF and BF are set).
9. Read the SSPBUF register (clears bit BF) and clear flag bit SSPIF.

Note:	Following the Repeated Start condition (step 7) in 10-bit mode, the user only needs to match the first 7-bit address. The user does not update the SSPADD for the second half of the address.

 © 1999 Microchip Technology Inc.

8.2.1.2 SLAVE RECEPTION

When the R/$\overline{W}$ bit of the address byte is clear and an address match occurs, the R/$\overline{W}$ bit of the SSPSTAT register is cleared. The received address is loaded into the SSPBUF register.

When the address byte overflow condition exists, then no acknowledge ($\overline{ACK}$) pulse is given. An overflow condition is defined as either bit BF (SSPSTAT<0>) is set or bit SSPOV (SSPCON<6>) is set.

An SSP interrupt is generated for each data transfer byte. Flag bit SSPIF (PIR1<3>) must be cleared in software. The SSPSTAT register is used to determine the status of the received byte.

> **Note:** The SSPBUF will be loaded if the SSPOV bit is set and the BF flag is cleared. If a read of the SSPBUF was performed, but the user did not clear the state of the SSPOV bit before the next receive occured. The $\overline{ACK}$ is not sent and the SSPBUF is updated.

TABLE 8-2 DATA TRANSFER RECEIVED BYTE ACTIONS

Status Bits as Data Transfer is Received				
BF	**SSPOV**	**SSPSR → SSPBUF**	**Generate $\overline{ACK}$ Pulse**	**Set bit SSPIF (SSP Interrupt occurs if enabled)**
0	0	Yes	Yes	Yes
1	0	No	No	Yes
1	1	No	No	Yes
0	1	Yes	No	Yes

Note 1: Shaded cells show the conditions where the user software did not properly clear the overflow condition.

8.2.1.3 SLAVE TRANSMISSION

When the R/$\overline{W}$ bit of the incoming address byte is set and an address match occurs, the R/$\overline{W}$ bit of the SSPSTAT register is set. The received address is loaded into the SSPBUF register. The $\overline{ACK}$ pulse will be sent on the ninth bit, and the SCL pin is held low. The transmit data must be loaded into the SSPBUF register, which also loads the SSPSR register. Then the SCL pin should be enabled by setting bit CKP (SSPCON<4>). The master must monitor the SCL pin prior to asserting another clock pulse. The slave devices may be holding off the master by stretching the clock. The eight data bits are shifted out on the falling edge of the SCL input. This ensures that the SDA signal is valid during the SCL high time (Figure 8-13).

An SSP interrupt is generated for each data transfer byte. The SSPIF flag bit must be cleared in software, and the SSPSTAT register is used to determine the status of the byte tranfer. The SSPIF flag bit is set on the falling edge of the ninth clock pulse.

As a slave-transmitter, the $\overline{ACK}$ pulse from the master-receiver is latched on the rising edge of the ninth SCL input pulse. If the SDA line was high (not $\overline{ACK}$), then the data transfer is complete. When the not $\overline{ACK}$ is latched by the slave, the slave logic is reset and the slave then monitors for another occurrence of the START bit. If the SDA line was low ($\overline{ACK}$), the transmit data must be loaded into the SSPBUF register, which also loads the SSPSR register. Then the SCL pin should be enabled by setting the CKP bit.

FIGURE 8-12: I²C WAVEFORMS FOR RECEPTION (7-BIT ADDRESS)

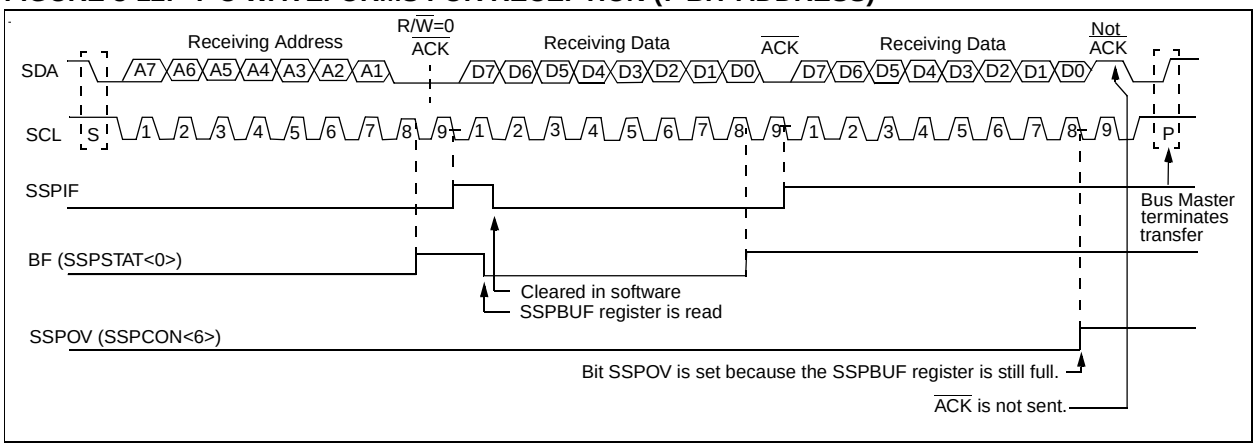

FIGURE 8-13: I²C WAVEFORMS FOR TRANSMISSION (7-BIT ADDRESS)

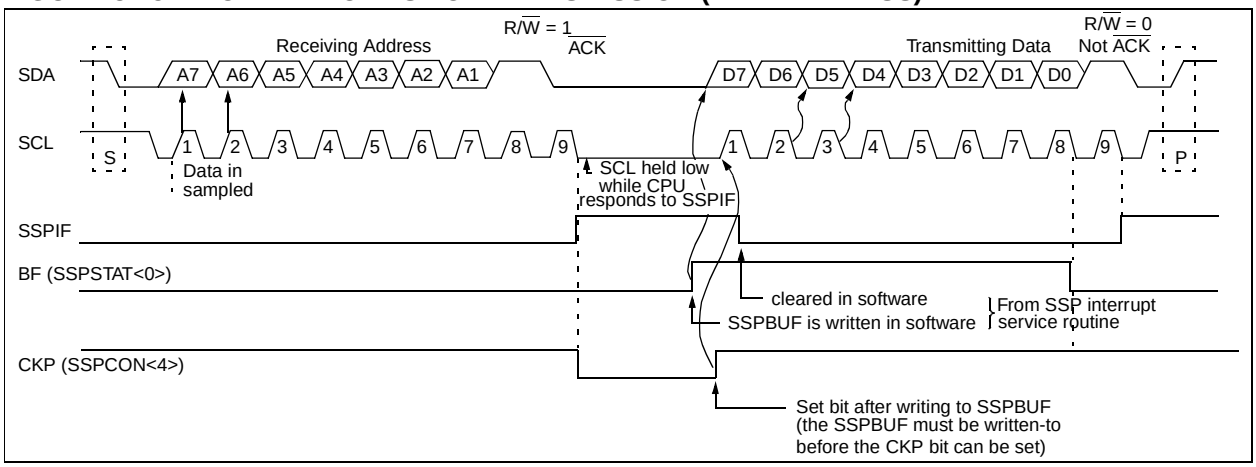

 © 1999 Microchip Technology Inc.

FIGURE 8-14: I²C SLAVE-TRANSMITTER (10-BIT ADDRESS)

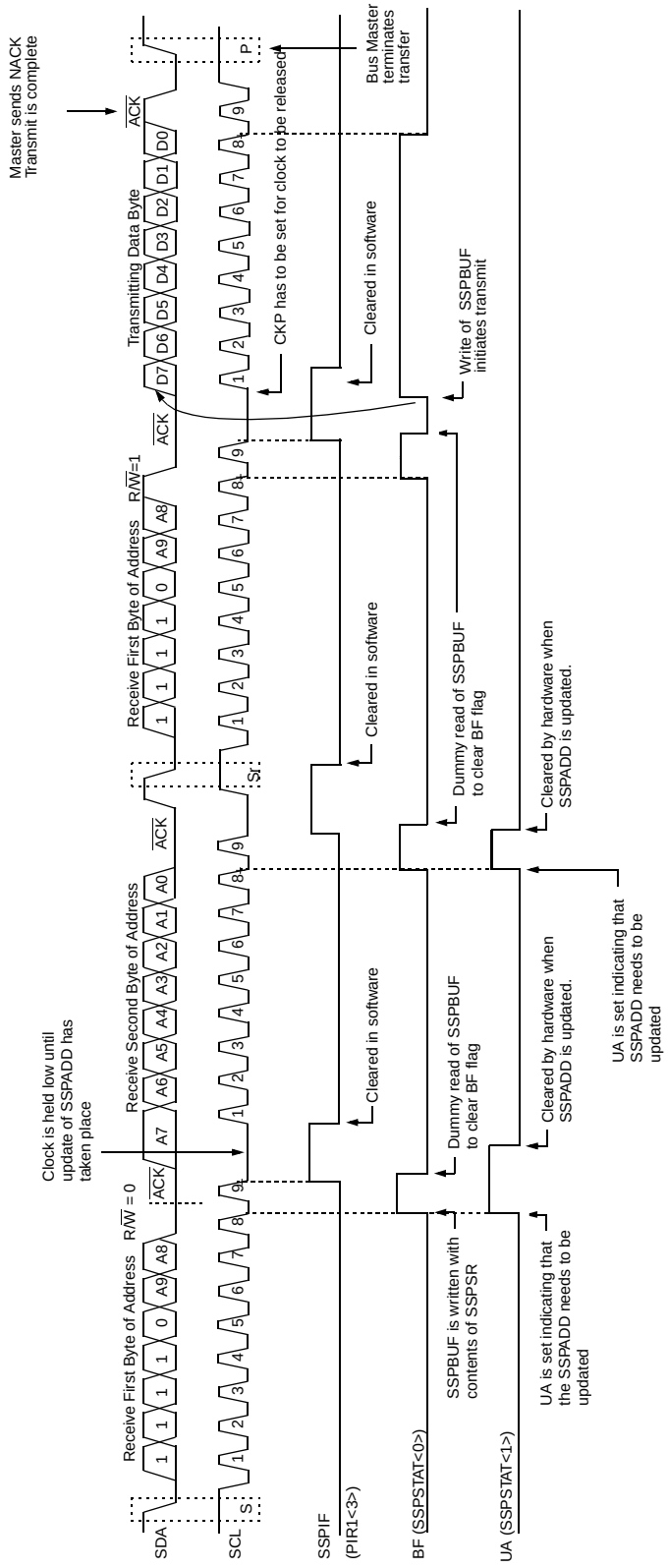

FIGURE 8-15: I²C SLAVE-RECEIVER (10-BIT ADDRESS)

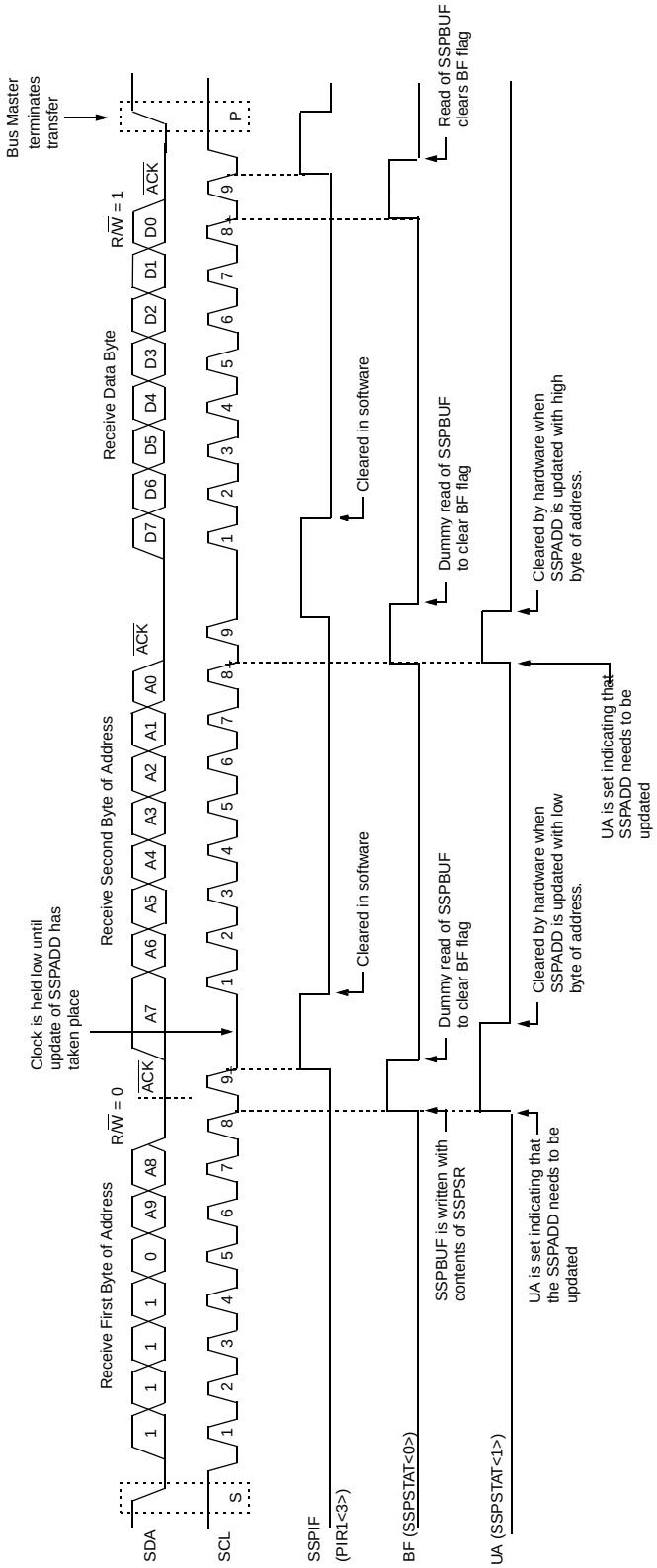

 © 1999 Microchip Technology Inc.

8.2.2 GENERAL CALL ADDRESS SUPPORT

The addressing procedure for the I^{2}C bus is such that the first byte after the START condition usually determines which device will be the slave addressed by the master. The exception is the general call address which can address all devices. When this address is used, all devices should, in theory, respond with an acknowledge.

The general call address is one of eight addresses reserved for specific purposes by the I^{2}C protocol. It consists of all 0's with R/$\overline{W}$ = 0

The general call address is recognized when the General Call Enable bit (GCEN) is enabled (SSPCON2<7> is set). Following a start-bit detect, 8-bits are shifted into SSPSR and the address is compared against SSPADD, and is also compared to the general call address, fixed in hardware.

If the general call address matches, the SSPSR is transfered to the SSPBUF, the BF flag is set (eighth bit), and on the falling edge of the ninth bit ($\overline{ACK}$ bit) the SSPIF flag is set.

When the interrupt is serviced. The source for the interrupt can be checked by reading the contents of the SSPBUF to determine if the address was device specific or a general call address.

In 10-bit mode, the SSPADD is required to be updated for the second half of the address to match, and the UA bit is set (SSPSTAT<1>). If the general call address is sampled when GCEN is set while the slave is configured in 10-bit address mode, then the second half of the address is not necessary, the UA bit will not be set, and the slave will begin receiving data after the acknowledge (Figure 8-16).

FIGURE 8-16: SLAVE MODE GENERAL CALL ADDRESS SEQUENCE (7 OR 10-BIT MODE)

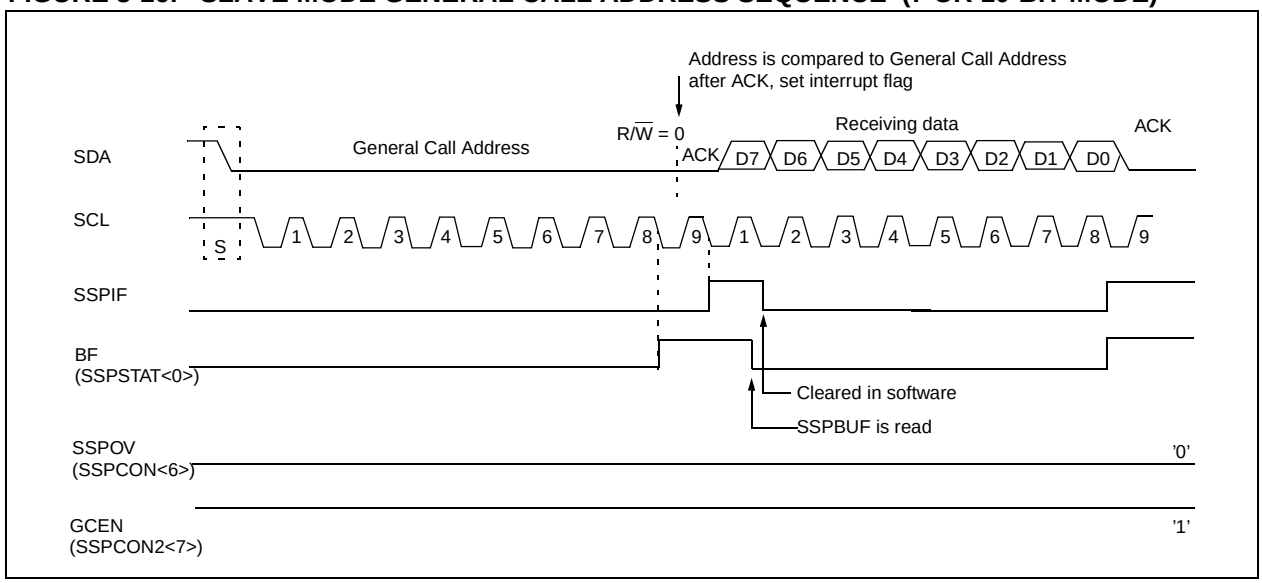

8.2.3 SLEEP OPERATION

While in sleep mode, the I^{2}C module can receive addresses or data, and when an address match or complete byte transfer occurs wake the processor from sleep (if the SSP interrupt is enabled).

8.2.4 EFFECTS OF A RESET

A reset diables the SSP module and terminates the current transfer.

TABLE 8-3 REGISTERS ASSOCIATED WITH I^{2}C OPERATION

Address	Name	Bit 7	Bit 6	Bit 5	Bit 4	Bit 3	Bit 2	Bit 1	Bit 0	POR, BOR	$\overline{\text{MCLR}}$, WDT
0Bh, 8Bh, 10Bh,18Bh	INTCON	GIE	PEIE	T0IE	INTE	RBIE	T0IF	INTF	RBIF	0000 000x	0000 000u
0Ch	PIR1	PSPIF(1)	ADIF	RCIF	TXIF	SSPIF	CCP1IF	TMR2IF	TMR1IF	0000 0000	0000 0000
8Ch	PIE1	PSPIE(1)	ADIE	RCIE	TXIE	SSPIE	CCP1IE	TMR2IE	TMR1IE	0000 0000	0000 0000
0Dh	PIR2	LVDIF	—	—	—	BCLIF	—	—	CCP2IF	0--- 0--0	0--- 0--0
8Dh	PIE2	LVDIE	—	—	—	BCLIE	—	—	CCP2IE	0--- 0--0	0--- 0--0
13h	SSPBUF	Synchronous Serial Port Receive Buffer/Transmit Register								xxxx xxxx	uuuu uuuu
14h	SSPCON	WCOL	SSPOV	SSPEN	CKP	SSPM3	SSPM2	SSPM1	SSPM0	0000 0000	0000 0000
91h	SSPCON2	GCEN	AKSTAT	AKDT	AKEN	RCEN	PEN	RSEN	SEN	0000 0000	0000 0000
94h	SSPSTAT	SMP	CKE	D/$\overline{\text{A}}$	P	S	R/$\overline{\text{W}}$	UA	BF	0000 0000	0000 0000

Legend: x = unknown, u = unchanged, - = unimplemented read as '0'. Shaded cells are not used by the SSP in I^{2}C mode.
Note 1: These bits are reserved on the 28-pin devices, always maintain these bits clear.
2: These bits are reserved on these devices, always maintain these bits clear.

 © 1999 Microchip Technology Inc.

8.2.5 MASTER MODE

Master mode of operation is supported by interrupt generation on the detection of the START and STOP conditions. The STOP (P) and START (S) bits are cleared from a reset or when the MSSP module is disabled. Control of the I^2C bus may be taken when the P bit is set, or the bus is idle with both the S and P bits clear.

In master mode, the SCL and SDA lines are manipulated by the MSSP hardware.

The following events will cause SSP Interrupt Flag bit, SSPIF, to be set (SSP Interrupt if enabled):

- START condition
- STOP condition
- Data transfer byte transmitted/received
- Acknowledge transmit
- Repeated Start

FIGURE 8-17: SSP BLOCK DIAGRAM (I^2C MASTER MODE)

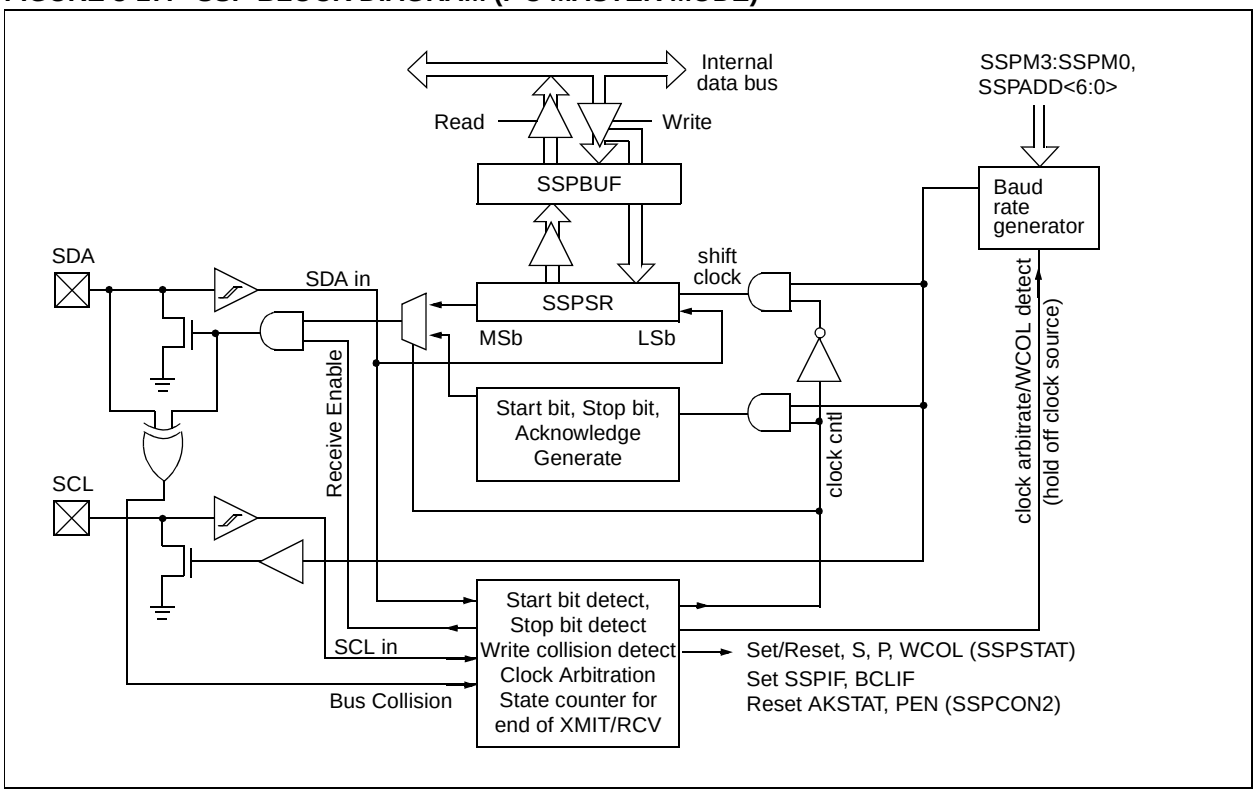

8.2.6 MULTI-MASTER OPERATION

In multi-master mode, the interrupt generation on the detection of the START and STOP conditions allows the determination of when the bus is free. The STOP (P) and START (S) bits are cleared from a reset or when the MSSP module is disabled. Control of the I^2C bus may be taken when bit P (SSPSTAT<4>) is set, or the bus is idle with both the S and P bits clear. When the bus is busy, enabling the SSP Interrupt will generate the interrupt when the STOP condition occurs.

In multi-master operation, the SDA line must be monitored, for abitration, to see if the signal level is the expected output level. This check is performed in hardware, with the result placed in the BCLIF bit.

The states where arbitration can be lost are:

- Address Transfer
- Data Transfer
- A Start Condition
- A Repeated Start Condition
- An Acknowledge Condition

8.2.7 I^2C MASTER OPERATION SUPPORT

Master Mode is enabled by setting and clearing the appropriate SSPM bits in SSPCON and by setting the SSPEN bit. Once master mode is enabled, the user has six options.

- Assert a start condition on SDA and SCL.
- Assert a Repeated Start condition on SDA and SCL.
- Write to the SSPBUF register initiating transmission of data/address.
- Generate a stop condition on SDA and SCL.
- Configure the I^2C port to receive data.
- Generate an Acknowledge condition at the end of a received byte of data.

Note: The MSSP Module, when configured in I^2C Master Mode, does not allow queueing of events. For instance: The user is not allowed to initiate a start condition, and immediately write the SSPBUF register to initiate transmission before the START condition is complete. In this case the SSPBUF will not be written to, and the WCOL bit will be set, indicating that a write to the SSPBUF did not occur.

8.2.7.4 I^2C MASTER MODE OPERATION

The master device generates all of the serial clock pulses and the START and STOP conditions. A transfer is ended with a STOP condition or with a Repeated Start condition. Since the Repeated Start condition is also the beginning of the next serial transfer, the I^2C bus will not be released.

In Master Transmitter mode, serial data is output through SDA, while SCL outputs the serial clock. The first byte transmitted contains the slave address of the receiving device (7 bits) and the Read/Write (R/$\overline{W}$) bit. In this case, the R/$\overline{W}$ bit will be logic '0'. Serial data is transmitted 8 bits at a time. After each byte is transmitted, an acknowledge bit is received. START and STOP conditions are output to indicate the beginning and the end of a serial transfer.

In Master receive mode the first byte transmitted contains the slave address of the transmitting device (7 bits) and the R/$\overline{W}$ bit. In this case the R/$\overline{W}$ bit will be logic '1'. Thus the first byte transmitted is a 7-bit slave address followed by a '1' to indicate receive bit. Serial data is received via SDA while SCL outputs the serial clock. Serial data is received 8 bits at a time. After each byte is received, an acknowledge bit is transmitted. START and STOP conditions indicate the beginning and end of transmission.

The baud rate generator used for SPI mode operation is now used to set the SCL clock frequency for either 100 kHz, 400 kHz, or 1 MHz I^2C operation. The baud rate generator reload value is contained in the lower 7 bits of the SSPADD register. The baud rate generator will automatically begin counting on a write to the SSPBUF. Once the given operation is complete (i.e. transmission of the last data bit is followed by ACK), the internal clock will automatically stop counting and the SCL pin will remain in its last state

A typical transmit sequence would go as follows:

a) The user generates a Start Condition by setting the START enable bit (SEN) in SSPCON2.
b) SSPIF is set. The module will wait the required start time before any other operation takes place.
c) The user loads the SSPBUF with address to transmit.
d) Address is shifted out the SDA pin until all 8 bits are transmitted.
e) The MSSP Module shifts in the ACK bit from the slave device, and writes its value into the SSPCON2 register (SSPCON2<6>).
f) The module generates an interrupt at the end of the ninth clock cycle by setting SSPIF.
g) The user loads the SSPBUF with eight bits of data.
h) DATA is shifted out the SDA pin until all 8 bits are transmitted.

 © 1999 Microchip Technology Inc.

i) The MSSP Module shifts in the ACK bit from the slave device, and writes its value into the SSPCON2 register (SSPCON2<6>).

j) The MSSP module generates an interrupt at the end of the ninth clock cycle by setting the SSPIF bit.

k) The user generates a STOP condition by setting the STOP enable bit PEN in SSPCON2.

l) Interrupt is generated once the STOP condition is complete.

8.2.8 BAUD RATE GENERATOR

In I^2C master mode, the reload value for the BRG is located in the lower 7 bits of the SSPADD register (Figure 8-18). When the BRG is loaded with this value, the BRG counts down to 0 and stops until another reload has taken place. The BRG count is decremented twice per instruction cycle (TCY) on the Q2 and Q4 clock.

In I^2C master mode, the BRG is reloaded automatically. If Clock Arbitration is taking place for instance, the BRG will be reloaded when the SCL pin is sampled high (Figure 8-19).

FIGURE 8-18: BAUD RATE GENERATOR BLOCK DIAGRAM

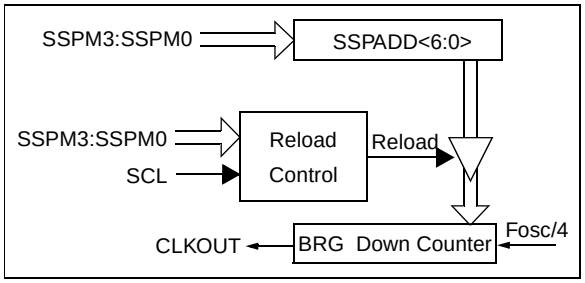

FIGURE 8-19: BAUD RATE GENERATOR TIMING WITH CLOCK ARBITRATION

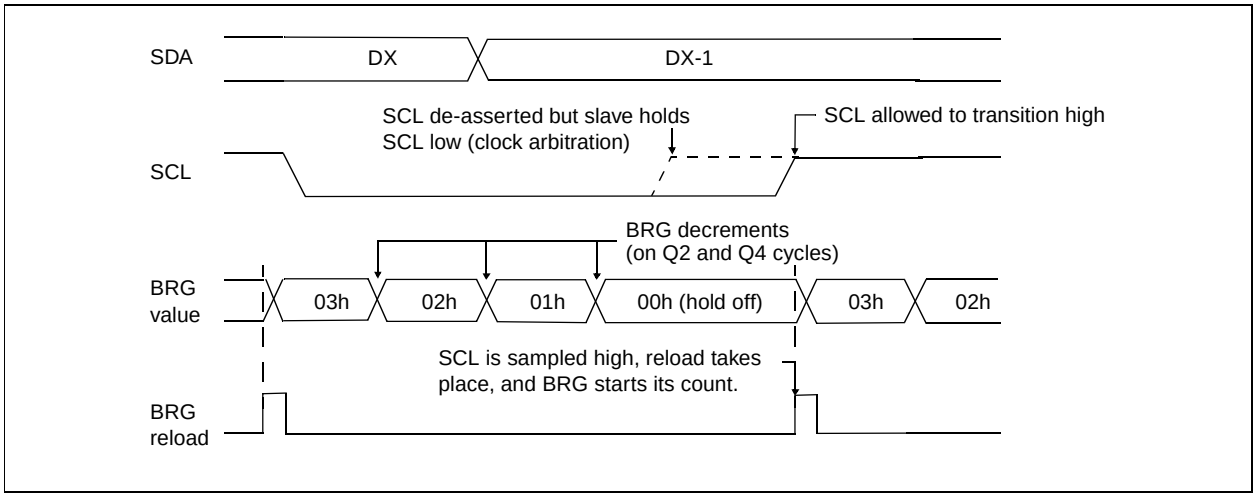

8.2.9 I²C MASTER MODE START CONDITION TIMING

To initiate a START condition, the user sets the start condition enable bit, SEN (SSPCON2<0>). If the SDA and SCL pins are sampled high, the baud rate generator is re-loaded with the contents of SSPADD<6:0>, and starts its count. If SCL and SDA are both sampled high when the baud rate generator times out (T_{BRG}), the SDA pin is driven low. The action of the SDA being driven low while SCL is high is the START condition, and causes the S bit (SSPSTAT<3>) to be set. Following this, the baud rate generator is reloaded with the contents of SSPADD<6:0> and resumes its count. When the baud rate generator times out (T_{BRG}), the SEN bit (SSPCON2<0>) will be automatically cleared by hardware, the baud rate generator is suspended leaving the SDA line held low, and the START condition is complete.

Note:	If at the beginning of START condition the SDA and SCL pins are already sampled low, or if during the START condition the SCL line is sampled low before the SDA line is driven low, a bus collision occurs, the Bus Collision Interrupt Flag (BCLIF) is set, the START condition is aborted, and the I²C module is reset into its IDLE state.

8.2.9.5 WCOL STATUS FLAG

If the user writes the SSPBUF when an START sequence is in progress, then WCOL is set and the contents of the buffer are unchanged (the write doesn't occur).

Note:	Because queueing of events is not allowed, writing to the lower 5 bits of SSPCON2 is disabled until the START condition is complete.

FIGURE 8-20: FIRST START BIT TIMING

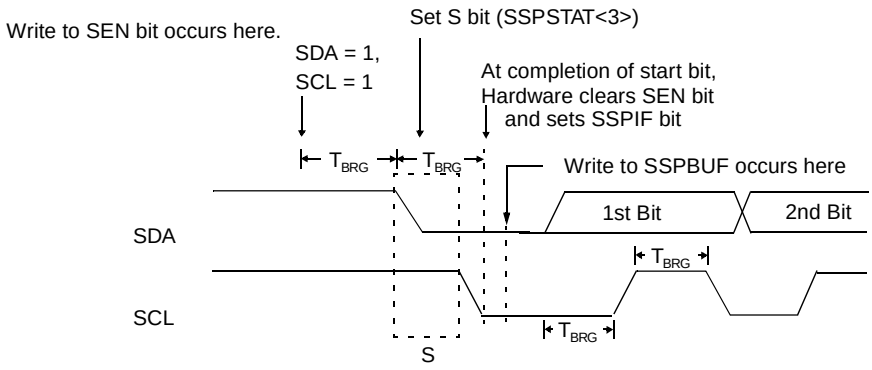

 © 1999 Microchip Technology Inc.

FIGURE 8-21: START CONDITION FLOWCHART

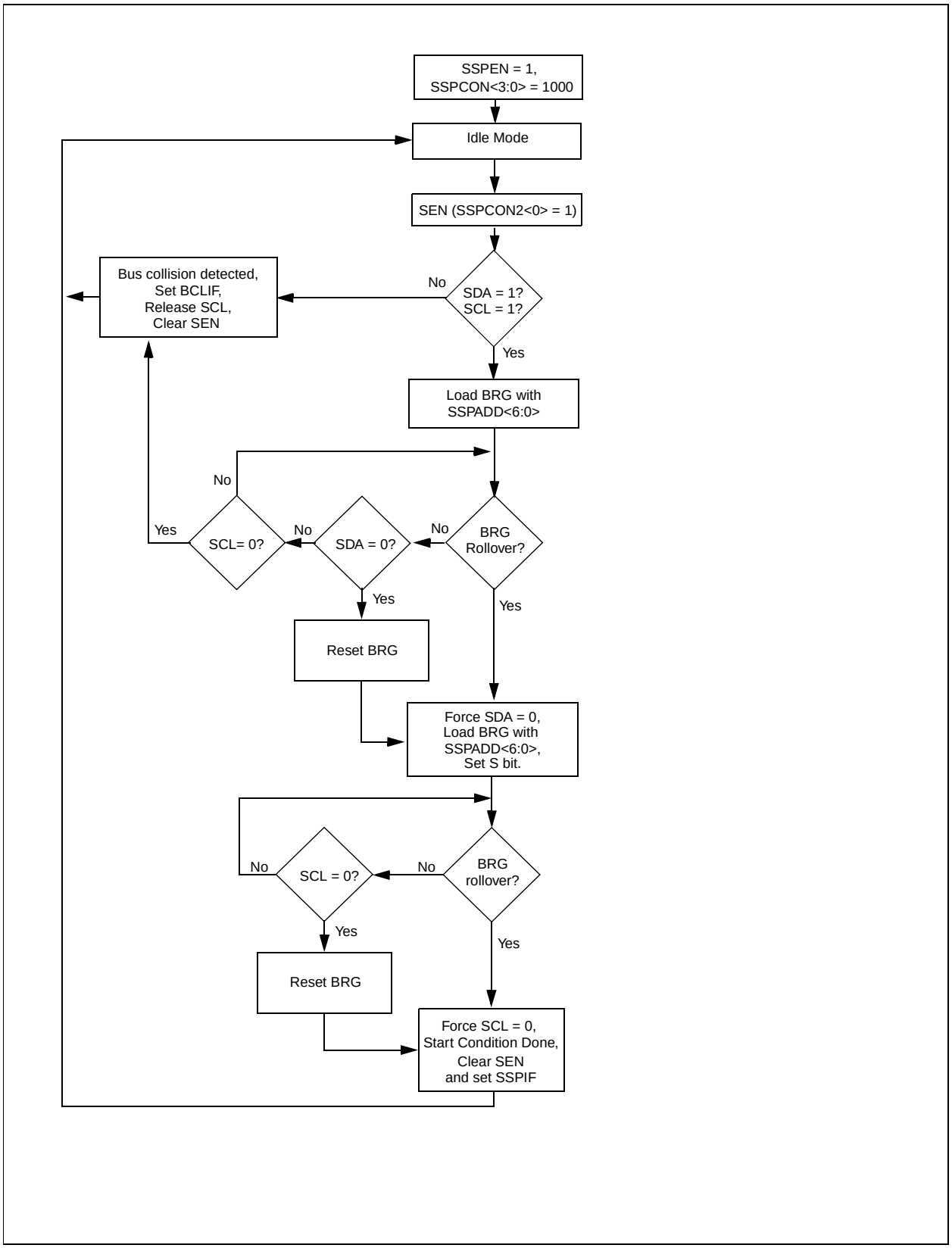

8.2.10 I²C MASTER MODE REPEATED START CONDITION TIMING

A Repeated Start condition occurs when the RSEN bit (SSPCON2<1>) is programmed high and the I²C module is in the idle state. When the RSEN bit is set, the SCL pin is asserted low. When the SCL pin is sampled low, the baud rate generator is loaded with the contents of SSPADD<6:0>, and begins counting. The SDA pin is released (brought high) for one baud rate generator count (T_{BRG}). When the baud rate generator times out, if SDA is sampled high, the SCL pin will be de-asserted (brought high). When SCL is sampled high the baud rate generator is re-loaded with the contents of SSPADD<6:0> and begins counting. SDA and SCL must be sampled high for one T_{BRG}. This action is then followed by assertion of the SDA pin (SDA is low) for one T_{BRG} while SCL is high. Following this, the RSEN bit in the SSPCON2 register will be automatically cleared, and the baud rate generator is not reloaded, leaving the SDA pin held low. As soon as a start condition is detected on the SDA and SCL pins, the S bit (SSPSTAT<3>) will be set. The SSPIF bit will not be set until the baud rate generator has timed-out.

Note 1: If RSEN is programmed while any other event is in progress, it will not take effect.

Note 2: A bus collision during the Repeated Start condition occurs if:

- SDA is sampled low when SCL goes from low to high.
- SCL goes low before SDA is asserted low. This may indicate that another master is attempting to transmit a data "1".

Immediately following the SSPIF bit getting set, the user may write the SSPBUF with the 7-bit address in 7-bit mode, or the default first address in 10-bit mode. After the first eight bits are transmitted and an ACK is received, the user may then transmit an additional eight bits of address (10-bit mode) or eight bits of data (7-bit mode).

8.2.10.6 WCOL STATUS FLAG

If the user writes the SSPBUF when a Repeated Start sequence is in progress, then WCOL is set and the contents of the buffer are unchanged (the write doesn't occur).

Note: Because queueing of events is not allowed, writing of the lower 5 bits of SSPCON2 is disabled until the Repeated Start condition is complete.

FIGURE 8-22: REPEAT START CONDITION WAVEFORM

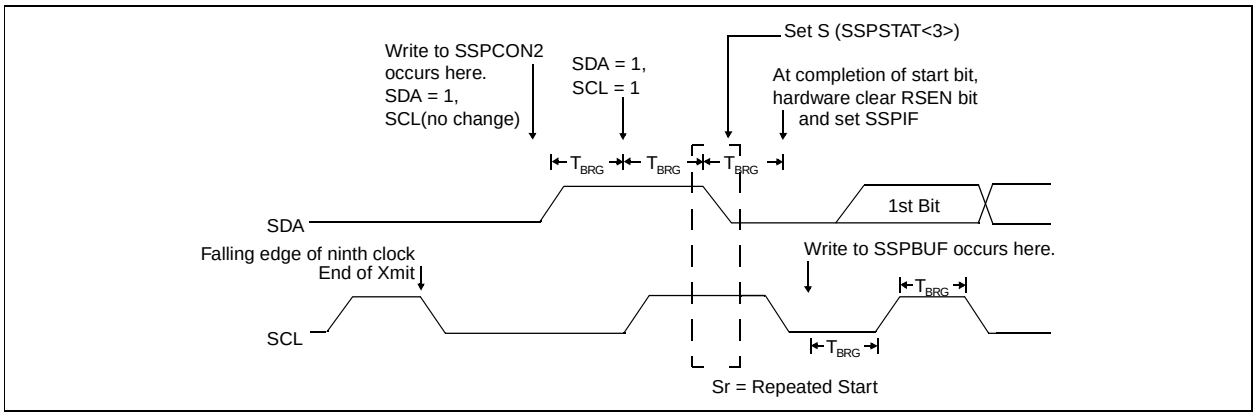

 © 1999 Microchip Technology Inc.

FIGURE 8-23: REPEATED START CONDITION FLOWCHART (PAGE 1)

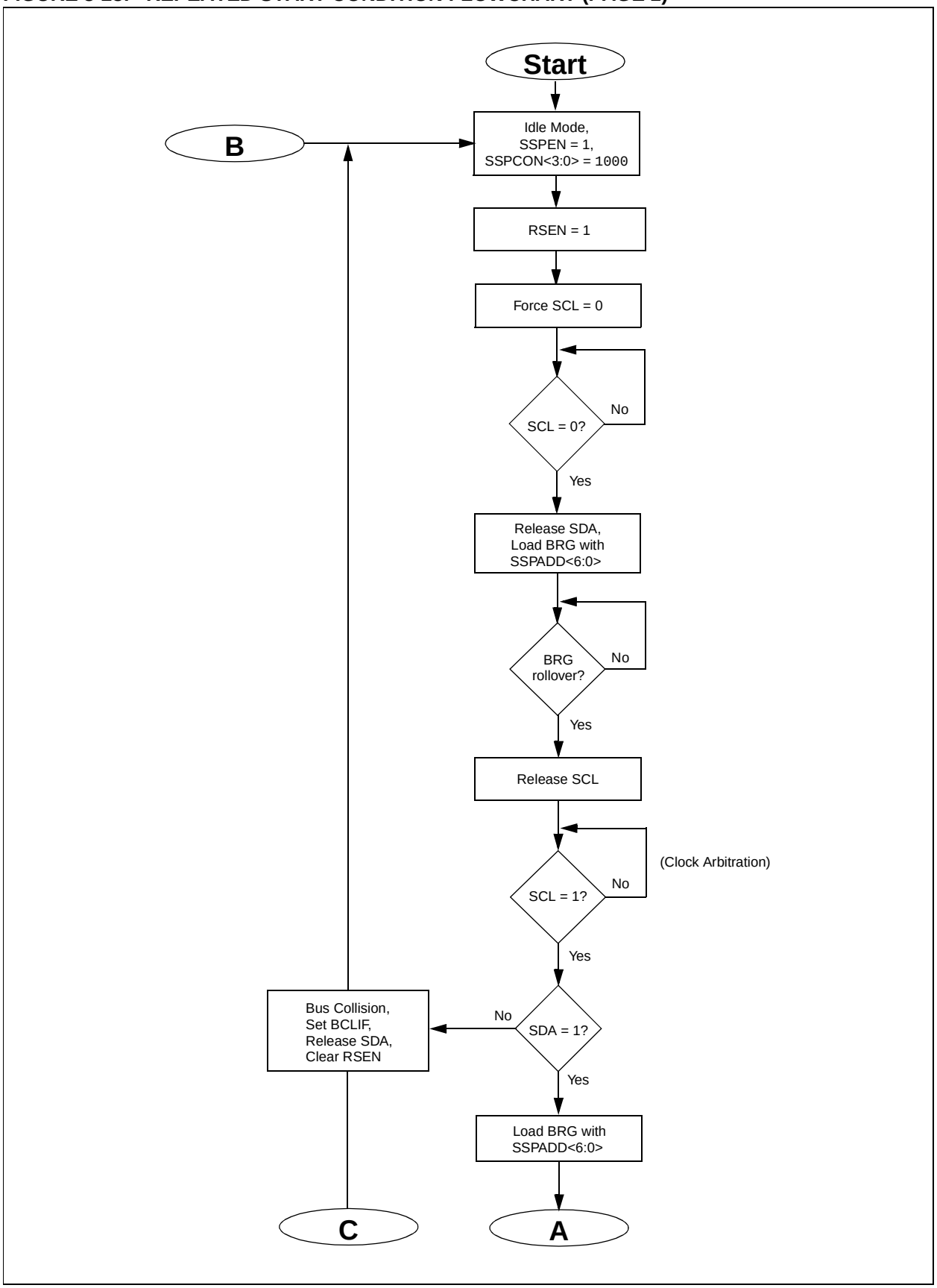

FIGURE 8-24: REPEATED START CONDITION FLOWCHART (PAGE 2)

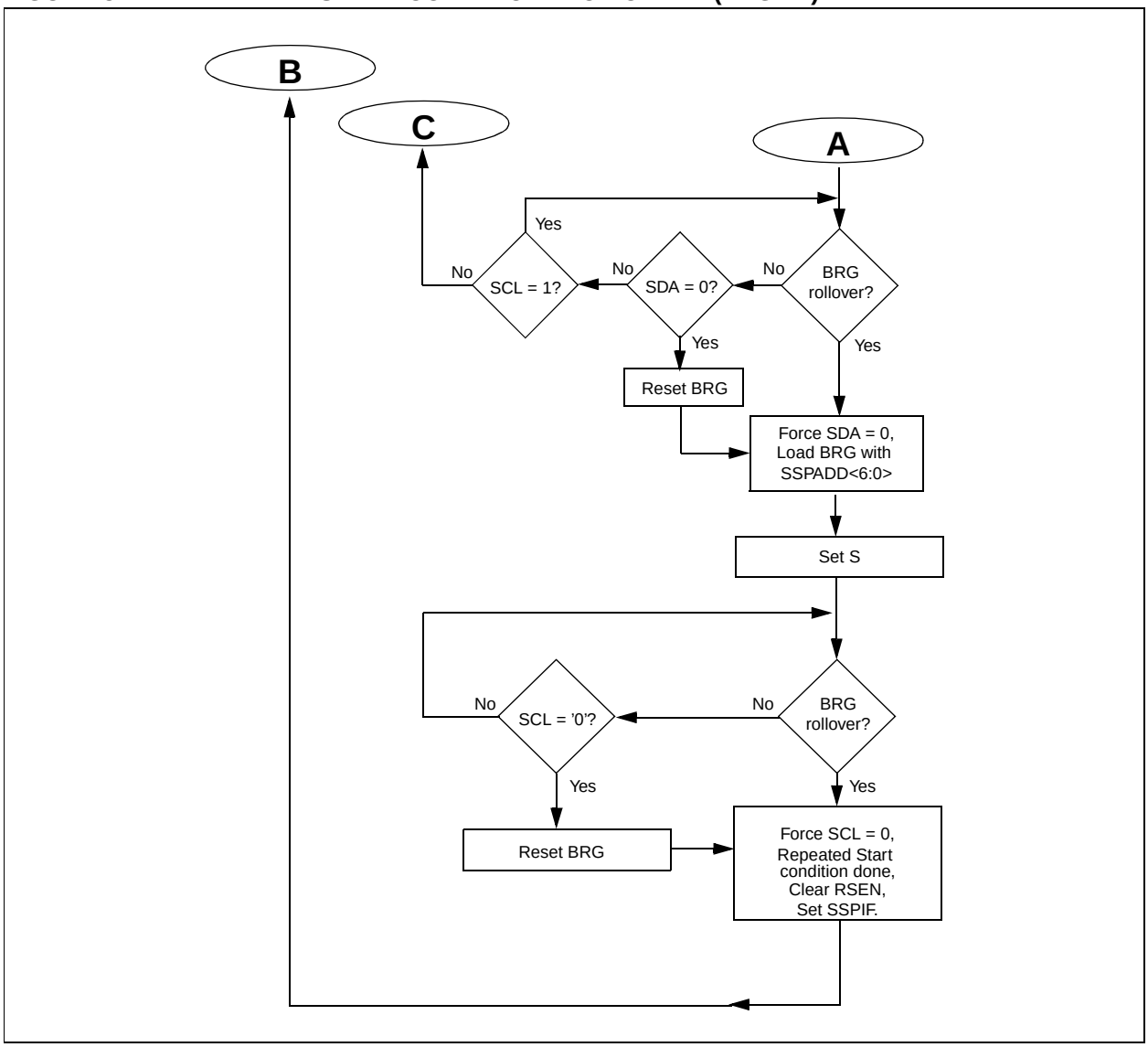

 © 1999 Microchip Technology Inc.

8.2.11 I^{2}C MASTER MODE TRANSMISSION

Transmission of a data byte, a 7-bit address, or either half of a 10-bit address is accomplished by simply writing a value to SSPBUF register. This action will set the buffer full flag (BF) and allow the baud rate generator to begin counting and start the next transmission. Each bit of address/data will be shifted out onto the SDA pin after the falling edge of SCL is asserted (see data hold time spec). SCL is held low for one baud rate generator roll over count (T_{BRG}). Data should be valid before SCL is released high (see Data setup time spec). When the SCL pin is released high, it is held that way for T_{BRG}, the data on the SDA pin must remain stable for that duration and some hold time after the next falling edge of SCL. After the eighth bit is shifted out (the falling edge of the eighth clock), the BF flag is cleared and the master releases SDA allowing the slave device being addressed to respond with an $\overline{ACK}$ bit during the ninth bit time, if an address match occurs or if data was received properly. The status of $\overline{ACK}$ is read into the AKDT on the falling edge of the ninth clock. If the master receives an acknowledge, the acknowledge status bit (AKSTAT) is cleared. If not, the bit is set. After the ninth clock the SSPIF is set, and the master clock (baud rate generator) is suspended until the next data byte is loaded into the SSPBUF leaving SCL low and SDA unchanged (Figure 8-26).

After the write to the SSPBUF, each bit of address will be shifted out on the falling edge of SCL until all seven address bits and the R/$\overline{W}$ bit are completed. On the falling edge of the eighth clock the master will de-assert the SDA pin allowing the slave to respond with an acknowledge. On the falling edge of the ninth clock the master will sample the SDA pin to see if the address was recognized by a slave. The status of the ACK bit is loaded into the AKSTAT status bit (SSPCON2<6>). Following the falling edge of the ninth clock transmission of the address, the SSPIF is set, the BF flag is cleared, and the baud rate generator is turned off until another write to the SSPBUF takes place, holding SCL low and allowing SDA to float.

8.2.11.7 BF STATUS FLAG

In transmit mode, the BF bit (SSPSTAT<0>) is set when the CPU writes to SSPBUF and is cleared when all 8 bits are shifted out.

8.2.11.8 WCOL STATUS FLAG

If the user writes the SSPBUF when a transmit is already in progress (i.e. SSPSR is still shifting out a data byte), then WCOL is set and the contents of the buffer are unchanged (the write doesn't occur).

WCOL must be cleared in software.

8.2.11.9 AKSTAT STATUS FLAG

In transmit mode, the AKSTAT bit (SSPCON2<6>) is cleared when the slave has sent an acknowledge ($\overline{ACK}$ = 0), and is set when the slave does not acknowledge ($\overline{ACK}$ = 1). A slave sends an acknowledge when it has recognized its address (including a general call), or when the slave has properly received its data.

FIGURE 8-25: MASTER TRANSMIT FLOWCHART

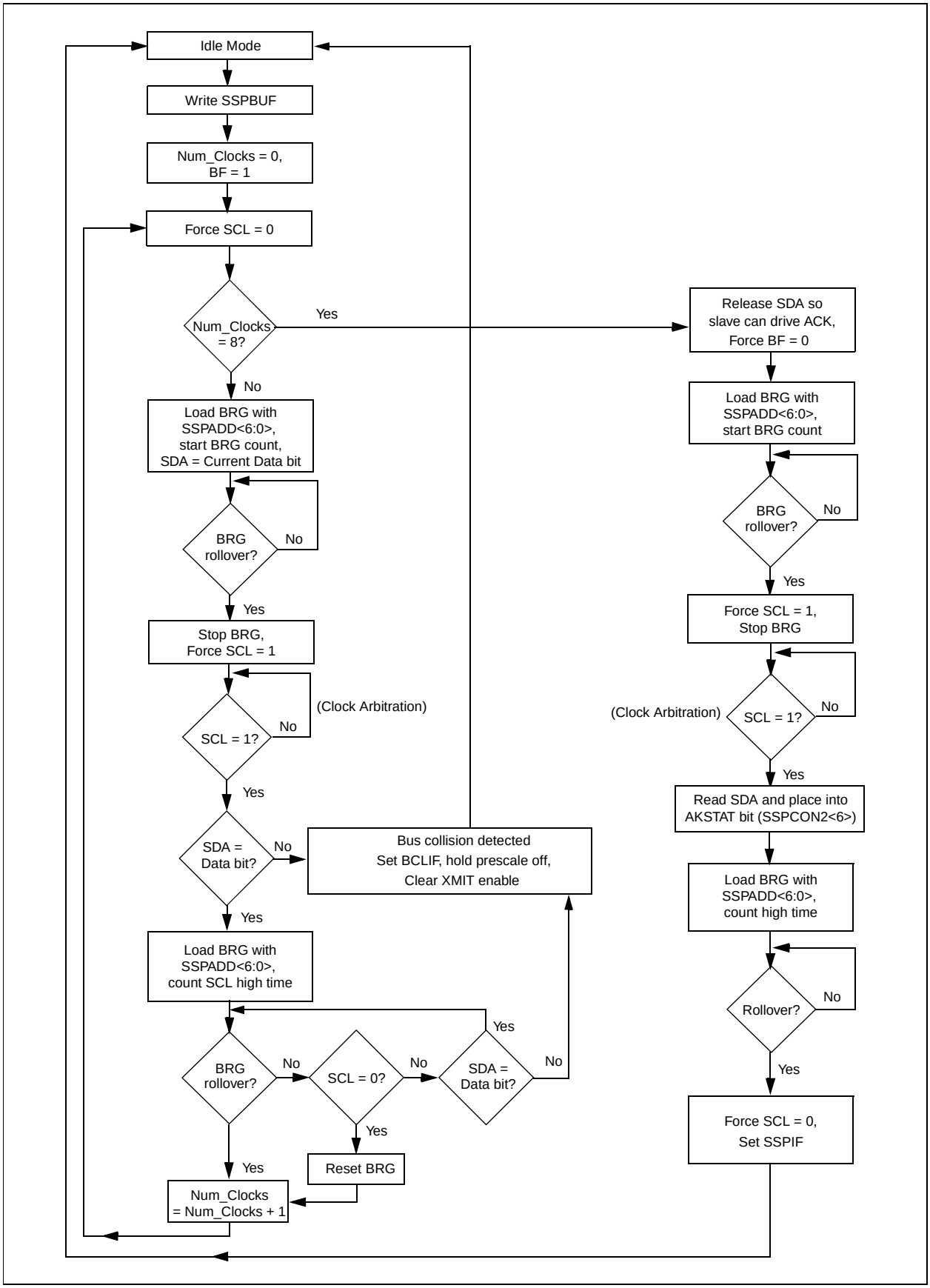

 © 1999 Microchip Technology Inc.

FIGURE 8-26: I²C MASTER MODE TIMING (TRANSMISSION, 7 OR 10-BIT ADDRESS)

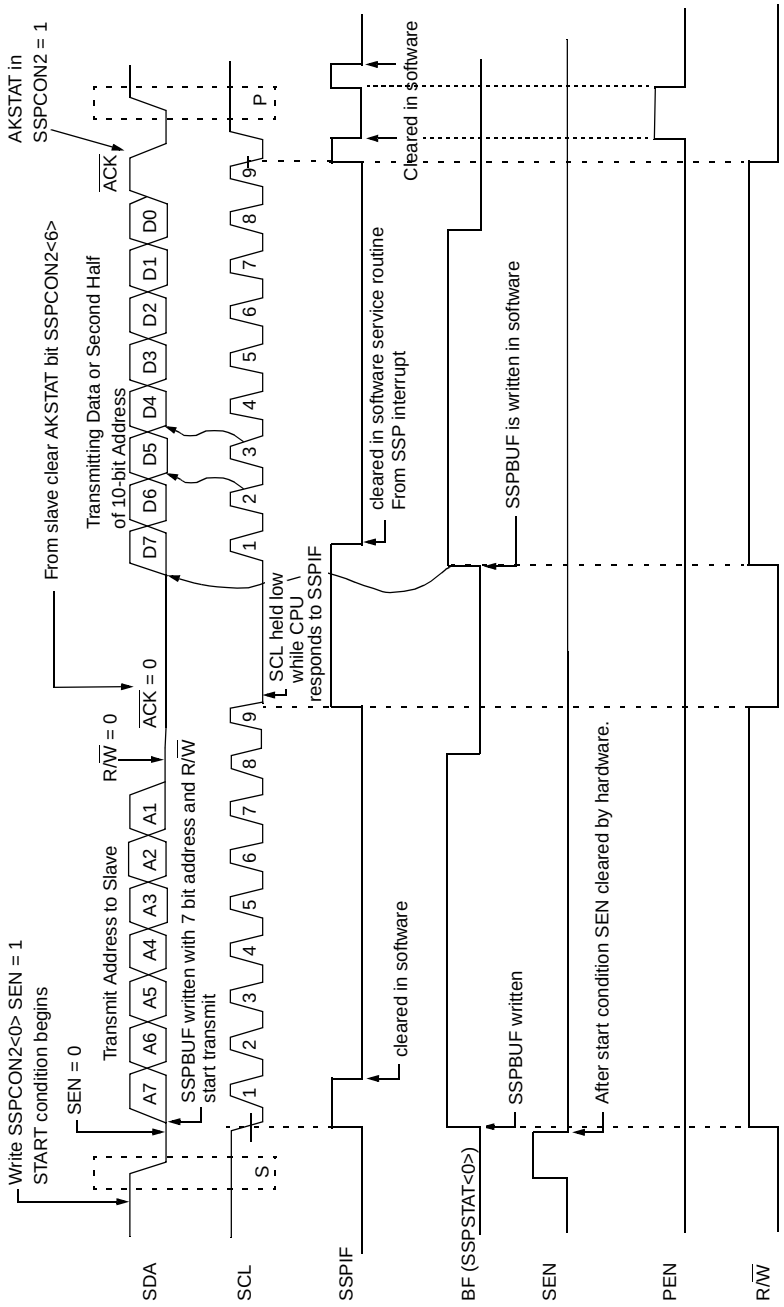

8.2.12 I^{2}C MASTER MODE RECEPTION

Master mode reception is enabled by programming the receive enable bit, RCEN (SSPCON2<3>).

Note:	The SSP Module must be in an IDLE STATE before the RCEN bit is set, or the RCEN bit will be disregarded.

The baud rate generator begins counting, and on each rollover, the state of the SCL pin changes (high to low/low to high) and data is shifted into the SSPSR. After the falling edge of the eighth clock, the receive enable flag is automatically cleared, the contents of the SSPSR are loaded into the SSPBUF, the BF flag is set, the SSPIF is set, and the baud rate generator is suspended from counting, holding SCL low. The SSP is now in IDLE state, awaiting the next command. When the buffer is read by the CPU, the BF flag is automatically cleared. The user can then send an acknowledge bit at the end of reception, by setting the acknowledge sequence enable bit, AKEN (SSPCON2<4>).

8.2.12.10 BF STATUS FLAG

In receive operation, BF is set when an address or data byte is loaded into SSPBUF from SSPSR. It is cleared when SSPBUF is read.

8.2.12.11 SSPOV STATUS FLAG

In receive operation, SSPOV is set when 8 bits are received into the SSPSR, and the BF flag is already set from a previous reception.

8.2.12.12 WCOL STATUS FLAG

If the user writes the SSPBUF when a receive is already in progress (i.e. SSPSR is still shifting in a data byte), then WCOL is set and the contents of the buffer are unchanged (the write doesn't occur).

 © 1999 Microchip Technology Inc.

FIGURE 8-27: MASTER RECEIVER FLOWCHART

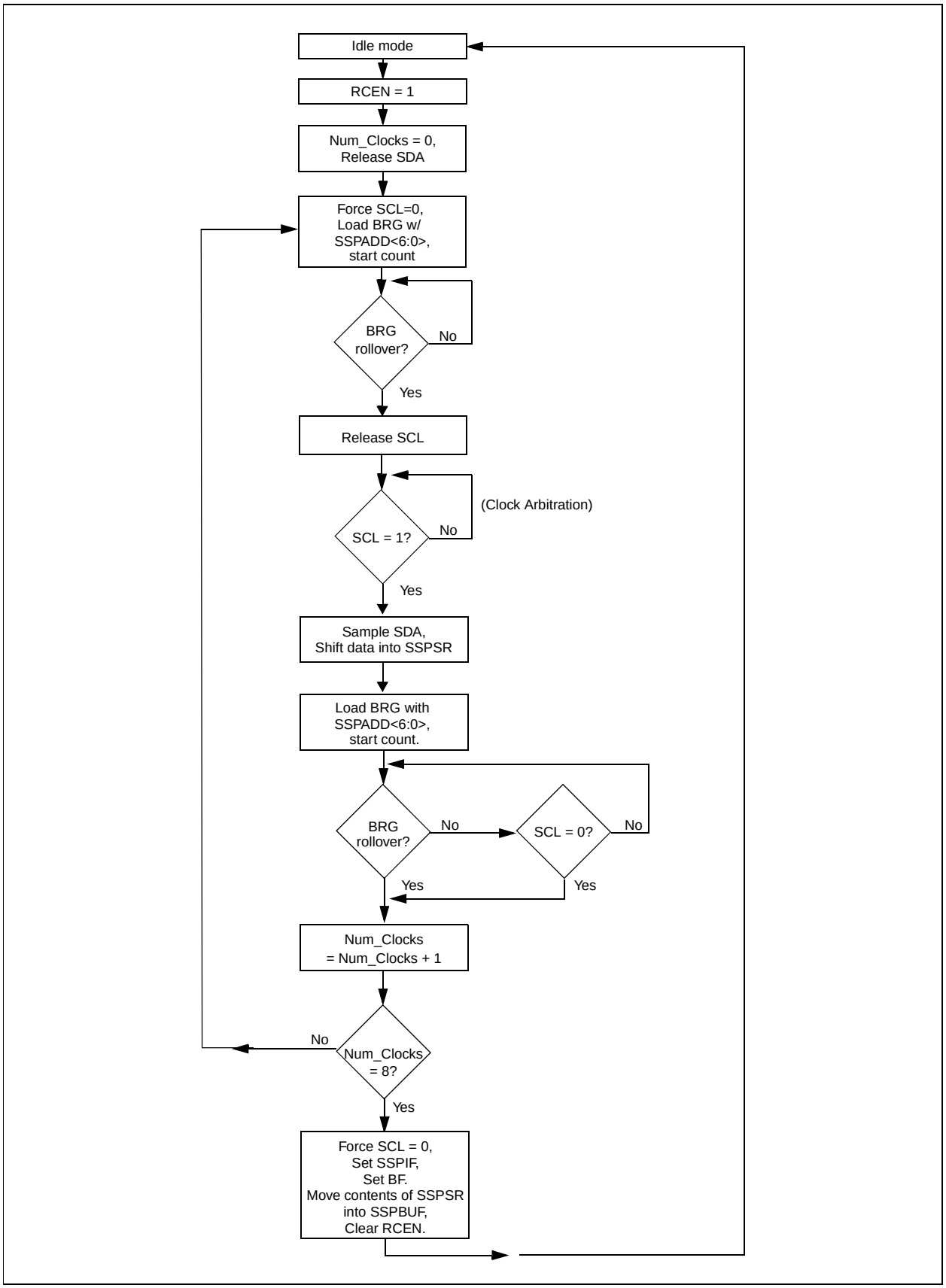

FIGURE 8-28: I²C MASTER MODE TIMING (RECEPTION 7-BIT ADDRESS)

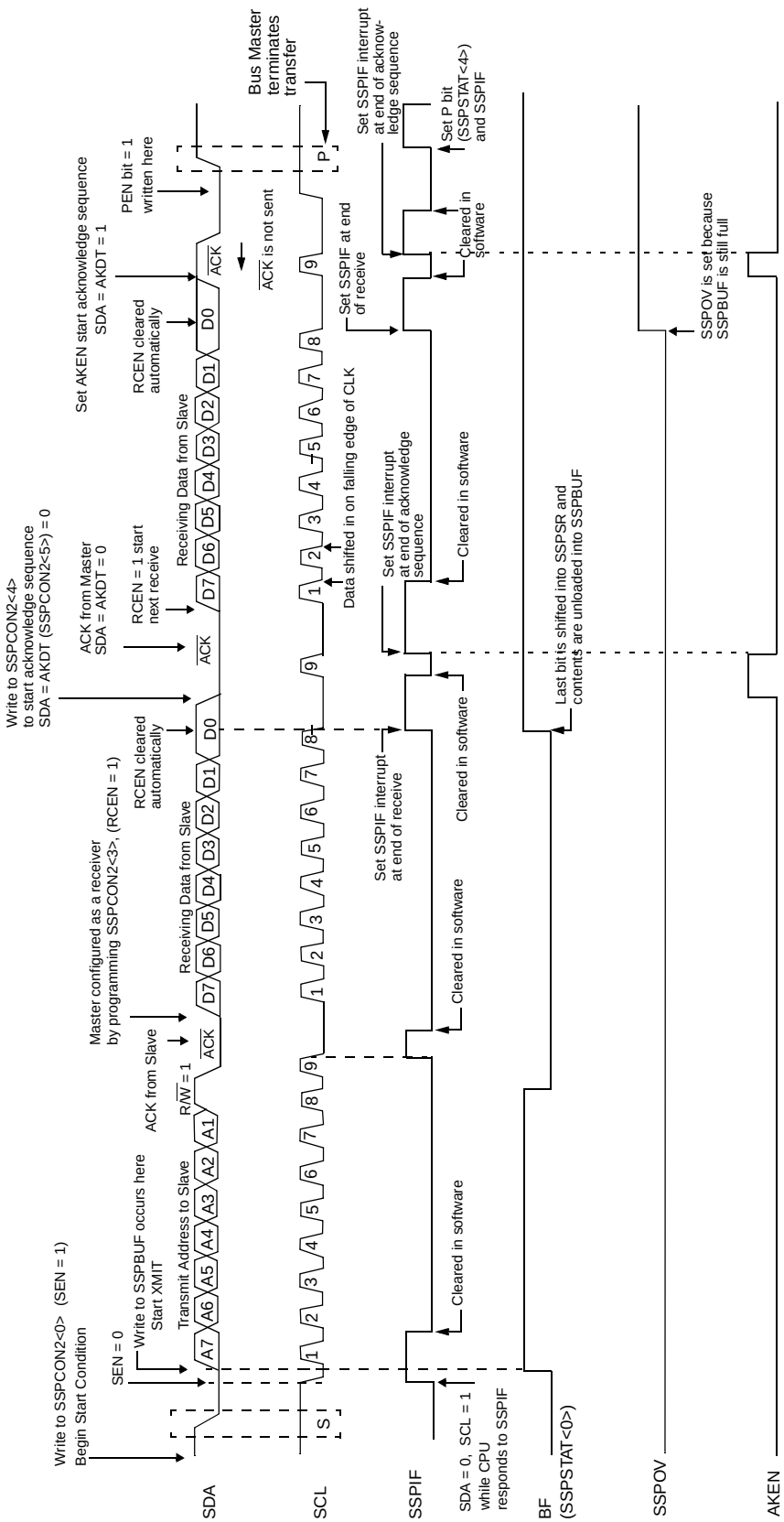

 © 1999 Microchip Technology Inc.

8.2.13 ACKNOWLEDGE SEQUENCE TIMING

An acknowledge sequence is enabled by setting the acknowledge sequence enable bit, AKEN (SSPCON2<4>). When this bit is set, the SCL pin is pulled low and the contents of the acknowledge data bit is presented on the SDA pin. If the user wishes to generate an acknowledge, then the AKDT bit should be cleared. If not, the user should set the AKDT bit before starting an acknowledge sequence. The baud rate generator then counts for one rollover period (T_{BRG}), and the SCL pin is de-asserted (pulled high). When the SCL pin is sampled high (clock arbitration), the baud rate generator counts for T_{BRG} . The SCL pin is then pulled low. Following this, the AKEN bit is automatically cleared, the baud rate generator is turned off, and the SSP module then goes into IDLE mode. (Figure 8-29)

8.2.13.13 WCOL STATUS FLAG

If the user writes the SSPBUF when an acknowledege sequence is in progress, then WCOL is set and the contents of the buffer are unchanged (the write doesn't occur).

FIGURE 8-29: ACKNOWLEDGE SEQUENCE WAVEFORM

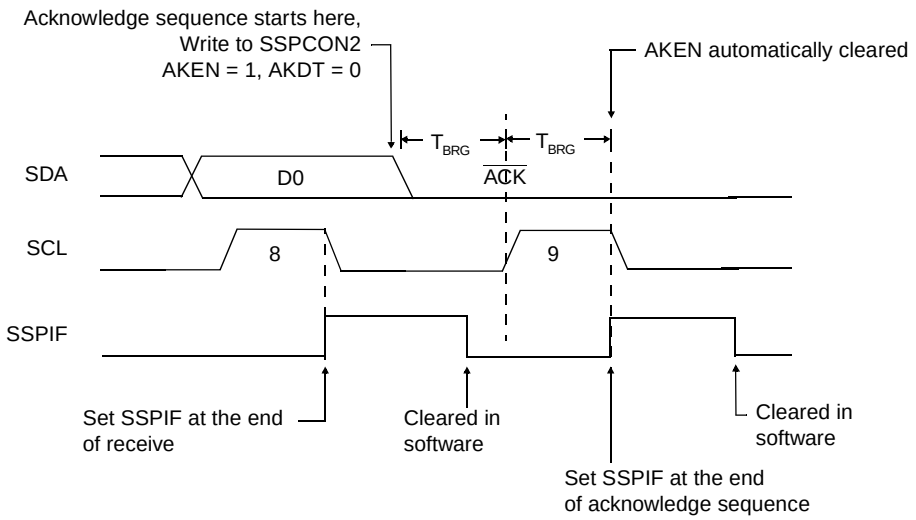

Note: T_{BRG}= one baud rate generator period.

FIGURE 8-30: ACKNOWLEDGE FLOWCHART

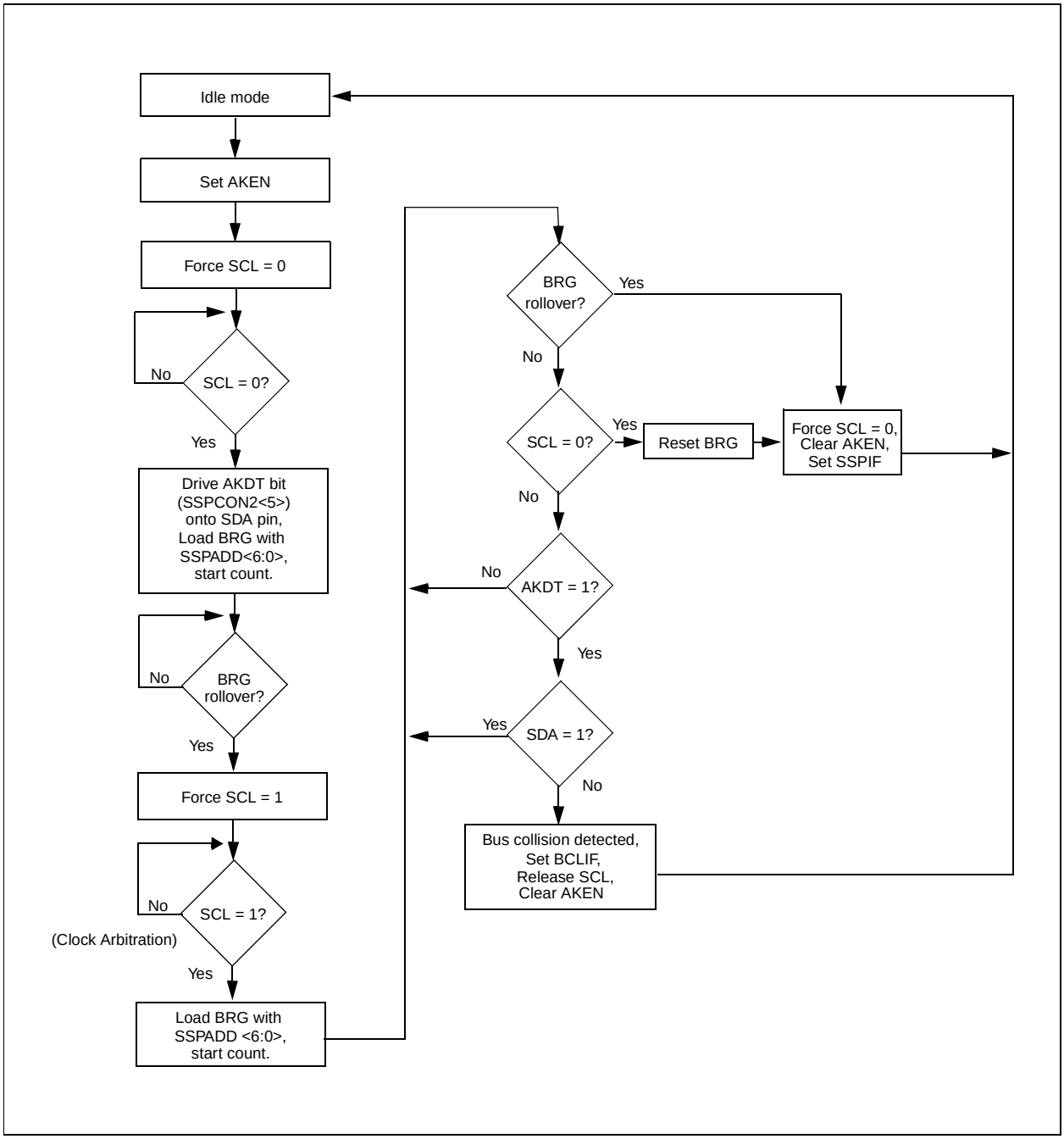

 © 1999 Microchip Technology Inc.

8.2.14 STOP CONDITION TIMING

A stop bit is asserted on the SDA pin at the end of a receive/transmit by setting the Stop Sequence Enable bit PEN (SSPCON2<2>). At the end of a receive/transmit the SCL line is held low after the falling edge of the ninth clock. When the PEN bit is set, the master will assert the SDA line low . When the SDA line is sampled low, the baud rate generator is reloaded and counts down to 0. When the baud rate generator times out, the SCL pin will be brought high, and one T_{BRG} (baud rate generator rollover count) later, the SDA pin will be de-asserted. When the SDA pin is sampled high while SCL is high, the P bit (SSPSTAT<4>) is set. A T_{BRG} later the PEN bit is cleared and the SSPIF bit is set (Figure 8-31).

Whenever the firmware decides to take control of the bus, it will first determine if the bus is busy by checking the S and P bits in the SSPSTAT register. If the bus is busy, then the CPU can be interrupted (notified) when a Stop bit is detected (i.e. bus is free).

8.2.14.14 WCOL STATUS FLAG

If the user writes the SSPBUF when a STOP sequence is in progress, then WCOL is set and the contents of the buffer are unchanged (the write doesn't occur).

FIGURE 8-31: STOP CONDITION RECEIVE OR TRANSMIT MODE

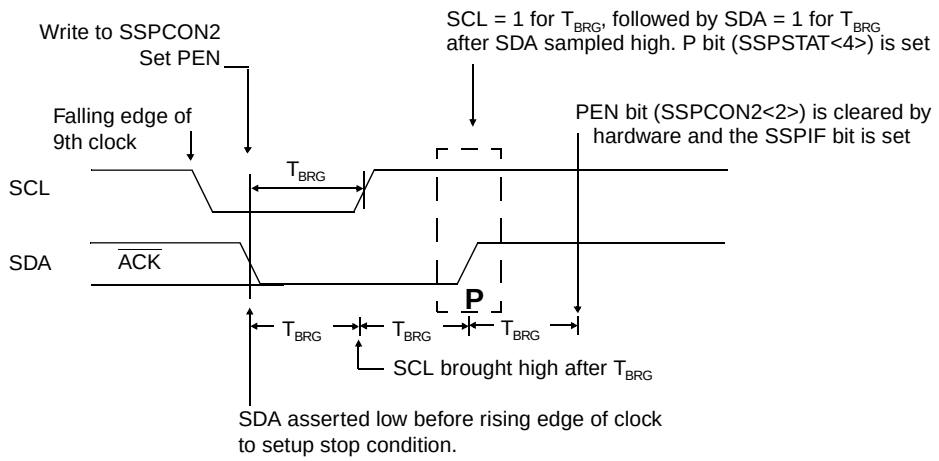

Note: T_{BRG} = one baud rate generator period.

FIGURE 8-32: STOP CONDITION FLOWCHART

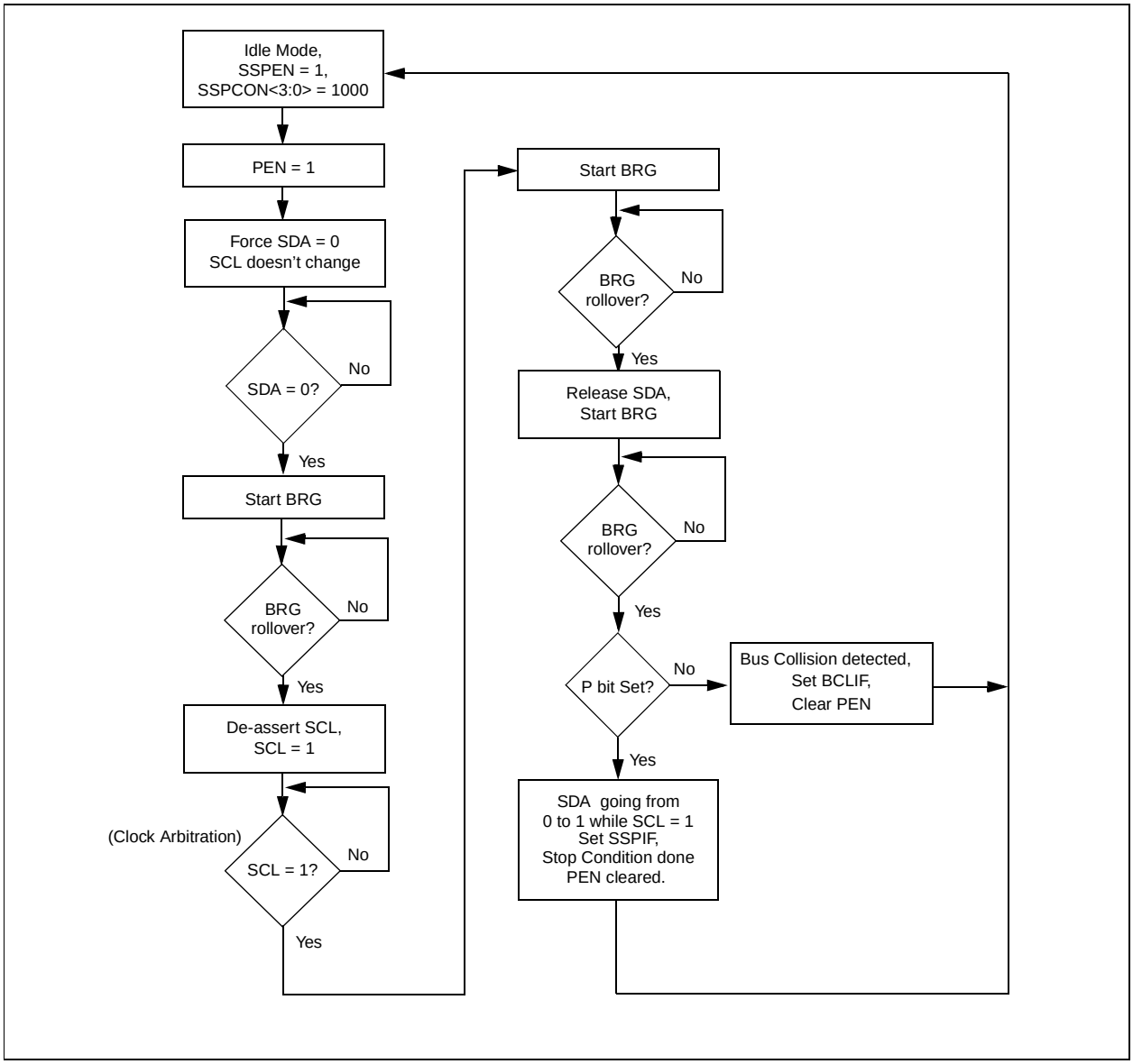

 © 1999 Microchip Technology Inc.

8.2.15 CLOCK ARBITRATION

Clock arbitration occurs when the master, during any receive, transmit, or repeated start/stop condition, de-asserts the SCL pin (SCL allowed to float high). When the SCL pin is allowed to float high, the baud rate generator (BRG) is suspended from counting until the SCL pin is actually sampled high. When the SCL pin is sampled high, the baud rate generator is reloaded with the contents of SSPADD<6:0> and begins counting. This ensures that the SCL high time will always be at least one BRG rollover count in the event that the clock is held low by an external device (Figure 8-33).

8.2.16 SLEEP OPERATION

While in sleep mode, the I^2C module can receive addresses or data, and when an address match or complete byte transfer occurs wake the processor from sleep (if the SSP interrupt is enabled).

8.2.17 EFFECTS OF A RESET

A reset disables the SSP module and terminates the current transfer.

FIGURE 8-33: CLOCK ARBITRATION TIMING IN MASTER TRANSMIT MODE

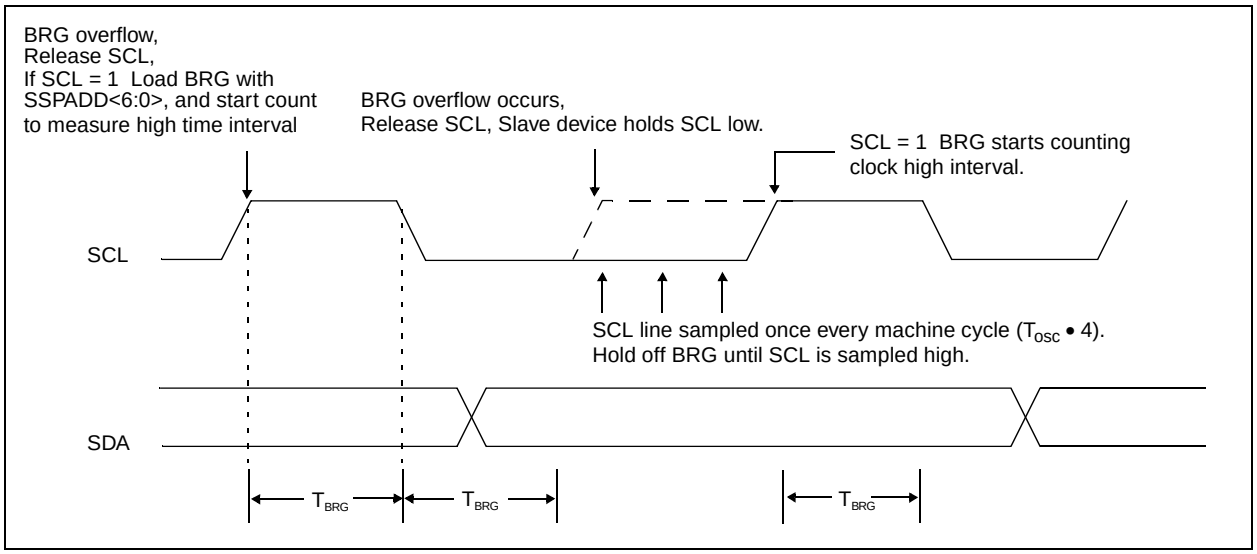

8.2.18 MULTI -MASTER COMMUNICATION, BUS COLLISION, AND BUS ARBITRATION

Multi-Master mode support is achieved by bus arbitration. When the master outputs address/data bits onto the SDA pin, arbitration takes place when the master outputs a '1' on SDA by letting SDA float high and another master asserts a '0'. When the SCL pin floats high, data should be stable. If the expected data on SDA is a '1' and the data sampled on the SDA pin = '0', then a bus collision has taken place. The master will set the Bus Collision Interrupt Flag, BCLIF and reset the I^2C port to its IDLE state. (Figure 8-34).

If a transmit was in progress when the bus collision occurred, the transmission is halted, the BF flag is cleared, the SDA and SCL lines are de-asserted, and the SSPBUF can be written to. When the user services the bus collision interrupt service routine, and if the I^2C bus is free, the user can resume communication by asserting a START condition.

If a START, Repeated Start, STOP, or Acknowledge condition was in progress when the bus collision occurred, the condition is aborted, the SDA and SCL lines are de-asserted, and the respective control bits in the SSPCON2 register are cleared. When the user services the bus collision interrupt service routine, and if the I^2C bus is free, the user can resume communication by asserting a START condition.

The Master will continue to monitor the SDA and SCL pins, and if a STOP condition occurs, the SSPIF bit will be set.

A write to the SSPBUF will start the transmission of data at the first data bit, regardless of where the transmitter left off when bus collision occurred.

In multi-master mode, the interrupt generation on the detection of start and stop conditions allows the determination of when the bus is free. Control of the I^2C bus can be taken when the P bit is set in the SSPSTAT register, or the bus is idle and the S and P bits are cleared.

FIGURE 8-34: BUS COLLISION TIMING FOR TRANSMIT AND ACKNOWLEDGE

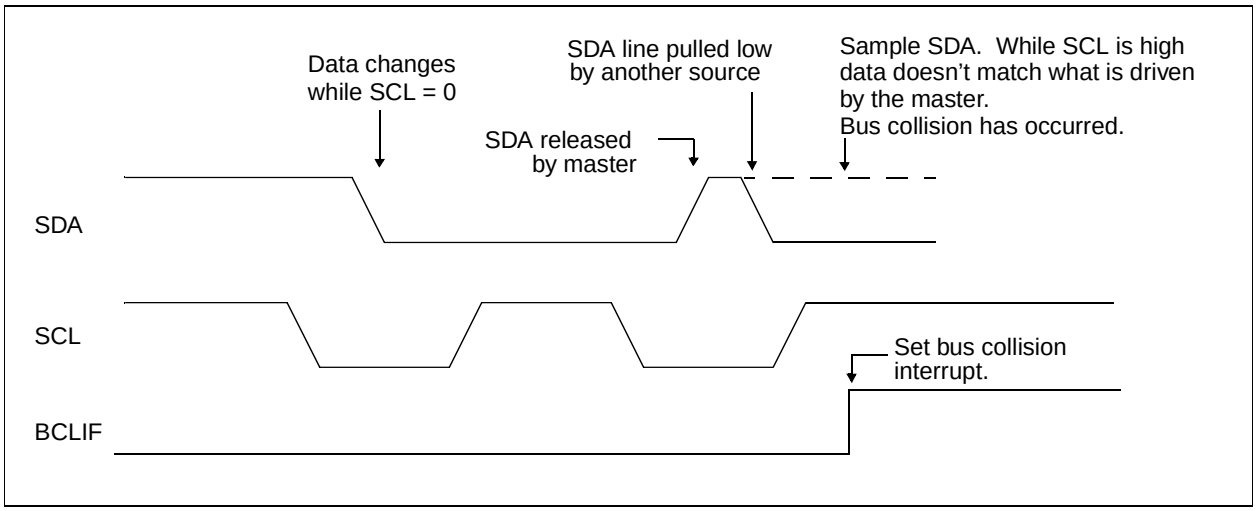

 © 1999 Microchip Technology Inc.

8.2.18.15 BUS COLLISION DURING A START CONDITION

During a START condition, a bus collision occurs if:

a) SDA or SCL are sampled low at the beginning of the START condition (Figure 8-35).

b) SCL is sampled low before SDA is asserted low. (Figure 8-36).

During a START condition both the SDA and the SCL pins are monitored.

If:

the SDA pin is already low
or the SCL pin is already low,

then:

the START condition is aborted,
and the BCLIF flag is set,
and the SSP module is reset to its IDLE state (Figure 8-35).

The START condition begins with the SDA and SCL pins de-asserted. When the SDA pin is sampled high, the baud rate generator is loaded from SSPADD<6:0> and counts down to 0. If the SCL pin is sampled low while SDA is high, a bus collision occurs, because it is assumed that another master is attempting to drive a data '1' during the START condition.

If the SDA pin is sampled low during this count, the BRG is reset and the SDA line is asserted early (Figure 8-37). If however a '1' is sampled on the SDA pin, the SDA pin is asserted low at the end of the BRG count. The baud rate generator is then reloaded and counts down to 0, and during this time, if the SCL pins is sampled as '0', a bus collision does not occur. At the end of the BRG count the SCL pin is asserted low.

> **Note:** The reason that bus collision is not a factor during a START condition is that no two bus masters can assert a START condition at the exact same time. Therefore, one master will always assert SDA before the other. This condition does not cause a bus collision because the two masters must be allowed to arbitrate the first address following the START condition, and if the address is the same, arbitration must be allowed to continue into the data portion, REPEATED START, or STOP conditions.

FIGURE 8-35: BUS COLLISION DURING START CONDITION (SDA ONLY)

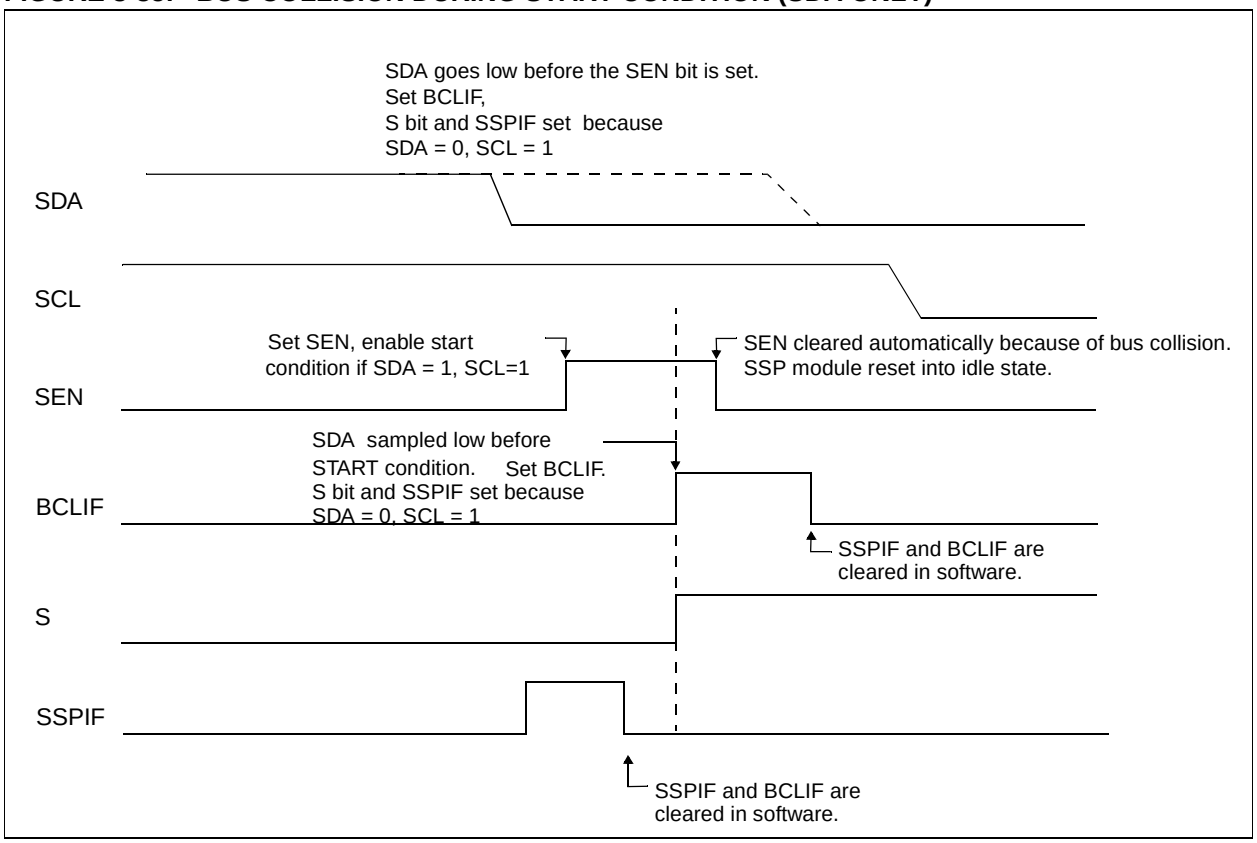

FIGURE 8-36: BUS COLLISION DURING START CONDITION (SCL = 0)

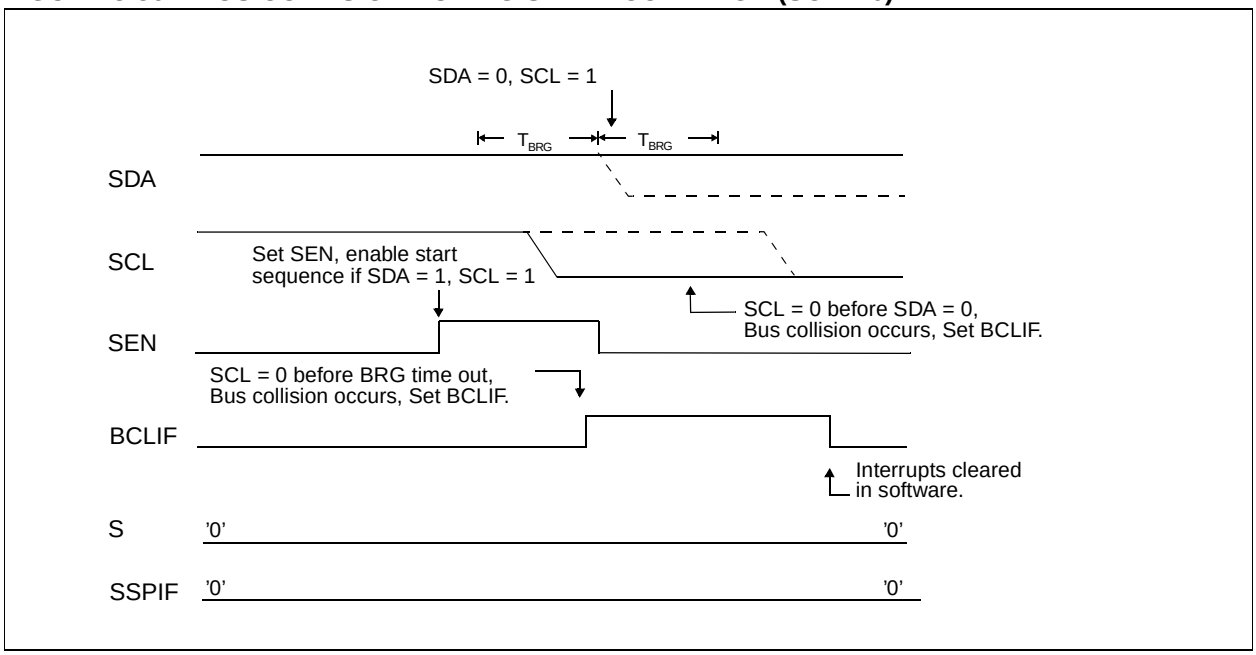

FIGURE 8-37: BRG RESET DUE TO SDA COLLISION DURING START CONDITION

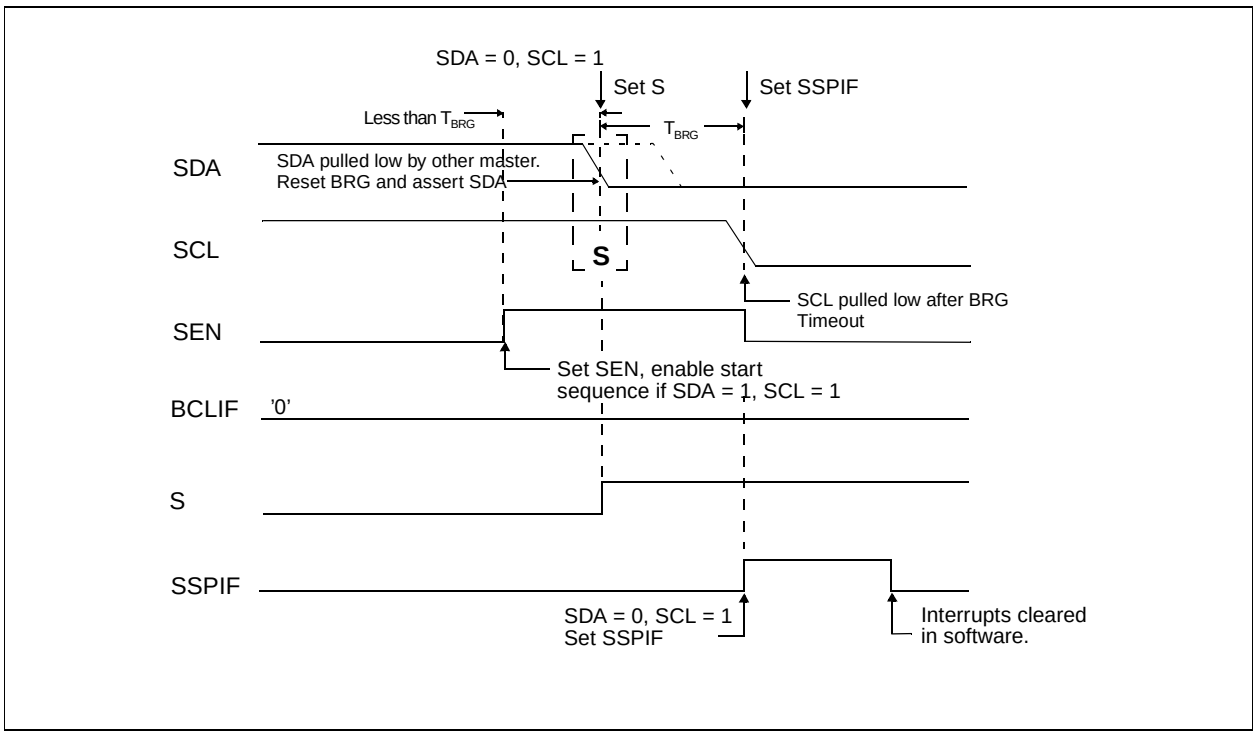

 © 1999 Microchip Technology Inc.

8.2.18.16 BUS COLLISION DURING A REPEATED START CONDITION

During a Repeated Start condition, a bus collision occurs if:

a) A low level is sampled on SDA when SCL goes from low level to high level.

b) SCL goes low before SDA is asserted low, indicating that another master is attempting to transmit a data '1'.

When the user de-asserts SDA and the pin is allowed to float high, the BRG is loaded with SSPADD<6:0>, and counts down to 0. The SCL pin is then de-asserted, and when sampled high, the SDA pin is sampled. If SDA is low, a bus collision has occurred (i.e. another master is attempting to transmit a data '0'). If however SDA is sampled high then the BRG is reloaded and begins counting. If SDA goes from high to low before the BRG times out, no bus collision occurs, because no two masters can assert SDA at exactly the same time.

If, however, SCL goes from high to low before the BRG times out and SDA has not already been asserted, then a bus collision occurs. In this case, another master is attempting to transmit a data '1' during the Repeated Start condition.

If at the end of the BRG time out both SCL and SDA are still high, the SDA pin is driven low, the BRG is reloaded, and begins counting. At the end of the count, regardless of the status of the SCL pin, the SCL pin is driven low and the Repeated Start condition is complete (Figure 8-38).

FIGURE 8-38: BUS COLLISION DURING A REPEATED START CONDITION (CASE 1)

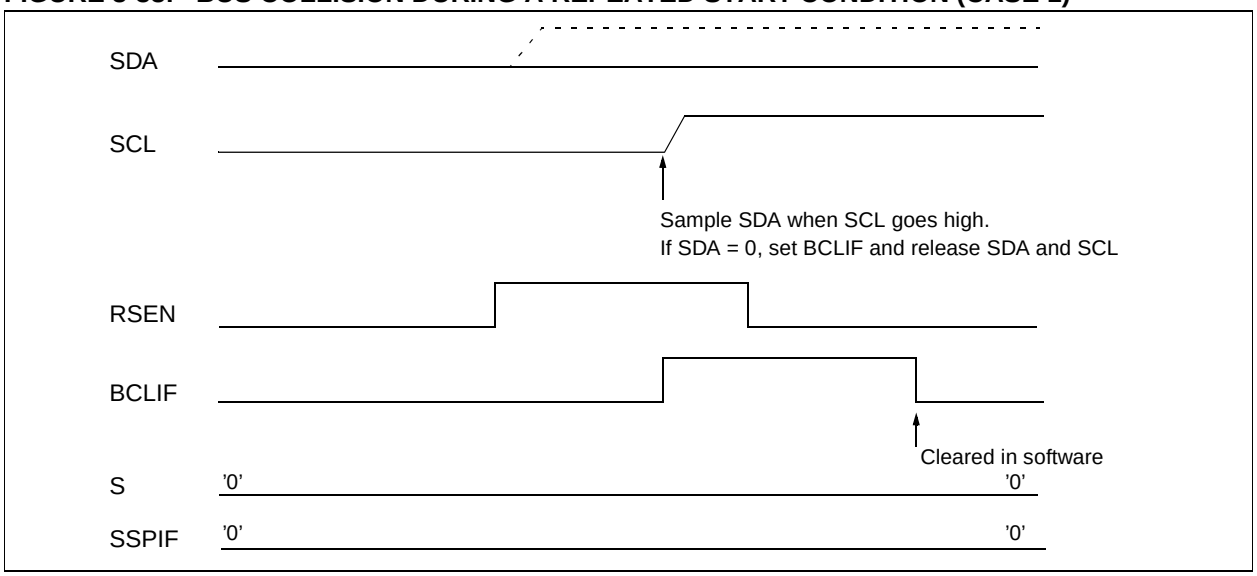

FIGURE 8-39: BUS COLLISION DURING REPEATED START CONDITION (CASE 2)

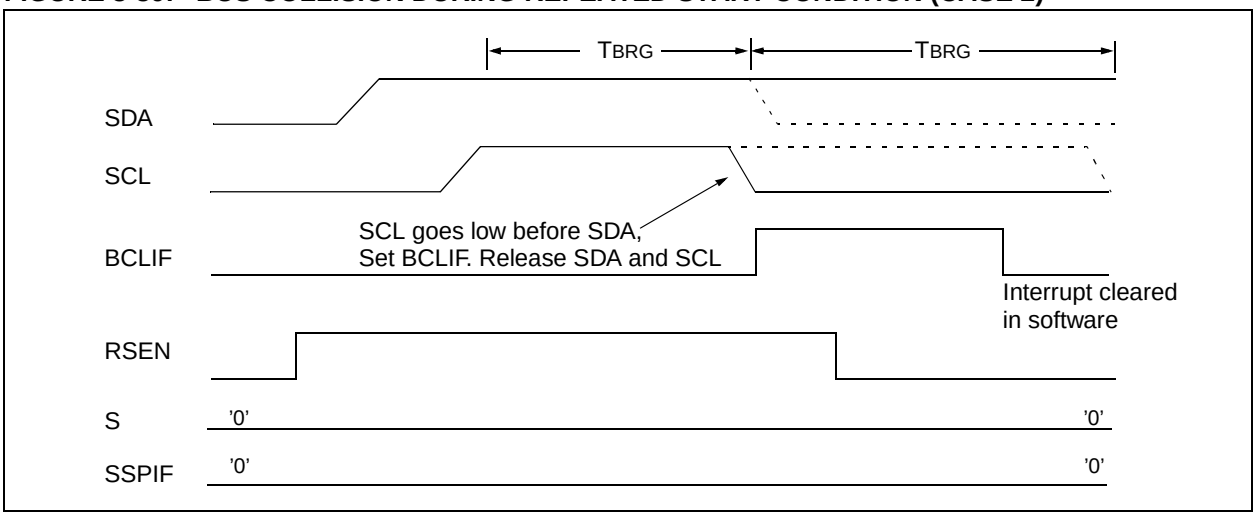

8.2.18.17 BUS COLLISION DURING A STOP CONDITION

Bus collision occurs during a STOP condition if:

a) After the SDA pin has been de-asserted and allowed to float high, SDA is sampled low after the BRG has timed out.

b) After the SCL pin is de-asserted, SCL is sampled low before SDA goes high.

The STOP condition begins with SDA asserted low. When SDA is sampled low, the SCL pin is allow to float. When the pin is sampled high (clock arbitration), the baud rate generator is loaded with SSPADD<6:0> and counts down to 0. After the BRG times out SDA is sampled. If SDA is sampled low, a bus collision has occurred. This is due to another master attempting to drive a data '0'. If the SCL pin is sampled low before SDA is allowed to float high, a bus collision occurs. This is another case of another master attempting to drive a data '0' (Figure 8-40).

FIGURE 8-40: BUS COLLISION DURING A STOP CONDITION (CASE 1)

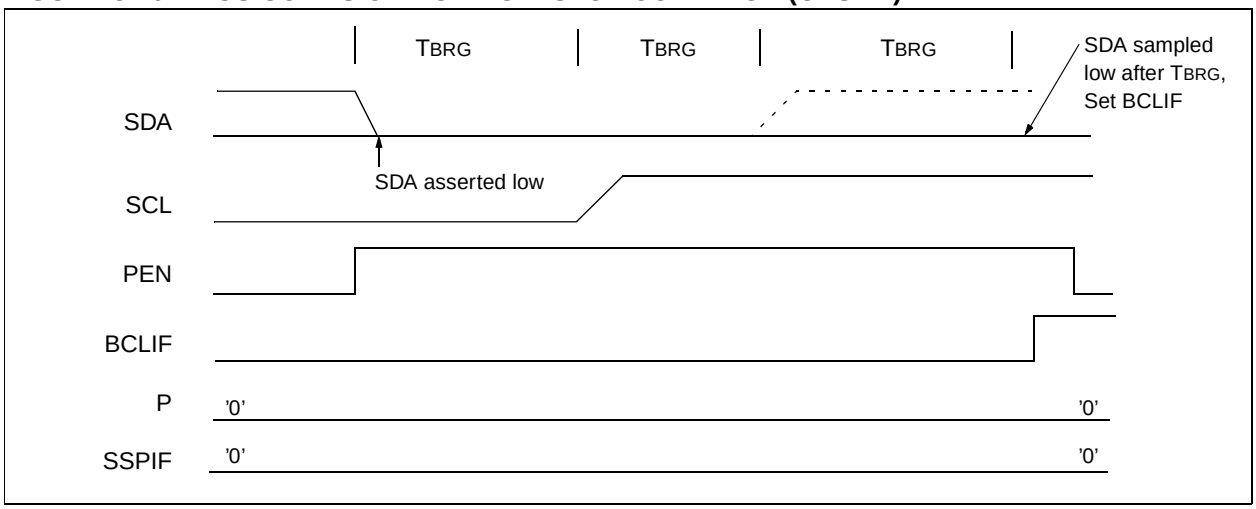

FIGURE 8-41: BUS COLLISION DURING A STOP CONDITION (CASE 2)

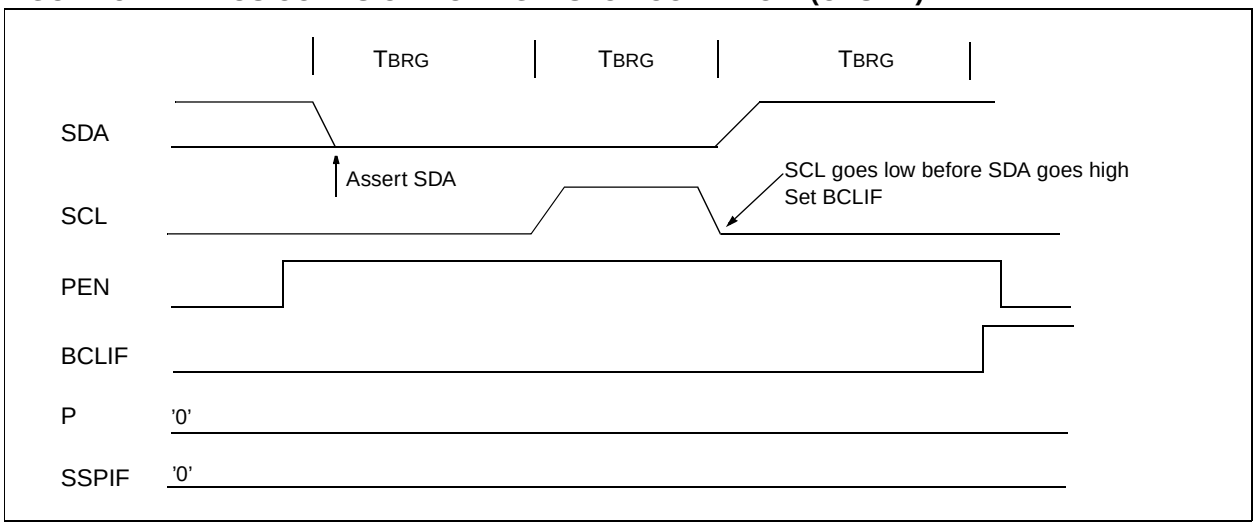

 © 1999 Microchip Technology Inc.

8.3 Connection Considerations for I²C Bus

For standard-mode I²C bus devices, the values of resistors R_p R_s in Figure 8-42 depends on the following parameters

- Supply voltage
- Bus capacitance
- Number of connected devices (input current + leakage current).

The supply voltage limits the minimum value of resistor R_p due to the specified minimum sink current of 3 mA at VOL max = 0.4V for the specified output stages. For example, with a supply voltage of VDD = 5V±10% and VOL max = 0.4V at 3 mA, $R_{p\ min}$ = (5.5-0.4)/0.003 = 1.7 kΩ. VDD as a function of R_p is shown in Figure 8-42. The desired noise margin of 0.1VDD for the low level limits the maximum value of R_s. Series resistors are optional and used to improve ESD susceptibility.

The bus capacitance is the total capacitance of wire, connections, and pins. This capacitance limits the maximum value of R_p due to the specified rise time (Figure 8-42).

The SMP bit is the slew rate control enabled bit. This bit is in the SSPSTAT register, and controls the slew rate of the I/O pins when in I²C mode (master or slave).

FIGURE 8-42: SAMPLE DEVICE CONFIGURATION FOR I²C BUS

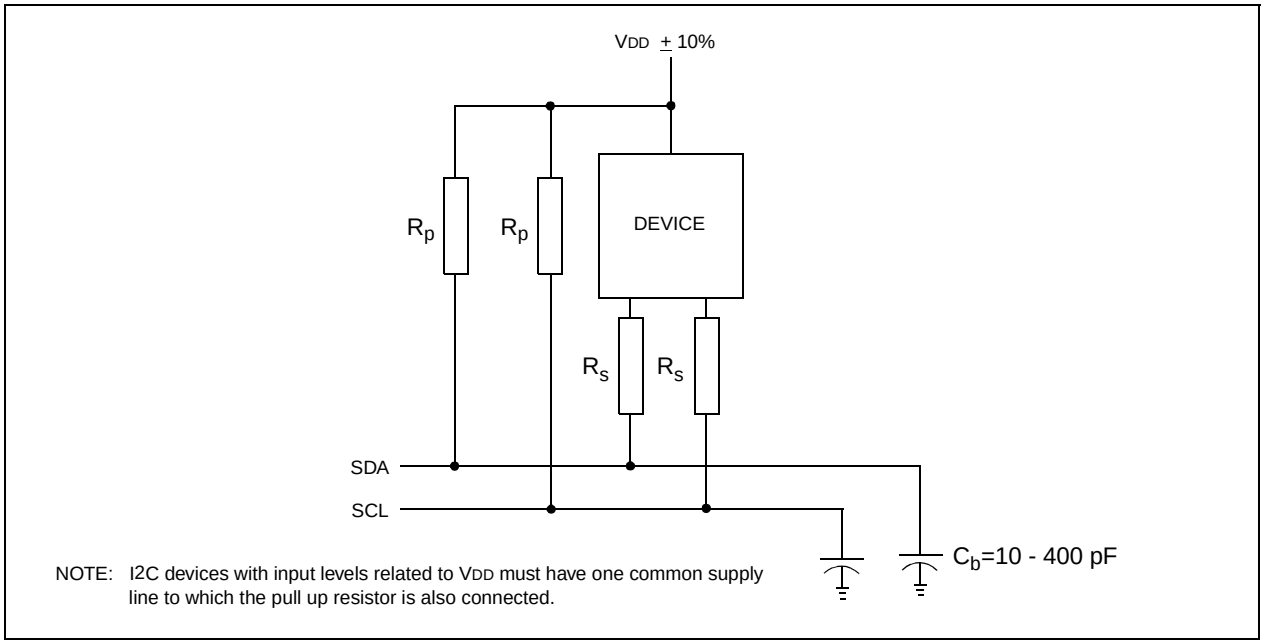

NOTES:

 © 1999 Microchip Technology Inc.

9.0 ADDRESSABLE UNIVERSAL SYNCHRONOUS ASYNCHRONOUS RECEIVER TRANSMITTER (USART)

The Universal Synchronous Asynchronous Receiver Transmitter (USART) module is one of the two serial I/O modules. (USART is also known as a Serial Communications Interface or SCI). The USART can be configured as a full duplex asynchronous system that can communicate with peripheral devices such as CRT terminals and personal computers, or it can be configured as a half duplex synchronous system that can communicate with peripheral devices such as A/D or D/A integrated circuits, Serial EEPROMs etc.

The USART can be configured in the following modes:

- Asynchronous (full duplex)
- Synchronous - Master (half duplex)
- Synchronous - Slave (half duplex)

Bit SPEN (RCSTA<7>), and bits TRISC<7:6>, have to be set in order to configure pins RC6/TX/CK and RC7/RX/DT as the Universal Synchronous Asynchronous Receiver Transmitter.

The USART module also has a multi-processor communication capability using 9-bit address detection.

FIGURE 9-1: TXSTA: TRANSMIT STATUS AND CONTROL REGISTER (ADDRESS 98h)

R/W-0	R/W-0	R/W-0	R/W-0	U-0	R/W-0	R-1	R/W-0
CSRC	TX9	TXEN	SYNC	—	BRGH	TRMT	TX9D
bit7							bit0

R = Readable bit
W = Writable bit
U = Unimplemented bit, read as ‘0’
- n =Value at POR reset

bit 7: **CSRC**: Clock Source Select bit

Asynchronous mode
Don’t care

Synchronous mode
1 = Master mode (Clock generated internally from BRG)
0 = Slave mode (Clock from external source)

bit 6: **TX9**: 9-bit Transmit Enable bit
1 = Selects 9-bit transmission
0 = Selects 8-bit transmission

bit 5: **TXEN**: Transmit Enable bit
1 = Transmit enabled
0 = Transmit disabled
Note: SREN/CREN overrides TXEN in SYNC mode.

bit 4: **SYNC**: USART Mode Select bit
1 = Synchronous mode
0 = Asynchronous mode

bit 3: **Unimplemented:** Read as '0'

bit 2: **BRGH**: High Baud Rate Select bit

Asynchronous mode
1 = High speed
0 = Low speed

Synchronous mode
Unused in this mode

bit 1: **TRMT**: Transmit Shift Register Status bit
1 = TSR empty
0 = TSR full

bit 0: **TX9D**: 9th bit of transmit data. Can be parity bit.

FIGURE 9-2: RCSTA: RECEIVE STATUS AND CONTROL REGISTER (ADDRESS 18h)

R/W-0	R/W-0	R/W-0	R/W-0	R/W-0	R-0	R-0	R-x
SPEN	RX9	SREN	CREN	ADDEN	FERR	OERR	RX9D
bit7							bit0

R = Readable bit
W = Writable bit
U = Unimplemented bit, read as ‘0’
- n =Value at POR reset

bit 7: **SPEN**: Serial Port Enable bit
1 = Serial port enabled (Configures RC7/RX/DT and RC6/TX/CK pins as serial port pins)
0 = Serial port disabled

bit 6: **RX9**: 9-bit Receive Enable bit
1 = Selects 9-bit reception
0 = Selects 8-bit reception

bit 5: **SREN**: Single Receive Enable bit

Asynchronous mode
Don’t care

Synchronous mode - master
1 = Enables single receive
0 = Disables single receive
This bit is cleared after reception is complete.

Synchronous mode - slave
Unused in this mode

bit 4: **CREN**: Continuous Receive Enable bit

Asynchronous mode
1 = Enables continuous receive
0 = Disables continuous receive

Synchronous mode
1 = Enables continuous receive until enable bit CREN is cleared (CREN overrides SREN)
0 = Disables continuous receive

bit 3: **ADDEN:** Address Detect Enable bit
Asynchronous mode 9-bit (RX9 = 1)
1 = Enables address detection, enable interrupt and load of the receive buffer when RSR<8> is set
0 = Disables address detection, all bytes are received, and ninth bit can be used as parity bit

bit 2: **FERR**: Framing Error bit
1 = Framing error (Can be updated by reading RCREG register and receive next valid byte)
0 = No framing error

bit 1: **OERR**: Overrun Error bit
1 = Overrun error (Can be cleared by clearing bit CREN)
0 = No overrun error

bit 0: **RX9D**: 9th bit of received data (Can be parity bit)

 © 1999 Microchip Technology Inc.

9.1 USART Baud Rate Generator (BRG)

The BRG supports both the Asynchronous and Synchronous modes of the USART. It is a dedicated 8-bit baud rate generator. The SPBRG register controls the period of a free running 8-bit timer. In asynchronous mode bit BRGH (TXSTA<2>) also controls the baud rate. In synchronous mode bit BRGH is ignored. Table 9-1 shows the formula for computation of the baud rate for different USART modes which only apply in master mode (internal clock).

Given the desired baud rate and Fosc, the nearest integer value for the SPBRG register can be calculated using the formula in Table 9-1. From this, the error in baud rate can be determined.

Example 9-1 shows the calculation of the baud rate error for the following conditions:

FOSC = 16 MHz
Desired Baud Rate = 9600
BRGH = 0
SYNC = 0

EXAMPLE 9-1: CALCULATING BAUD RATE ERROR

Desired Baud rate = Fosc / (64 (X + 1))

$$9600 = 16000000 / (64 (X + 1))$$

$$X = \lfloor 25.042 \rfloor = 25$$

Calculated Baud Rate=16000000 / (64 (25 + 1))

$$= 9615$$

$$\text{Error} = \frac{\text{(Calculated Baud Rate - Desired Baud Rate)}}{\text{Desired Baud Rate}}$$

$$= (9615 - 9600) / 9600$$

$$= 0.16\%$$

It may be advantageous to use the high baud rate (BRGH = 1) even for slower baud clocks. This is because the FOSC/(16(X + 1)) equation can reduce the baud rate error in some cases.

Writing a new value to the SPBRG register causes the BRG timer to be reset (or cleared). This ensures the BRG does not wait for a timer overflow before outputting the new baud rate.

9.1.1 SAMPLING

The data on the RC7/RX/DT pin is sampled three times by a majority detect circuit to determine if a high or a low level is present at the RX pin.

TABLE 9-1 BAUD RATE FORMULA

SYNC	BRGH = 0 (Low Speed)	BRGH = 1 (High Speed)
0	(Asynchronous) Baud Rate = FOSC/(64(X+1))	Baud Rate= FOSC/(16(X+1))
1	(Synchronous) Baud Rate = FOSC/(4(X+1))	NA

X = value in SPBRG (0 to 255)

TABLE 9-2 REGISTERS ASSOCIATED WITH BAUD RATE GENERATOR

Address	Name	Bit 7	Bit 6	Bit 5	Bit 4	Bit 3	Bit 2	Bit 1	Bit 0	Value on: POR, BOR	Value on all other resets
98h	TXSTA	CSRC	TX9	TXEN	SYNC	—	BRGH	TRMT	TX9D	0000 -010	0000 -010
18h	RCSTA	SPEN	RX9	SREN	CREN	ADDEN	FERR	OERR	RX9D	0000 000x	0000 000x
99h	SPBRG	Baud Rate Generator Register								0000 0000	0000 0000

Legend: x = unknown, - = unimplemented read as '0'. Shaded cells are not used by the BRG.

TABLE 9-3 BAUD RATES FOR SYNCHRONOUS MODE

BAUD RATE (K)	FOSC = 20 MHz KBAUD	% ERROR	SPBRG value (decimal)	16 MHz KBAUD	% ERROR	SPBRG value (decimal)	10 MHz KBAUD	% ERROR	SPBRG value (decimal)	7.15909 MHz KBAUD	% ERROR	SPBRG value (decimal)
0.3	NA	-	-	NA	-	-	NA	-	-	NA	-	-
1.2	NA	-	-	NA	-	-	NA	-	-	NA	-	-
2.4	NA	-	-	NA	-	-	NA	-	-	NA	-	-
9.6	NA	-	-	NA	-	-	9.766	+1.73	255	9.622	+0.23	185
19.2	19.53	+1.73	255	19.23	+0.16	207	19.23	+0.16	129	19.24	+0.23	92
76.8	76.92	+0.16	64	76.92	+0.16	51	75.76	-1.36	32	77.82	+1.32	22
96	96.15	+0.16	51	95.24	-0.79	41	96.15	+0.16	25	94.20	-1.88	18
300	294.1	-1.96	16	307.69	+2.56	12	312.5	+4.17	7	298.3	-0.57	5
500	500	0	9	500	0	7	500	0	4	NA	-	-
HIGH	5000	-	0	4000	-	0	2500	-	0	1789.8	-	0
LOW	19.53	-	255	15.625	-	255	9.766	-	255	6.991	-	255

BAUD RATE (K)	FOSC = 5.0688 MHz KBAUD	% ERROR	SPBRG value (decimal)	4 MHz KBAUD	% ERROR	SPBRG value (decimal)	3.579545 MHz KBAUD	% ERROR	SPBRG value (decimal)	1 MHz KBAUD	% ERROR	SPBRG value (decimal)	32.768 kHz KBAUD	% ERROR	SPBRG value (decimal)
0.3	NA	-	-	NA	-	-	NA	-	-	NA	-	-	0.303	+1.14	26
1.2	NA	-	-	NA	-	-	NA	-	-	1.202	+0.16	207	1.170	-2.48	6
2.4	NA	-	-	NA	-	-	NA	-	-	2.404	+0.16	103	NA	-	-
9.6	9.6	0	131	9.615	+0.16	103	9.622	+0.23	92	9.615	+0.16	25	NA	-	-
19.2	19.2	0	65	19.231	+0.16	51	19.04	-0.83	46	19.24	+0.16	12	NA	-	-
76.8	79.2	+3.13	15	76.923	+0.16	12	74.57	-2.90	11	83.34	+8.51	2	NA	-	-
96	97.48	+1.54	12	1000	+4.17	9	99.43	+3.57	8	NA	-	-	NA	-	-
300	316.8	+5.60	3	NA	-	-	298.3	-0.57	2	NA	-	-	NA	-	-
500	NA	-	-	NA	-	-	NA	-	-	NA	-	-	NA	-	-
HIGH	1267	-	0	100	-	0	894.9	-	0	250	-	0	8.192	-	0
LOW	4.950	-	255	3.906	-	255	3.496	-	255	0.9766	-	255	0.032	-	255

TABLE 9-4 BAUD RATES FOR ASYNCHRONOUS MODE (BRGH = 0)

BAUD RATE (K)	FOSC = 20 MHz KBAUD	% ERROR	SPBRG value (decimal)	16 MHz KBAUD	% ERROR	SPBRG value (decimal)	10 MHz KBAUD	% ERROR	SPBRG value (decimal)	7.15909 MHz KBAUD	% ERROR	SPBRG value (decimal)
0.3	NA	-	-	NA	-	-	NA	-	-	NA	-	-
1.2	1.221	+1.73	255	1.202	+0.16	207	1.202	+0.16	129	1.203	+0.23	92
2.4	2.404	+0.16	129	2.404	+0.16	103	2.404	+0.16	64	2.380	-0.83	46
9.6	9.469	-1.36	32	9.615	+0.16	25	9.766	+1.73	15	9.322	-2.90	11
19.2	19.53	+1.73	15	19.23	+0.16	12	19.53	+1.73	7	18.64	-2.90	5
76.8	78.13	+1.73	3	83.33	+8.51	2	78.13	+1.73	1	NA	-	-
96	104.2	+8.51	2	NA	-	-	NA	-	-	NA	-	-
300	312.5	+4.17	0	NA	-	-	NA	-	-	NA	-	-
500	NA	-	-	NA	-	-	NA	-	-	NA	-	-
HIGH	312.5	-	0	250	-	0	156.3	-	0	111.9	-	0
LOW	1.221	-	255	0.977	-	255	0.6104	-	255	0.437	-	255

BAUD RATE (K)	FOSC = 5.0688 MHz KBAUD	% ERROR	SPBRG value (decimal)	4 MHz KBAUD	% ERROR	SPBRG value (decimal)	3.579545 MHz KBAUD	% ERROR	SPBRG value (decimal)	1 MHz KBAUD	% ERROR	SPBRG value (decimal)	32.768 kHz KBAUD	% ERROR	SPBRG value (decimal)
0.3	0.31	+3.13	255	0.3005	-0.17	207	0.301	+0.23	185	0.300	+0.16	51	0.256	-14.67	1
1.2	1.2	0	65	1.202	+1.67	51	1.190	-0.83	46	1.202	+0.16	12	NA	-	-
2.4	2.4	0	32	2.404	+1.67	25	2.432	+1.32	22	2.232	-6.99	6	NA	-	-
9.6	9.9	+3.13	7	NA	-	-	9.322	-2.90	5	NA	-	-	NA	-	-
19.2	19.8	+3.13	3	NA	-	-	18.64	-2.90	2	NA	-	-	NA	-	-
76.8	79.2	+3.13	0	NA	-	-	NA	-	-	NA	-	-	NA	-	-
96	NA	-	-	NA	-	-	NA	-	-	NA	-	-	NA	-	-
300	NA	-	-	NA	-	-	NA	-	-	NA	-	-	NA	-	-
500	NA	-	-	NA	-	-	NA	-	-	NA	-	-	NA	-	-
HIGH	79.2	-	0	62.500	-	0	55.93	-	0	15.63	-	0	0.512	-	0
LOW	0.3094	-	255	3.906	-	255	0.2185	-	255	0.0610	-	255	0.0020	-	255

 © 1999 Microchip Technology Inc.

TABLE 9-5 BAUD RATES FOR ASYNCHRONOUS MODE (BRGH = 1)

BAUD RATE (K)	FOSC = 20 MHz KBAUD	% ERROR	SPBRG value (decimal)	16 MHz KBAUD	% ERROR	SPBRG value (decimal)	10 MHz KBAUD	% ERROR	SPBRG value (decimal)	7.16 MHz KBAUD	% ERROR	SPBRG value (decimal)
9.6	9.615	+0.16	129	9.615	+0.16	103	9.615	+0.16	64	9.520	-0.83	46
19.2	19.230	+0.16	64	19.230	+0.16	51	18.939	-1.36	32	19.454	+1.32	22
38.4	37.878	-1.36	32	38.461	+0.16	25	39.062	+1.7	15	37.286	-2.90	11
57.6	56.818	-1.36	21	58.823	+2.12	16	56.818	-1.36	10	55.930	-2.90	7
115.2	113.636	-1.36	10	111.111	-3.55	8	125	+8.51	4	111.860	-2.90	3
250	250	0	4	250	0	3	NA	-	-	NA	-	-
625	625	0	1	NA	-	-	625	0	0	NA	-	-
1250	1250	0	0	NA	-	-	NA	-	-	NA	-	-

BAUD RATE (K)	FOSC = 5.068 MHz KBAUD	% ERROR	SPBRG value (decimal)	4 MHz KBAUD	% ERROR	SPBRG value (decimal)	3.579 MHz KBAUD	% ERROR	SPBRG value (decimal)	1 MHz KBAUD	% ERROR	SPBRG value (decimal)	32.768 kHz KBAUD	% ERROR	SPBRG value (decimal)
9.6	9.6	0	32	NA	-	-	9.727	+1.32	22	8.928	-6.99	6	NA	-	-
19.2	18.645	-2.94	16	1.202	+0.17	207	18.643	-2.90	11	20.833	+8.51	2	NA	-	-
38.4	39.6	+3.12	7	2.403	+0.13	103	37.286	-2.90	5	31.25	-18.61	1	NA	-	-
57.6	52.8	-8.33	5	9.615	+0.16	25	55.930	-2.90	3	62.5	+8.51	0	NA	-	-
115.2	105.6	-8.33	2	19.231	+0.16	12	111.860	-2.90	1	NA	-	-	NA	-	-
250	NA	-	-	NA	-	-	223.721	-10.51	0	NA	-	-	NA	-	-
625	NA	-	-	NA	-	-	NA	-	-	NA	-	-	NA	-	-
1250	NA	-	-	NA	-	-	NA	-	-	NA	-	-	NA	-	-

9.2 USART Asynchronous Mode

In this mode, the USART uses standard nonreturn-to-zero (NRZ) format (one start bit, eight or nine data bits and one stop bit). The most common data format is 8-bits. An on-chip dedicated 8-bit baud rate generator can be used to derive standard baud rate frequencies from the oscillator. The USART transmits and receives the LSb first. The USART's transmitter and receiver are functionally independent but use the same data format and baud rate. The baud rate generator produces a clock either x16 or x64 of the bit shift rate, depending on bit BRGH (TXSTA<2>). Parity is not supported by the hardware, but can be implemented in software (and stored as the ninth data bit). Asynchronous mode is stopped during SLEEP.

Asynchronous mode is selected by clearing bit SYNC (TXSTA<4>).

The USART Asynchronous module consists of the following important elements:

- Baud Rate Generator
- Sampling Circuit
- Asynchronous Transmitter
- Asynchronous Receiver

9.2.1 USART ASYNCHRONOUS TRANSMITTER

The USART transmitter block diagram is shown in Figure 9-3. The heart of the transmitter is the transmit (serial) shift register (TSR). The shift register obtains its data from the read/write transmit buffer, TXREG. The TXREG register is loaded with data in software. The TSR register is not loaded until the STOP bit has been transmitted from the previous load. As soon as the STOP bit is transmitted, the TSR is loaded with new data from the TXREG register (if available). Once the TXREG register transfers the data to the TSR register (occurs in one TCY), the TXREG register is empty and flag bit TXIF (PIR1<4>) is set. This interrupt can be enabled/disabled by setting/clearing enable bit TXIE (PIE1<4>). Flag bit TXIF will be set regardless of the state of enable bit TXIE and cannot be cleared in software. It will reset only when new data is loaded into the TXREG register. While flag bit TXIF indicated the status of the TXREG register, another bit TRMT (TXSTA<1>) shows the status of the TSR register. Status bit TRMT is a read only bit which is set when the TSR register is empty. No interrupt logic is tied to this bit, so the user has to poll this bit in order to determine if the TSR register is empty.

Note 1:	The TSR register is not mapped in data memory so it is not available to the user.
Note 2:	Flag bit TXIF is set when enable bit TXEN is set.

Steps to follow when setting up an Asynchronous Transmission:

1. Initialize the SPBRG register for the appropriate baud rate. If a high speed baud rate is desired, set bit BRGH. (Section 9.1)
2. Enable the asynchronous serial port by clearing bit SYNC and setting bit SPEN.
3. If interrupts are desired, then set enable bit TXIE.
4. If 9-bit transmission is desired, then set transmit bit TX9.
5. Enable the transmission by setting bit TXEN, which will also set bit TXIF.
6. If 9-bit transmission is selected, the ninth bit should be loaded in bit TX9D.
7. Load data to the TXREG register (starts transmission).

FIGURE 9-3: USART TRANSMIT BLOCK DIAGRAM

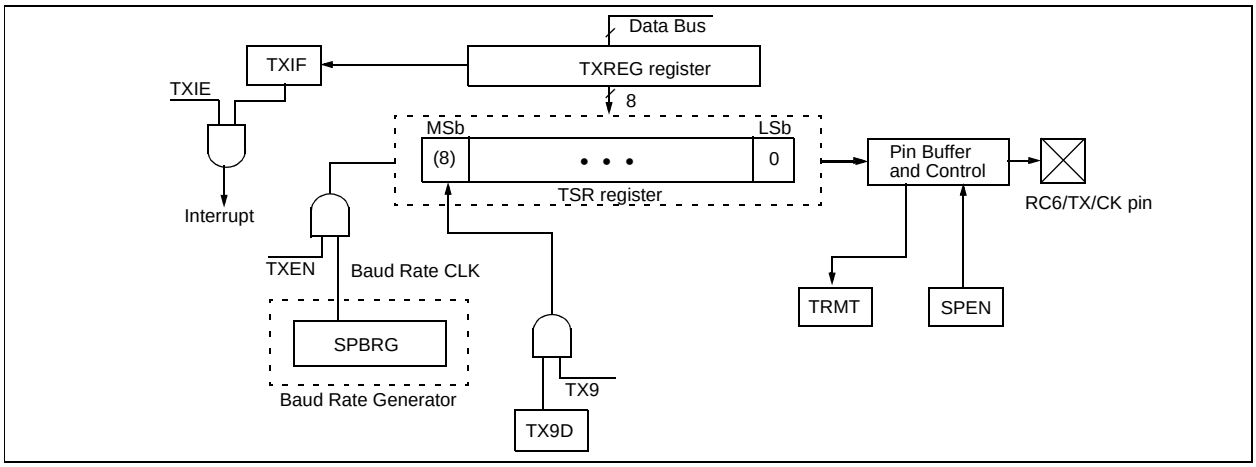

 © 1999 Microchip Technology Inc.

FIGURE 9-4: ASYNCHRONOUS TRANSMISSION

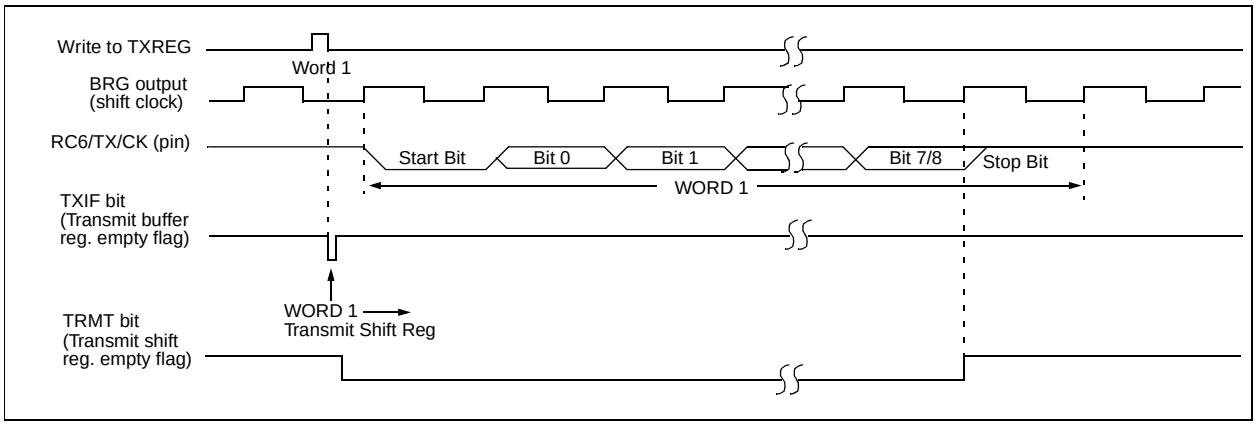

FIGURE 9-5: ASYNCHRONOUS TRANSMISSION (BACK TO BACK)

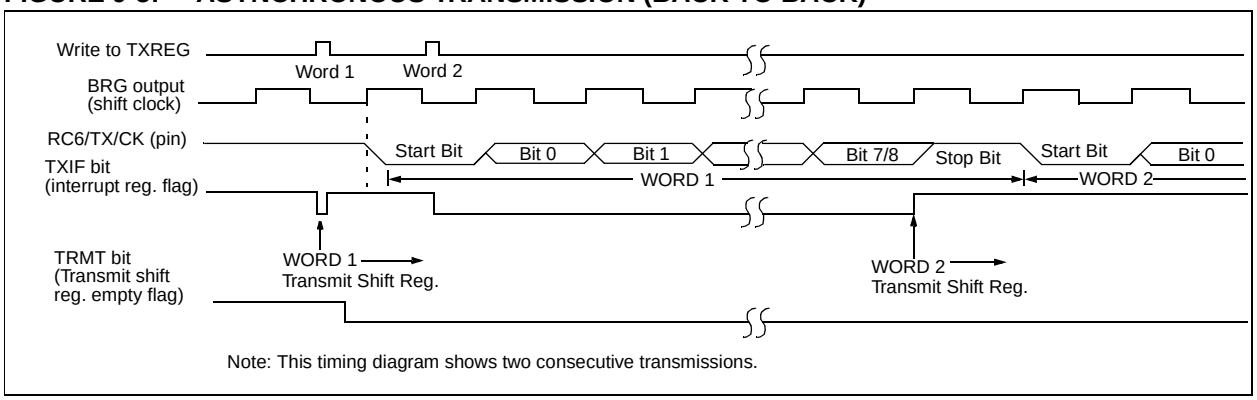

TABLE 9-6 REGISTERS ASSOCIATED WITH ASYNCHRONOUS TRANSMISSION

Address	Name	Bit 7	Bit 6	Bit 5	Bit 4	Bit 3	Bit 2	Bit 1	Bit 0	Value on: POR, BOR	Value on all other Resets
0Ch	PIR1	PSPIF(1)	ADIF	RCIF	TXIF	SSPIF	CCP1IF	TMR2IF	TMR1IF	0000 0000	0000 0000
18h	RCSTA	SPEN	RX9	SREN	CREN	ADDEN	FERR	OERR	RX9D	0000 000x	0000 000x
19h	TXREG	USART Transmit Register								0000 0000	0000 0000
8Ch	PIE1	PSPIE(1)	ADIE	RCIE	TXIE	SSPIE	CCP1IE	TMR2IE	TMR1IE	0000 0000	0000 0000
98h	TXSTA	CSRC	TX9	TXEN	SYNC	—	BRGH	TRMT	TX9D	0000 -010	0000 -010
99h	SPBRG	Baud Rate Generator Register								0000 0000	0000 0000

Legend: x = unknown, - = unimplemented locations read as '0'. Shaded cells are not used for Asynchronous Transmission.
Note 1: Bits PSPIE and PSPIF are reserved on the 28-pin devices, always maintain these bits clear.

9.2.2 USART ASYNCHRONOUS RECEIVER

The receiver block diagram is shown in Figure 9-6. The data is received on the RC7/RX/DT pin and drives the data recovery block. The data recovery block is actually a high speed shifter operating at x16 times the baud rate, whereas the main receive serial shifter operates at the bit rate or at FOSC.

The USART module has a special provision for multi-processor communication. When the RX9 bit is set in the RCSTA register, 9-bits are received and the ninth bit is placed in the RX9D status bit of the RSTA register. The port can be programmed such that when the stop bit is received, the serial port interrupt will only be activated if the RX9D bit = 1. This feature is enabled by setting the ADDEN bit RCSTA<3> in the RCSTA register. This feature can be used in a multi-processor system as follows:

A master processor intends to transmit a block of data to one of many slaves. It must first send out an address byte that identifies the target slave. An address byte is identified by the RX9D bit being a ‘1’ (instead of a ‘0’ for a data byte). If the ADDEN bit is set in the slave’s RCSTA register, all data bytes will be ignored. However, if the ninth received bit is equal to a ‘1’, indicating that the received byte is an address, the slave will be interrupted and the contents of the RSR register will be transferred into the receive buffer. This allows the slave to be interrupted only by addresses, so that the slave can examine the received byte to see if it is addressed. The addressed slave will then clear its ADDEN bit and prepare to receive data bytes from the master.

When ADDEN is set, all data bytes are ignored. Following the STOP bit, the data will not be loaded into the receive buffer, and no interrupt will occur. If another byte is shifted into the RSR register, the previous data byte will be lost.

The ADDEN bit will only take effect when the receiver is configured in 9-bit mode.

The receiver block diagram is shown in Figure 9-6.

Once Asynchronous mode is selected, reception is enabled by setting bit CREN (RCSTA<4>).

9.2.3 SETTING UP 9-BIT MODE WITH ADDRESS DETECT

Steps to follow when setting up an Asynchronous Reception with Address Detect Enabled:

- Initialize the SPBRG register for the appropriate baud rate. If a high speed baud rate is desired, set bit BRGH.
- Enable the asynchronous serial port by clearing bit SYNC and setting bit SPEN.
- If interrupts are desired, then set enable bit RCIE.
- Set bit RX9 to enable 9-bit reception.
- Set ADDEN to enable address detect.
- Enable the reception by setting enable bit CREN.
- Flag bit RCIF will be set when reception is complete, and an interrupt will be generated if enable bit RCIE was set.
- Read the RCSTA register to get the ninth bit and determine if any error occurred during reception.
- Read the 8-bit received data by reading the RCREG register, to determine if the device is being addressed.
- If any error occurred, clear the error by clearing enable bit CREN.
- If the device has been addressed, clear the ADDEN bit to allow data bytes and address bytes to be read into the receive buffer, and interrupt the CPU.

 © 1999 Microchip Technology Inc.

FIGURE 9-6: USART RECEIVE BLOCK DIAGRAM

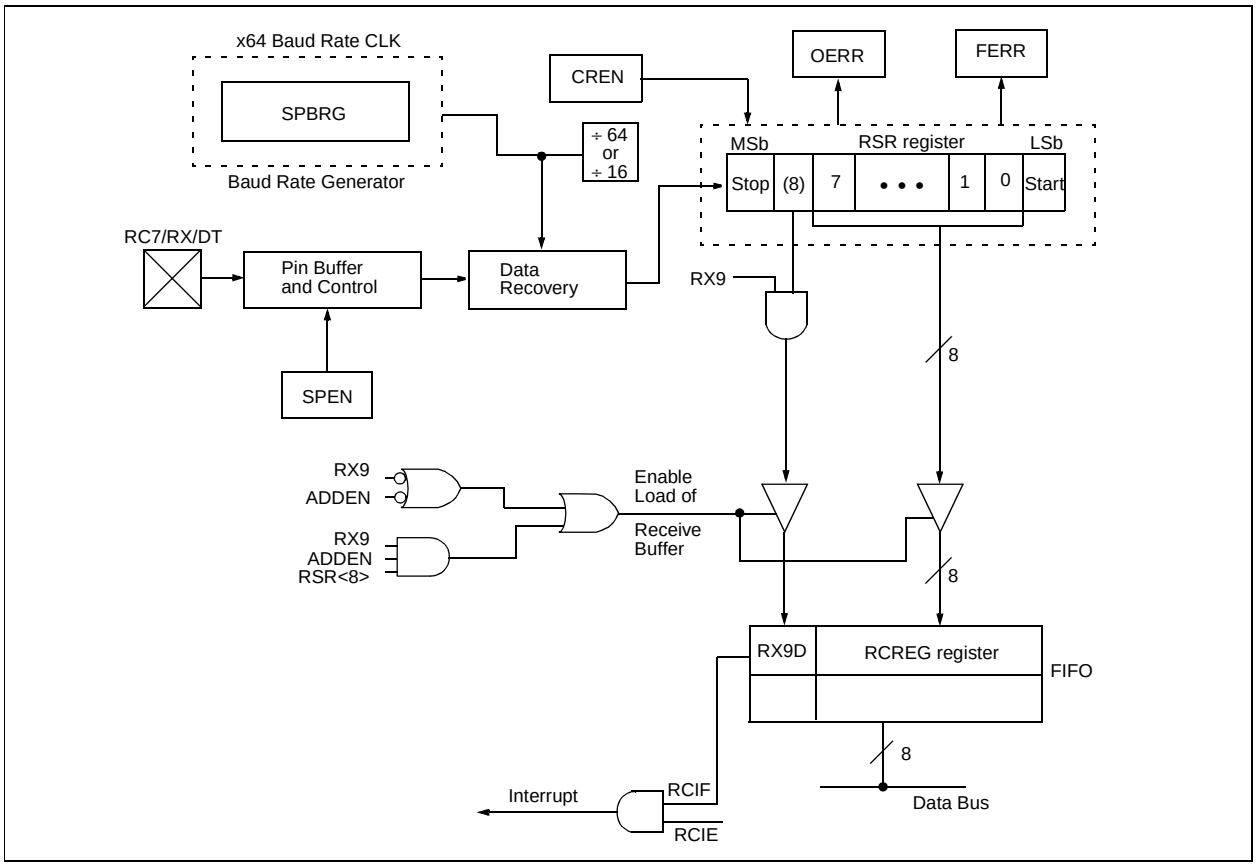

FIGURE 9-7: ASYNCHRONOUS RECEPTION WITH ADDRESS DETECT

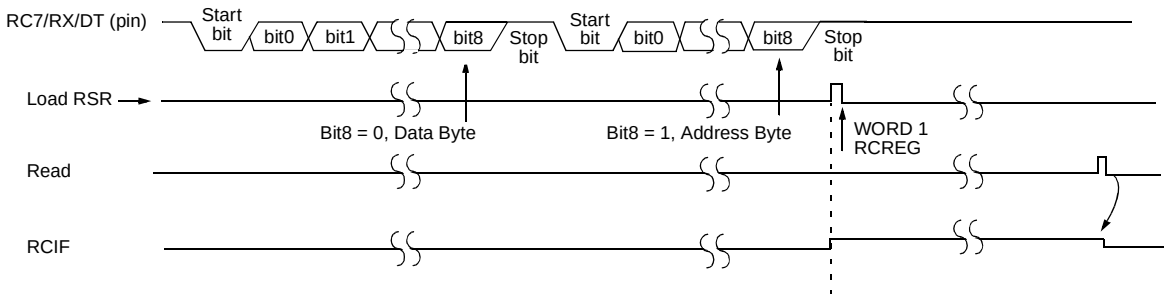

Note: This timing diagram shows a data byte followed by an address byte. The data byte is not read into the RCREG (receive buffer) because ADDEN = 1.

FIGURE 9-8: ASYNCHRONOUS RECEPTION WITH ADDRESS BYTE FIRST

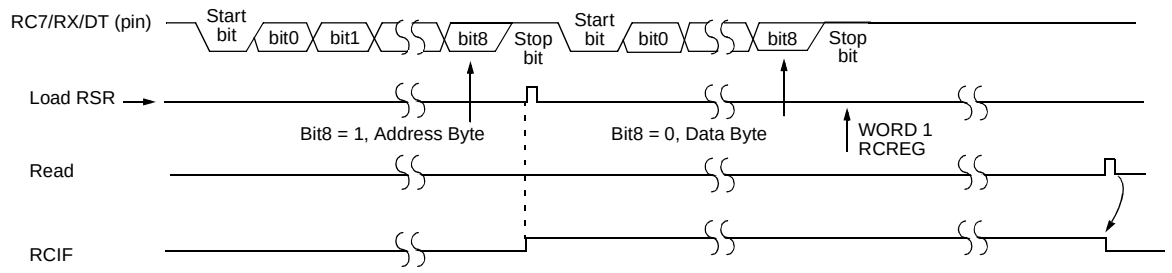

Note: This timing diagram shows an address byte followed by a data byte. The data byte is not read into the RCREG (receive buffer) because ADEN was not updated and still = 0.

TABLE 9-7 REGISTERS ASSOCIATED WITH ASYNCHRONOUS RECEPTION

Address	Name	Bit 7	Bit 6	Bit 5	Bit 4	Bit 3	Bit 2	Bit 1	Bit 0	Value on: POR, BOR	Value on all other Resets
0Ch	PIR1	PSPIF(1)	ADIF	RCIF	TXIF	SSPIF	CCP1IF	TMR2IF	TMR1IF	0000 0000	0000 0000
18h	RCSTA	SPEN	RX9	SREN	CREN	ADDEN	FERR	OERR	RX9D	0000 000x	0000 000x
1Ah	RCREG	USART Receive Register								0000 0000	0000 0000
8Ch	PIE1	PSPIE(1)	ADIE	RCIE	TXIE	SSPIE	CCP1IE	TMR2IE	TMR1IE	0000 0000	0000 0000
98h	TXSTA	CSRC	TX9	TXEN	SYNC	—	BRGH	TRMT	TX9D	0000 -010	0000 -010
99h	SPBRG	Baud Rate Generator Register								0000 0000	0000 0000

Legend: x = unknown, - = unimplemented locations read as '0'. Shaded cells are not used for Asynchronous Reception.
Note 1: Bits PSPIE and PSPIF are reserved on the 28-pin devices, always maintain these bits clear.

 © 1999 Microchip Technology Inc.

9.3 USART Synchronous Master Mode

In Synchronous Master mode, the data is transmitted in a half-duplex manner i.e. transmission and reception do not occur at the same time. When transmitting data, the reception is inhibited and vice versa. Synchronous mode is entered by setting bit SYNC (TXSTA<4>). In addition enable bit SPEN (RCSTA<7>) is set in order to configure the RC6/TX/CK and RC7/RX/DT I/O pins to CK (clock) and DT (data) lines respectively. The Master mode indicates that the processor transmits the master clock on the CK line. The Master mode is entered by setting bit CSRC (TXSTA<7>).

9.3.1 USART SYNCHRONOUS MASTER TRANSMISSION

The USART transmitter block diagram is shown in Figure 9-3. The heart of the transmitter is the transmit (serial) shift register (TSR). The shift register obtains its data from the read/write transmit buffer register TXREG. The TXREG register is loaded with data in software. The TSR register is not loaded until the last bit has been transmitted from the previous load. As soon as the last bit is transmitted, the TSR is loaded with new data from the TXREG (if available). Once the TXREG register transfers the data to the TSR register (occurs in one Tcycle), the TXREG is empty and interrupt bit, TXIF (PIR1<4>) is set. The interrupt can be enabled/disabled by setting/clearing enable bit TXIE (PIE1<4>). Flag bit TXIF will be set regardless of the state of enable bit TXIE and cannot be cleared in software. It will reset only when new data is loaded into the TXREG register. While flag bit TXIF indicates the status of the TXREG register, another bit TRMT (TXSTA<1>) shows the status of the TSR register. TRMT is a read only bit which is set when the TSR is empty. No interrupt logic is tied to this bit, so the user has to poll this bit in order to determine if the TSR register is empty. The TSR is not mapped in data memory so it is not available to the user.

Steps to follow when setting up a Synchronous Master Transmission:

1. Initialize the SPBRG register for the appropriate baud rate (Section 9.1).
2. Enable the synchronous master serial port by setting bits SYNC, SPEN, and CSRC.
3. If interrupts are desired, then set enable bit TXIE.
4. If 9-bit transmission is desired, then set bit TX9.
5. Enable the transmission by setting bit TXEN.
6. If 9-bit transmission is selected, the ninth bit should be loaded in bit TX9D.
7. Start transmission by loading data to the TXREG register.

TABLE 9-8 REGISTERS ASSOCIATED WITH SYNCHRONOUS MASTER TRANSMISSION

Address	Name	Bit 7	Bit 6	Bit 5	Bit 4	Bit 3	Bit 2	Bit 1	Bit 0	Value on: POR, BOR	Value on all other Resets
0Ch	PIR1	PSPIF(1)	ADIF	RCIF	TXIF	SSPIF	CCP1IF	TMR2IF	TMR1IF	0000 0000	0000 0000
18h	RCSTA	SPEN	RX9	SREN	CREN	ADDEN	FERR	OERR	RX9D	0000 000x	0000 000x
19h	TXREG	USART Transmit Register								0000 0000	0000 0000
8Ch	PIE1	PSPIE(1)	ADIE	RCIE	TXIE	SSPIE	CCP1IE	TMR2IE	TMR1IE	0000 0000	0000 0000
98h	TXSTA	CSRC	TX9	TXEN	SYNC	—	BRGH	TRMT	TX9D	0000 -010	0000 -010
99h	SPBRG	Baud Rate Generator Register								0000 0000	0000 0000

Legend: x = unknown, - = unimplemented, read as '0'. Shaded cells are not used for Synchronous Master Transmission.
Note 1: Bits PSPIE and PSPIF are reserved on the 28-pin devices, always maintain these bits clear.

FIGURE 9-9: SYNCHRONOUS TRANSMISSION

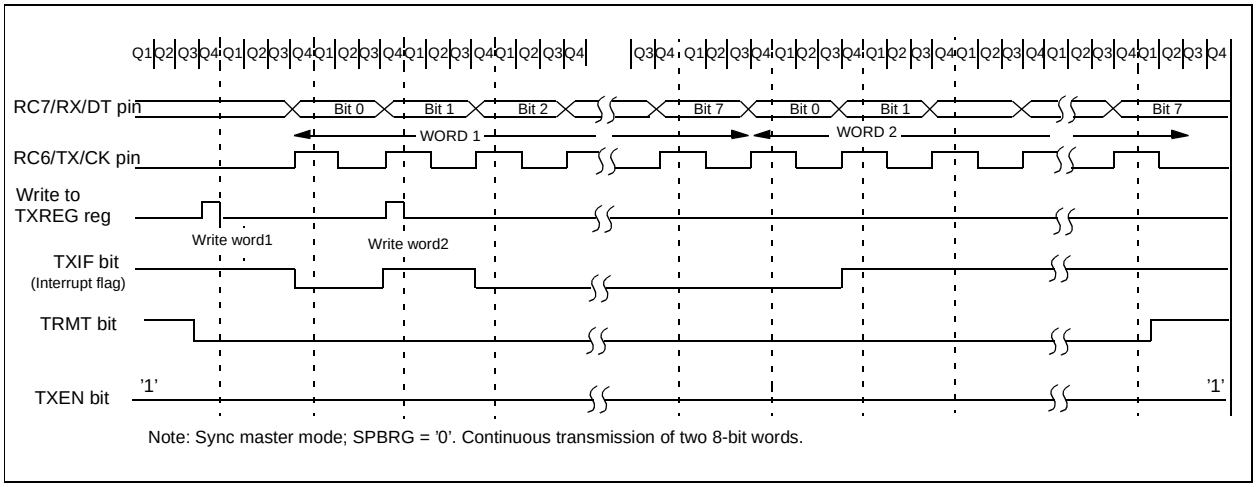

FIGURE 9-10: SYNCHRONOUS TRANSMISSION (THROUGH TXEN)

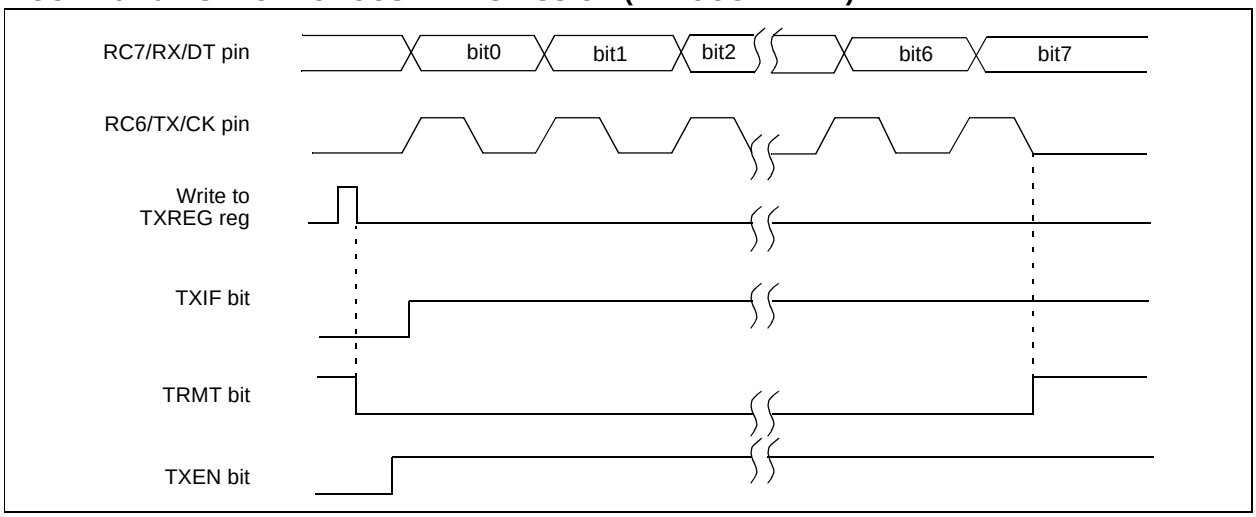

 © 1999 Microchip Technology Inc.

9.3.2 USART SYNCHRONOUS MASTER RECEPTION

Once Synchronous mode is selected, reception is enabled by setting either enable bit SREN (RCSTA<5>) or enable bit CREN (RCSTA<4>). Data is sampled on the RC7/RX/DT pin on the falling edge of the clock. If enable bit SREN is set, then only a single word is received. If enable bit CREN is set, the reception is continuous until CREN is cleared. If both bits are set then CREN takes precedence.

Steps to follow when setting up a Synchronous Master Reception:

1. Initialize the SPBRG register for the appropriate baud rate. (Section 9.1)
2. Enable the synchronous master serial port by setting bits SYNC, SPEN, and CSRC.
3. Ensure bits CREN and SREN are clear.
4. If interrupts are desired, then set enable bit RCIE.
5. If 9-bit reception is desired, then set bit RX9.
6. If a single reception is required, set bit SREN. For continuous reception set bit CREN.
7. Interrupt flag bit RCIF will be set when reception is complete and an interrupt will be generated if enable bit RCIE was set.
8. Read the RCSTA register to get the ninth bit (if enabled) and determine if any error occurred during reception.
9. Read the 8-bit received data by reading the RCREG register.
10. If any error occurred, clear the error by clearing bit CREN.

TABLE 9-9 REGISTERS ASSOCIATED WITH SYNCHRONOUS MASTER RECEPTION

Address	Name	Bit 7	Bit 6	Bit 5	Bit 4	Bit 3	Bit 2	Bit 1	Bit 0	Value on: POR, BOR	Value on all other Resets
0Ch	PIR1	PSPIF(1)	ADIF	RCIF	TXIF	SSPIF	CCP1IF	TMR2IF	TMR1IF	0000 0000	0000 0000
18h	RCSTA	SPEN	RX9	SREN	CREN	ADDEN	FERR	OERR	RX9D	0000 000x	0000 000x
1Ah	RCREG	USART Receive Register								0000 0000	0000 0000
8Ch	PIE1	PSPIE(1)	ADIE	RCIE	TXIE	SSPIE	CCP1IE	TMR2IE	TMR1IE	0000 0000	0000 0000
98h	TXSTA	CSRC	TX9	TXEN	SYNC	—	BRGH	TRMT	TX9D	0000 -010	0000 -010
99h	SPBRG	Baud Rate Generator Register								0000 0000	0000 0000

Legend: x = unknown, - = unimplemented read as '0'. Shaded cells are not used for Synchronous Master Reception.
Note 1: Bits PSPIE and PSPIF are reserved on the 28-pin devices, always maintain these bits clear.

FIGURE 9-11: SYNCHRONOUS RECEPTION (MASTER MODE, SREN)

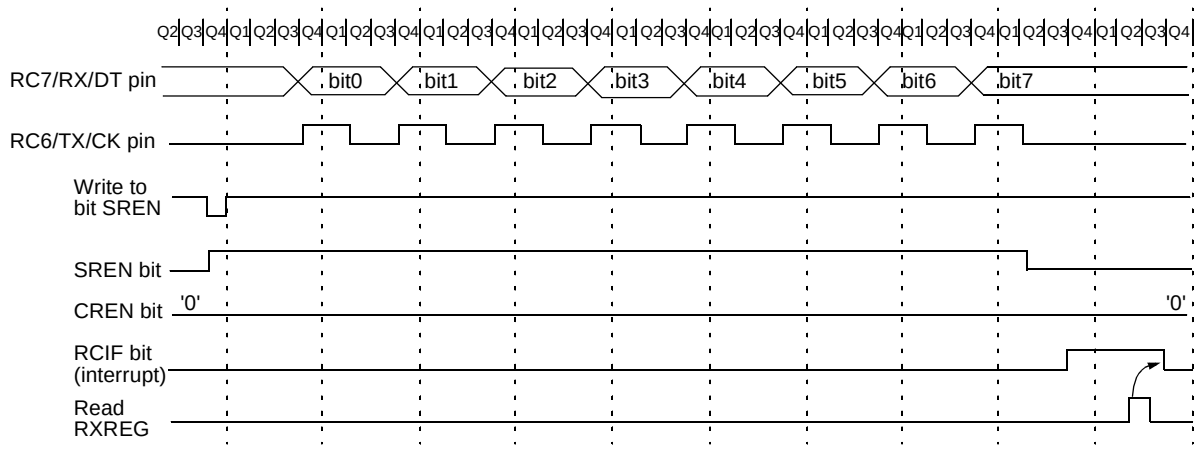

Note: Timing diagram demonstrates SYNC master mode with bit SREN = '1' and bit BRGH = '0'.

9.4 USART Synchronous Slave Mode

Synchronous slave mode differs from the Master mode in the fact that the shift clock is supplied externally at the RC6/TX/CK pin (instead of being supplied internally in master mode). This allows the device to transfer or receive data while in SLEEP mode. Slave mode is entered by clearing bit CSRC (TXSTA<7>).

9.4.1 USART SYNCHRONOUS SLAVE TRANSMIT

The operation of the synchronous master and slave modes are identical except in the case of the SLEEP mode.

If two words are written to the TXREG and then the SLEEP instruction is executed, the following will occur:

a) The first word will immediately transfer to the TSR register and transmit.
b) The second word will remain in TXREG register.
c) Flag bit TXIF will not be set.
d) When the first word has been shifted out of TSR, the TXREG register will transfer the second word to the TSR and flag bit TXIF will now be set.
e) If enable bit TXIE is set, the interrupt will wake the chip from SLEEP and if the global interrupt is enabled, the program will branch to the interrupt vector (0004h).

Steps to follow when setting up a Synchronous Slave Transmission:

1. Enable the synchronous slave serial port by setting bits SYNC and SPEN and clearing bit CSRC.
2. Clear bits CREN and SREN.
3. If interrupts are desired, then set enable bit TXIE.
4. If 9-bit transmission is desired, then set bit TX9.
5. Enable the transmission by setting enable bit TXEN.
6. If 9-bit transmission is selected, the ninth bit should be loaded in bit TX9D.
7. Start transmission by loading data to the TXREG register.

9.4.2 USART SYNCHRONOUS SLAVE RECEPTION

The operation of the synchronous master and slave modes is identical except in the case of the SLEEP mode. Also, bit SREN is a don't care in slave mode.

If receive is enabled, by setting bit CREN, prior to the SLEEP instruction, then a word may be received during SLEEP. On completely receiving the word, the RSR register will transfer the data to the RCREG register and if enable bit RCIE bit is set, the interrupt generated will wake the chip from SLEEP. If the global interrupt is enabled, the program will branch to the interrupt vector (0004h).

Steps to follow when setting up a Synchronous Slave Reception:

1. Enable the synchronous master serial port by setting bits SYNC and SPEN and clearing bit CSRC.
2. If interrupts are desired, then set enable bit RCIE.
3. If 9-bit reception is desired, then set bit RX9.
4. To enable reception, set enable bit CREN.
5. Flag bit RCIF will be set when reception is complete and an interrupt will be generated, if enable bit RCIE was set.
6. Read the RCSTA register to get the ninth bit (if enabled) and determine if any error occurred during reception.
7. Read the 8-bit received data by reading the RCREG register.
8. If any error occurred, clear the error by clearing bit CREN.

 © 1999 Microchip Technology Inc.

TABLE 9-10 REGISTERS ASSOCIATED WITH SYNCHRONOUS SLAVE TRANSMISSION

Address	Name	Bit 7	Bit 6	Bit 5	Bit 4	Bit 3	Bit 2	Bit 1	Bit 0	Value on: POR, BOR	Value on all other Resets
0Ch	PIR1	PSPIF(1)	ADIF	RCIF	TXIF	SSPIF	CCP1IF	TMR2IF	TMR1IF	0000 0000	0000 0000
18h	RCSTA	SPEN	RX9	SREN	CREN	ADDEN	FERR	OERR	RX9D	0000 000x	0000 000x
19h	TXREG	USART Transmit Register								0000 0000	0000 0000
8Ch	PIE1	PSPIE(1)	ADIE	RCIE	TXIE	SSPIE	CCP1IE	TMR2IE	TMR1IE	0000 0000	0000 0000
98h	TXSTA	CSRC	TX9	TXEN	SYNC	—	BRGH	TRMT	TX9D	0000 -010	0000 -010
99h	SPBRG	Baud Rate Generator Register								0000 0000	0000 0000

Legend: x = unknown, - = unimplemented read as '0'. Shaded cells are not used for Synchronous Slave Transmission.
Note 1: Bits PSPIE and PSPIF are reserved on the 28-pin devices, always maintain these bits clear.

TABLE 9-11 REGISTERS ASSOCIATED WITH SYNCHRONOUS SLAVE RECEPTION

Address	Name	Bit 7	Bit 6	Bit 5	Bit 4	Bit 3	Bit 2	Bit 1	Bit 0	Value on: POR, BOR	Value on all other Resets
0Ch	PIR1	PSPIF(1)	ADIF	RCIF	TXIF	SSPIF	CCP1IF	TMR2IF	TMR1IF	0000 0000	0000 0000
18h	RCSTA	SPEN	RX9	SREN	CREN	ADDEN	FERR	OERR	RX9D	0000 000x	0000 000x
1Ah	RCREG	USART Receive Register								0000 0000	0000 0000
8Ch	PIE1	PSPIE(1)	ADIE	RCIE	TXIE	SSPIE	CCP1IE	TMR2IE	TMR1IE	0000 0000	0000 0000
98h	TXSTA	CSRC	TX9	TXEN	SYNC	—	BRGH	TRMT	TX9D	0000 -010	0000 -010
99h	SPBRG	Baud Rate Generator Register								0000 0000	0000 0000

Legend: x = unknown, - = unimplemented read as '0'. Shaded cells are not used for Synchronous Slave Reception.
Note 1: Bits PSPIE and PSPIF are reserved on the 28-pin devices, always maintain these bits clear.

NOTES:

 © 1999 Microchip Technology Inc.

10.0 VOLTAGE REFERENCE MODULE AND LOW-VOLTAGE DETECT

The Voltage Reference module provides reference voltages for the Brown-out Reset circuitry, the Low-voltage Detect circuitry and the A/D converter.

The source for the reference voltages comes from the bandgap reference circuit. The bandgap circuit is energized anytime the reference voltage is required by the other sub-modules, and is powered down when not in use. The control registers for this module are LVDCON and REFCON, as shown in Figure 10-1 and Figure 10-2.

FIGURE 10-1: LVDCON: LOW-VOLTAGE DETECT CONTROL REGISTER

U-0	U-0	R-0	R/W-0	R/W-0	R/W-1	R/W-0	R/W-1
—	—	BGST	LVDEN	LV3	LV2	LV1	LV0
bit7							bit0

R = Readable bit
W = Writable bit
U = Unimplemented bit, read as ‘0’
- n =Value at POR reset

bit 7-6: **Unimplemented**: Read as '0'

bit 5: **BGST**: Bandgap Stable Status Flag bit
1 = Indicates that the bandgap voltage is stable, and LVD interrupt is reliable
0 = Indicates that the bandgap voltage is not stable, and LVD interrupt should not be enabled

bit 4: **LVDEN**: Low-voltage Detect Power Enable bit
1 = Enables LVD, powers up bandgap circuit and reference generator
0 = Disables LVD, powers down bandgap circuit if unused by BOR or VRH/VRL

bit 3-0: **LV3:LV0**: Low Voltage Detection Limit bits (1)
`1111` = External analog input is used
`1110` = 4.5V
`1101` = 4.2V
`1100` = 4.0V
`1011` = 3.8V
`1010` = 3.6V
`1001` = 3.5V
`1000` = 3.3V
`0111` = 3.0V
`0110` = 2.8V
`0101` = 2.7V
`0100` = 2.5V

Note 1: These are the minimum trip points for the LVD, see Table 15-3 for the trip point tolerances. Selection of an unused setting may result in an inadvertant interrupt.

FIGURE 10-2: REFCON: VOLTAGE REFERENCE CONTROL REGISTER

R/W-0	R/W-0	R/W-0	R/W-0	U-0	U-0	U-0	U-0
VRHEN	VRLEN	VRHOEN	VRLOEN	—	—	—	—
bit7							bit0

R = Readable bit
W = Writable bit
U = Unimplemented bit, read as ‘0’
- n = Value at POR reset

bit 7: **VRHEN**: Voltage Reference High Enable bit (VRH = 4.096V)
1 = Enabled, powers up reference generator
0 = Disabled, powers down reference generator if unused by LVD, BOR, or VRL

bit 6: **VRLEN**: Voltage Reference Low Enable bit (VRL = 2.048V)
1 = Enabled, powers up reference generator
0 = Disabled, powers down reference generator if unused by LVD, BOR, or VRH

bit 5: **VRHOEN**: High Voltage Reference Output Enable bit
1 = Enabled, VRH analog reference is presented on RA3 if enabled (VRHEN = 1)
0 = Disabled, analog reference is used internally only

bit 4: **VRLOEN**: Low Voltage Reference Output Enable bit
1 = Enabled, VRL analog reference is presented on RA2 if enabled (VRLEN = 1)
0 = Disabled, analog reference is used internally only

bit 3-0: **Unimplemented**: Read as '0’

10.1 Bandgap Voltage Reference

The bandgap module generates a stable voltage reference of 1.22V over a range of temperatures and device supply voltages. This module is enabled anytime any of the following are enabled:

- Brown-out Reset
- Low-voltage Detect
- Either of the internal analog references (VRH, VRL)

Whenever the above are all disabled, the bandgap module is disabled and draws no current.

10.2 Internal VREF for A/D Converter

The bandgap output voltage is used to generate two stable references for the A/D converter module. These references are enabled in software to provide the user with the means to turn them on and off in order to minimize current consumption. Each reference can be individually enabled.

The 4.096V reference (VRH) is enabled with control bit VRHEN (REFCON<7>). When this bit is set, the gain amplifier is enabled. After a specified start-up time a stable reference of 4.096V is generated and can be used by the A/D converter as the VRH input.

The 2.048V reference (VRL) is enabled by setting control bit VRLEN (REFCON<6>). When this bit is set, the gain amplifier is enabled. After a specified start up time a stable reference of 2.048V is generated and can be used by the A/D converter as the VRL input.

Each voltage reference can source/sink up to 5 mA of current.

Each reference, if enabled, can be presented on an external pin by setting the VRHOEN (high reference output enable) or VRLOEN (low reference output enable) control bit. If the reference is not enabled, the VRHOEN and VRLOEN bits will have no effect on the corresponding pin. The device specific pin can then be used as general purpose I/O.

Note: If VRH or VRL is enabled and the other reference (VRL or VRH), the BOR, and the LVD modules are not enabled, the bandgap will require a start-up time of no more than 50 µs before the bandgap reference is stable. Before using the internal VRH or VRL reference, ensure that the bandgap reference voltage is stable by monitoring the BGST bit in the LVDCON register. The voltage references will not be reliable until the bandgap is stable as shown by BGST being set.

 © 1999 Microchip Technology Inc.

10.3 Low-voltage Detect (LVD)

This module is used to generate an interrupt when the supply voltage falls below a specified “trip” voltage. This module operates completely under software control. This allows a user to power the module on and off to periodically monitor the supply voltage, and thus minimize total current consumption.

FIGURE 10-3: BLOCK DIAGRAM OF LVD AND VOLTAGE REFERENCE CIRCUIT

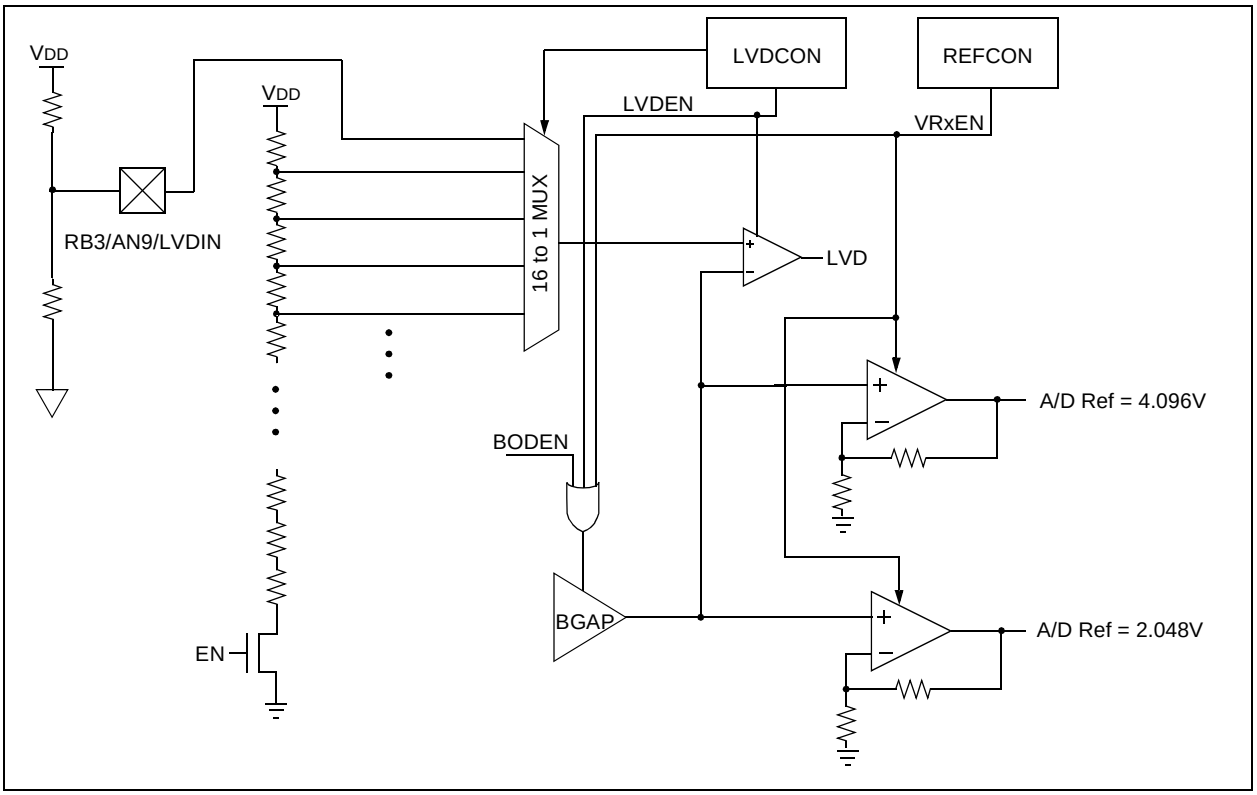

The LVD module is enabled by setting the LVDEN bit in the LVDCON register. The “trip point” voltage is the minimum supply voltage level at which the device can operate before the LVD module asserts an interrupt. When the supply voltage is equal to or less than the trip point, the module will generate an interrupt signal setting interrupt flag bit LVDIF. If interrupt enable bit LVDIE was set, then an interrupt is generated. The LVD interrupt can wake the device from sleep. The "trip point" voltage is software programmable to any one of 16 values, five of which are reserved (See Figure 10-1). The trip point is selected by programming the LV3:LV0 bits (LVDCON<3:0>).

> **Note:** The LVDIF bit can not be cleared until the supply voltage rises above the LVD trip point. If interrupts are enabled, clear the LVDIE bit once the first LVD interrupt occurs to prevent reentering the interrupt service routine immediately after exiting the ISR.

Once the LV bits have been programmed for the specified trip voltage, the low-voltage detect circuitry is then enabled by setting the LVDEN (LVDCON<4>) bit.

If the bandgap reference voltage is previously unused by either the brown-out circuitry or the voltage reference circuitry, then the bandgap circuit requires a time to start-up and become stable before a low voltage condition can be reliably detected. The low-voltage interrupt flag is prevented from being set until the bandgap has reached a stable reference voltage.

When the bandgap is stable the BGST (LVDCON<5>) bit is set indicating that the low-voltage interrupt flag bit is released to be set if VDD is equal to or less than the LVD trip point.

10.3.1 EXTERNAL ANALOG VOLTAGE INPUT

The LVD module has an additional feature that allows the user to supply the trip voltage to the module from an external source. This mode is enabled when LV3:LV0 = 1111. When these bits are set the comparator input is multiplexed from an external input pin (RB3/AN9/LVDIN.

NOTES:

 © 1999 Microchip Technology Inc.

11.0 ANALOG-TO-DIGITAL CONVERTER (A/D) MODULE

The analog-to-digital (A/D) converter module has six inputs for the PIC16C773 and ten for the PIC16C774.

The analog-to-digital converter (A/D) allows conversion of an analog input signal to a corresponding 12-bit digital number. The A/D module has up to 10 analog inputs, which are multiplexed into one sample and hold. The output of the sample and hold is the input into the converter, which generates the result via successive approximation. The analog reference voltages are software selectable to either the device's analog positive and negative supply voltages (AV_{DD}/AV_{SS}), the voltage level on the V_{REF}+ and V_{REF}- pins, or internal voltage references if available (VRH, VRL).

The A/D converter has a unique feature of being able to operate while the device is in SLEEP mode. To operate in sleep, the A/D conversion clock must be derived from the A/D's internal RC oscillator.

The A/D module has four registers. These registers are:

- A/D Result Register Low ADRESL
- A/D Result Register High ADRESH
- A/D Control Register 0 (ADCON0)
- A/D Control Register 1 (ADCON1)

A device reset forces all registers to their reset state. This forces the A/D module to be turned off and any conversion is aborted.

11.1 Control Registers

The ADCON0 register, shown in Figure 11-1, controls the operation of the A/D module. The ADCON1 register, shown in Figure 11-2, configures the functions of the port pins, the voltage reference configuration and the result format. The port pins can be configured as analog inputs or as digital I/O.

The combination of the ADRESH and ADRESL registers contain the result of the A/D conversion. The register pair is referred to as the ADRES register. When the A/D conversion is complete, the result is loaded into ADRES, the GO/$\overline{\text{DONE}}$ bit (ADCON0<2>) is cleared, and the A/D interrupt flag ADIF is set. The block diagram of the A/D module is shown in Figure 11-3.

FIGURE 11-1: ADCON0 REGISTER (ADDRESS 1Fh).

R/W-0	R/W-0	R/W-0	R/W-0	R/W-0	R/W-0	R/W-0	R/W-0
ADCS1	ADCS0	CHS2	CHS1	CHS0	GO/$\overline{\text{DONE}}$	CHS3	ADON
bit7							bit 0

R =	Readable bit
W =	Writable bit
- n =	Value at POR reset

bit 7:6 **ADCS1:ADCS0:** A/D Conversion Clock Select bits
00 = Fosc/2
01 = Fosc/8
10 = Fosc/32
11 = F_{RC} (clock derived from an RC oscillator = 1 MHz max)

bit 5:3,1 **CHS3:CHS0:** Analog Channel Select bits
0000 = channel 00 (AN0)
0001 = channel 01 (AN1)
0010 = channel 02 (AN2)
0011 = channel 03 (AN3)
0100 = channel 04 (AN4) (Reserved on 28-pin devices, do not use)
0101 = channel 05 (AN5) (Reserved on 28-pin devices, do not use)
0110 = channel 06 (AN6) (Reserved on 28-pin devices, do not use)
0111 = channel 07 (AN7) (Reserved on 28-pin devices, do not use)
1000 = channel 08 (AN8)
1001 = channel 09 (AN9)
1010, 1011, 1100, 1101, 1110,1111 are reserved, do not select.

bit 2: **GO/$\overline{\text{DONE}}$:** A/D Conversion Status bit
1 = A/D conversion cycle in progress. Setting this bit starts an A/D conversion cycle.
This bit is automatically cleared by hardware when the A/D conversion has completed.
0 = A/D conversion completed/not in progress

bit 0: **ADON:** A/D On bit
1 = A/D converter module is operating
0 = A/D converter is shutoff and consumes no operating current

FIGURE 11-2: ADCON1 REGISTER (ADDRESS 9Fh)

R/W-0	R/W-0	R/W-0	R/W-0	R/W-0	R/W-0	R/W-0	R/W-0
ADFM	VCFG2	VCFG1	VCFG0	PCFG3	PCFG2	PCFG1	PCFG0
bit7							bit 0

R =	Readable bit
W =	Writable bit
U =	Unimplemented bit, read as ‘0’
- n =	Value at POR reset

bit 7: **ADFM:** A/D Result Format Select bit
1 = Right justified
0 = Left justified

bit 6:4 **VCFG2:VCFG0:** Voltage reference configuration bits

	A/D VREFH	A/D VREFL
000	AVDD	AVSS
001	External VREF+	External VREF-
010	Internal VRH	Internal VRL
011	External VREF+	AVSS
100	Internal VRH	AVSS
101	AVDD	External VREF-
110	AVDD	Internal VRL
111	Internal VRL	AVSS

bit 3:0 **PCFG3:PCFG0:** A/D Port Configuration bits(1)

	AN9	AN8	AN7	AN6	AN5	AN4	AN3	AN2	AN1	AN0
0000	A	A	A	A	A	A	A	A	A	A
0001	A	A	A	A	A	A	A	A	A	A
0010	A	A	A	A	A	A	A	A	A	A
0011	A	A	A	A	A	A	A	A	A	A
0100	A	A	A	A	A	A	A	A	A	A
0101	A	A	A	A	A	A	A	A	A	A
0110	D	A	A	A	A	A	A	A	A	A
0111	D	D	A	A	A	A	A	A	A	A
1000	D	D	D	A	A	A	A	A	A	A
1001	D	D	D	D	A	A	A	A	A	A
1010	D	D	D	D	D	A	A	A	A	A
1011	D	D	D	D	D	D	A	A	A	A
1100	D	D	D	D	D	D	D	A	A	A
1101	D	D	D	D	D	D	D	D	A	A
1110	D	D	D	D	D	D	D	D	D	A
1111	D	D	D	D	D	D	D	D	D	D

A = Analog input D= Digital I/O

Note 1: Selection of an unimplemented channel produces a result of 0xFFFFFF.

 © 1999 Microchip Technology Inc.

The value that is in the ADRESH and ADRESL registers are not modified for a Power-on Reset. The ADRESH and ADRESL registers will contain unknown data after a Power-on Reset.

After the A/D module has been configured as desired, the selected channel must be acquired before the conversion is started. The analog input channels must have their corresponding TRIS bits selected as an input. To determine acquisition time, see Section 11.6. After this acquisition time has elapsed the A/D conversion can be started. The following steps should be followed for doing an A/D conversion:

11.2 Configuring the A/D Module

11.3 Configuring Analog Port Pins

The ADCON1 and TRIS registers control the operation of the A/D port pins. The port pins that are desired as analog inputs must have their corresponding TRIS bit set (input). If the TRIS bit is cleared (output), the digital output level (V_{OH} or V_{OL}) will be converted.

The A/D operation is independent of the state of the CHS3:CHS0 bits and the TRIS bits.

Note 1:	When reading the PORTA or PORTE register, all pins configured as analog input channels will read as cleared (a low level). When reading the PORTB register, all pins configured as analog input channels will read as set (a high level). Pins configured as digital inputs, will convert an analog input. Analog levels on a digitally configured input will not affect the conversion accuracy.
Note 2:	Analog levels on any pin that is defined as a digital input (including the ANx pins), may cause the input buffer to consume current that is out of the devices specification.

11.3.1 CONFIGURING THE REFERENCE VOLTAGES

The VCFG bits in the ADCON1 register configure the A/D module reference inputs. The reference high input can come from an internal reference (VRH) or (VRL), an external reference (V_{REF+}), or A_{VDD}. The low reference input can come from an internal reference (VRL), an external reference (V_{REF-}), or A_{VSS}. If an external reference is chosen for the reference high or reference low inputs, the port pin that multiplexes the incoming external references is configured as an analog input, regardless of the values contained in the A/D port configuration bits (PCFG3:PCFG0).

After the A/D module has been configured as desired. and the analog input channels have their corresponding TRIS bits selected for port inputs, the selected channel must be acquired before conversion is started. The A/D conversion cycle can be initiated by setting the GO/$\overline{\text{DONE}}$ bit. The A/D conversion begins, and lasts for 13T_{AD}. The following steps should be followed for performing an A/D conversion:

1. Configure the A/D module
   - Configure analog pins / voltage reference / and digital I/O (ADCON1)
   - Select A/D input channel (ADCON0)
   - Select A/D conversion clock (ADCON0)
   - Turn on A/D module (ADCON0)
2. Configure A/D interrupt (if required)
   - Clear ADIF bit
   - Set ADIE bit
   - Set PEIE bit
   - Set GIE bit
3. Wait the required acquisition time (3T_{AD})
4. Start conversion
   - Set GO/$\overline{\text{DONE}}$ bit (ADCON0)
5. Wait 13T_{AD} until A/D conversion is complete, by either:
   - Polling for the GO/$\overline{\text{DONE}}$ bit to be cleared

   OR
   - Waiting for the A/D interrupt
6. Read A/D Result registers (ADRESH and ADRESL), clear ADIF if required.
7. For next conversion, go to step 1, step 2 or step 3 as required.

Clearing the GO/$\overline{\text{DONE}}$ bit during a conversion will abort the current conversion. The ADRESH and ADRESL registers **WILL** be updated with the partially completed A/D conversion value. That is, the ADRESH and ADRESL registers **WILL** contain the value of the current incomplete conversion.

Note:	Do not set the ADON bit and the GO/$\overline{\text{DONE}}$ bit in the same instruction. Doing so will cause the GO/$\overline{\text{DONE}}$ bit to be automatically cleared.

FIGURE 11-3: A/D BLOCK DIAGRAM

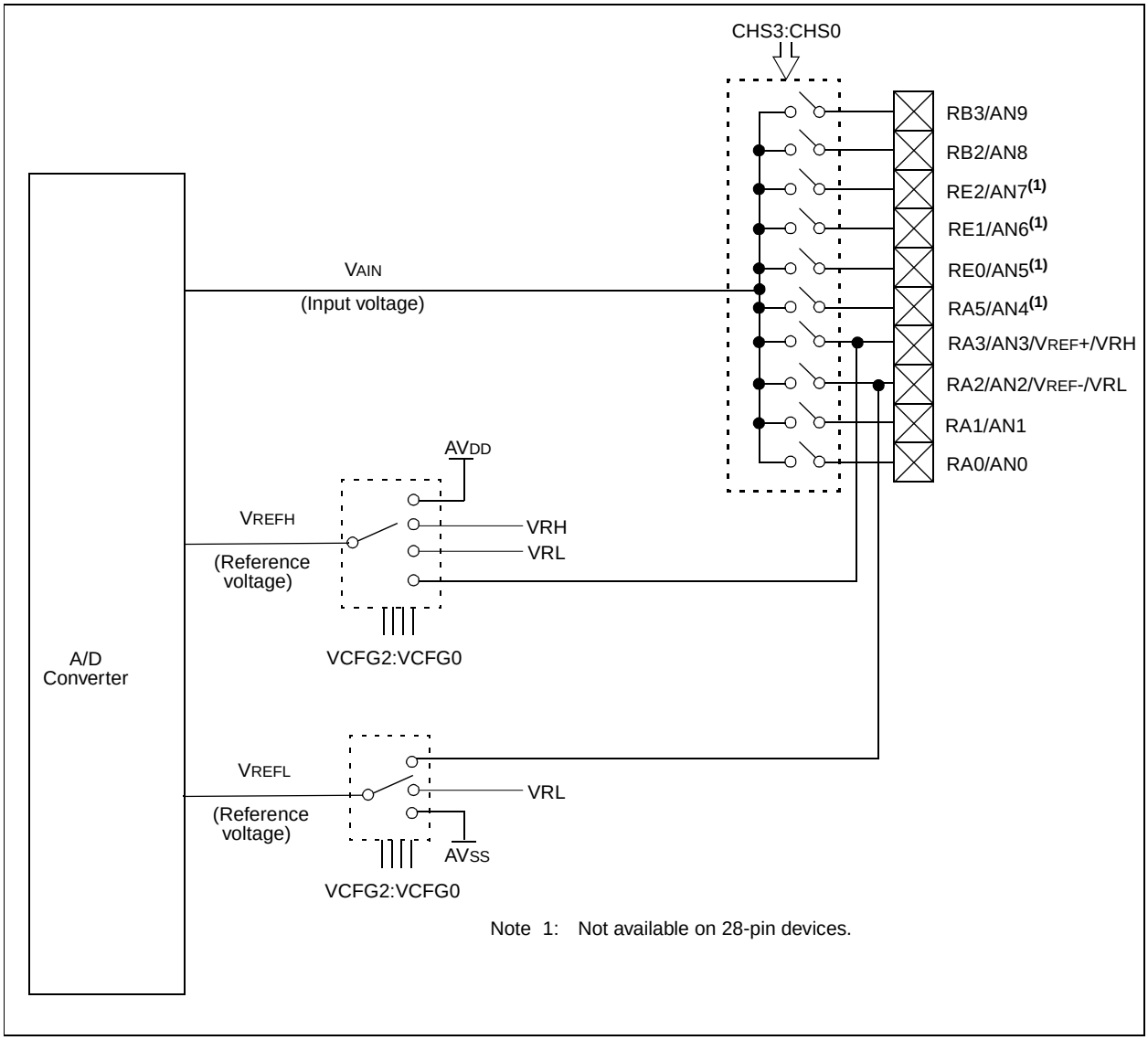

 © 1999 Microchip Technology Inc.

11.4 Selecting the A/D Conversion Clock

The A/D conversion cycle requires 13TAD: 1 TAD for settling time, and 12 TAD for conversion. The source of the A/D conversion clock is software selected. The four possible options for TAD are:

- 2 TOSC
- 8 TOSC
- 32 TOSC
- Internal RC oscillator

Note that these options are the same as those of the 8-bit A/D.

For correct A/D conversions, the A/D conversion clock (TAD) must be selected to ensure a minimum TAD time of 1.6 µs. Table 11-1 shows the resultant TAD times derived from the device operating frequencies and the A/D clock source selected.

The ADIF bit is set on the rising edge of the 14th TAD. The GO/DONE bit is cleared on the falling edge of the 14th TAD.

TABLE 11-1 TAD vs. DEVICE OPERATING FREQUENCIES

AD Clock Source (TAD)		Device Frequency			
Operation	**ADCS<1:0>**	**20 MHz**	**5 MHz**	**4 MHz**	**1.25 MHz**
2 TOSC	00	100 ns(2)	400 ns(2)	500 ns(2)	1.6 µs
8 TOSC	01	800 ns(2)	1.6 µs	2.0 µs	6.4 µs
32 TOSC	10	1.6 µs	6.4 µs	8.0 µs(3)	24 µs(3)
RC	11	2 - 6 µs(1,4)	2 - 6 µs(1,4)	2 - 6 µs(1,4)	2 - 6 µs(1,4)

Note 1: The RC source has a typical TAD time of 4 µs for VDD > 3.0V.
2: These values violate the minimum required TAD time.
3: For faster conversion times, the selection of another clock source is recommended.
4: When the device frequency is greater than 1 MHz, the RC A/D conversion clock source is only recommended if the conversion will be performed during sleep.

11.5 A/D Conversions

Figure 11-5 shows an example that performs an A/D conversion. The port pins are configured as analog inputs. The analog reference VREF+ is the device AVDD and the analog reference VREF- is the device AVSS. The A/D interrupt is enabled, and the A/D conversion clock is TRC. The conversion is performed on the AN0 channel.

FIGURE 11-4: PERFORMING AN A/D CONVERSION

```
    BCF     PIR1, ADIF      ;Clear A/D Int Flag
    BSF     STATUS, RP0     ;Select Page 1
    CLRF    ADCON1          ;Configure A/D Inputs
    BSF     PIE1, ADIE      ;Enable A/D interrupt
    BCF     STATUS, RP0     ;Select Page 0
    MOVLW   0xC1            ;RC clock, A/D is on,
                            ;Ch 0 is selected
    MOVWF   ADCON0          ;
    BSF     INTCON, PEIE    ;Enable Peripheral
    BSF     INTCON, GIE     ;Enable All Interrupts
;
; Ensure that the required sampling time for the
; selected input channel has lapsed. Then the
; conversion may be started.
    BSF     ADCON0, GO      ;Start A/D Conversion
            :               ;The ADIF bit will be
                            ;set and the GO/DONE bit
            :               ;cleared upon completion-
                            ;of the A/D conversion.
```

FIGURE 11-5: FLOWCHART OF A/D OPERATION

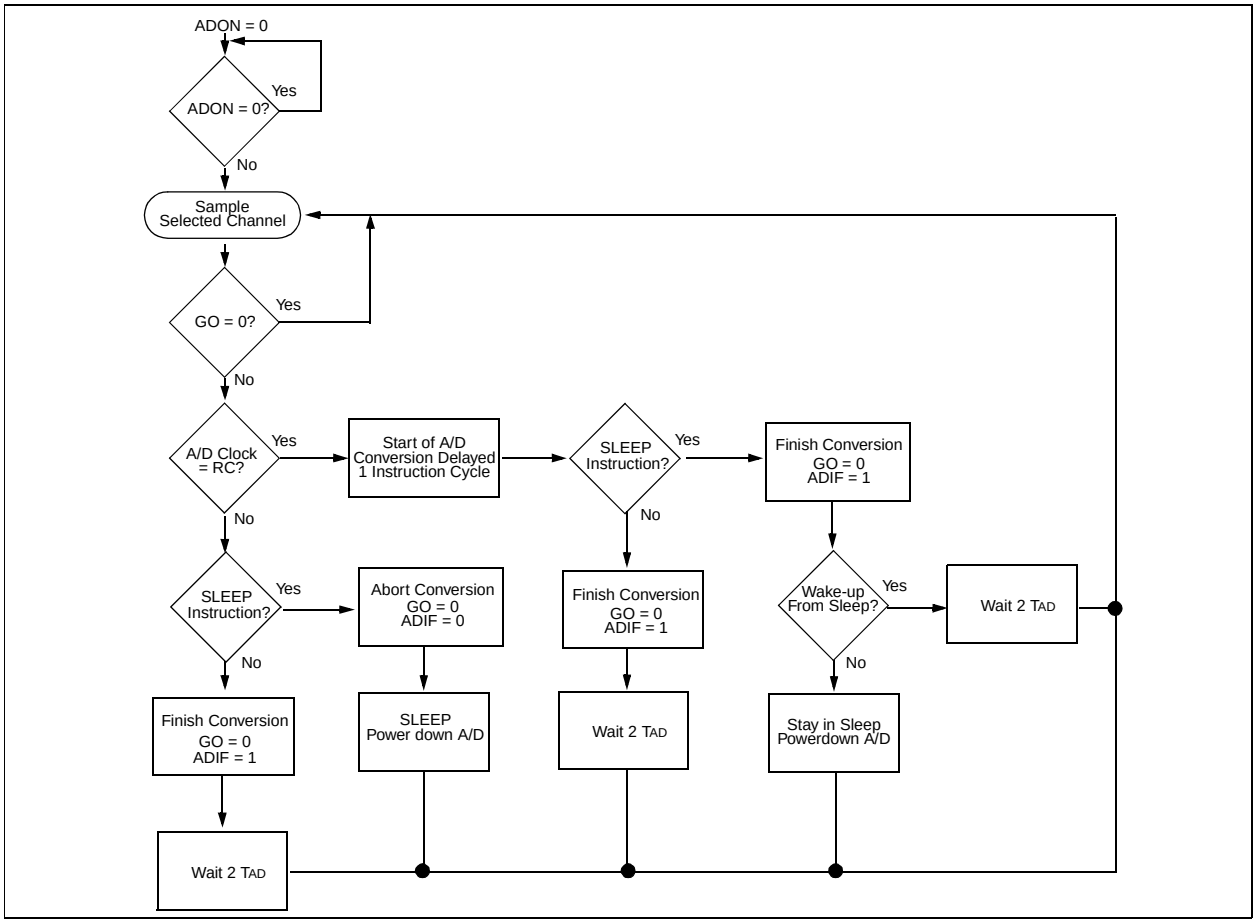

 © 1999 Microchip Technology Inc.

11.6 A/D Sample Requirements

11.6.1 RECOMMENDED SOURCE IMPEDANCE

The maximum recommended impedance for analog sources is 2.5 kΩ. This value is calculated based on the maximum leakage current of the input pin. The leakage current is 100 nA max., and the analog input voltage cannot be vary by more than 1/4 LSb or 250 mV due to leakage. This places a requirement on the input impedance of 250 µV/100 nA = 2.5 kΩ.

11.6.2 SAMPLING TIME CALCULATION

For the A/D converter to meet its specified accuracy, the charge holding capacitor (C_{HOLD}) must be allowed to fully charge to the input channel voltage level. The analog input model is shown in Figure 11-8. The source impedance (R_S) and the internal sampling switch (R_{SS}) impedance directly affect the time required to charge the capacitor C_{HOLD}. The sampling switch (R_{SS}) impedance varies over the device voltage (V_{DD}), see Figure 11-8. **The maximum recommended impedance for analog sources is 2.5 kΩ.** After the analog input channel is selected (changed) this sampling must be done before the conversion can be started.

To calculate the minimum sampling time, Equation 11-6 may be used. This equation assumes that 1/4 LSb error is used (16384 steps for the A/D). The 1/4 LSb error is the maximum error allowed for the A/D to meet its specified resolution.

The C_{HOLD} is assumed to be 25 pF for the 12-bit A/D.

FIGURE 11-6: A/D SAMPLING TIME EQUATION

$$V_{HOLD} = (V_{REF} - V_{REF}/16384) = (V_{REF}) \bullet (1 - e^{(-T_C/C\,(R_{IC} + R_{SS} + R_S))})\ \cancel{V_{REF}}(1 - 1/16384) = \cancel{V_{REF}} \bullet (1 - e^{(-T_C/C\,(R_{IC} + R_{SS} + R_S))})$$

$$T_C = -C_{HOLD}\,(1k\Omega + R_{SS} + R_S)\ \ln(1/16384)$$

Figure 11-7 shows the calculation of the minimum time required to charge C_{HOLD}. This calculation is based on the following system assumptions:

C_{HOLD} = 25 pF

R_S = 2.5 kΩ

1/4 LSb error

V_{DD} = 5V → R_{SS} = 10 kΩ (worst case)

Temp (system Max.) = 50°C

Note 1: The reference voltage (V_{REF}) has no effect on the equation, since it cancels itself out.

2: The charge holding capacitor (**C_{HOLD}**) is not discharged after each conversion.

3: The maximum recommended impedance for analog sources is 2.5 kΩ. This is required to meet the pin leakage specification.

4: After a conversion has completed, 2 T_{AD} time must be waited before sampling can begin again. During this time the holding capacitor is not connected to the selected A/D input channel.

FIGURE 11-7: CALCULATING THE MINIMUM REQUIRED SAMPLE TIME

T_{ACQ} = Amplifier Settling Time
+ Holding Capacitor Charging Time
+Temperature Coefficient †

T_{ACQ} = 5 µs
+ T_C
+ [(Temp - 25°C)(0.05 µs/°C)] †

T_C = + Holding Capacitor Charging Time
T_C = (C_{HOLD}) (R_{IC} + R_{SS} + R_S) In (1/16384)
T_C = -25 pF (1 kΩ +10 kΩ + 2.5 kΩ) In (1/16384)
T_C = -25 pF (13.5 kΩ) In (1/16384)
T_C = -0.338 (-9.704)µs
T_C = 3.3µs

T_{ACQ} = 5 µs
+ 3.3 µs
+ [(50°C - 25°C)(0.05 µs / °C)]

T_{ACQ} = 8.3 µs + 1.25 µs
T_{ACQ} = 9.55 µs

† The temperature coefficient is only required for temperatures > 25°C.

FIGURE 11-8: ANALOG INPUT MODEL

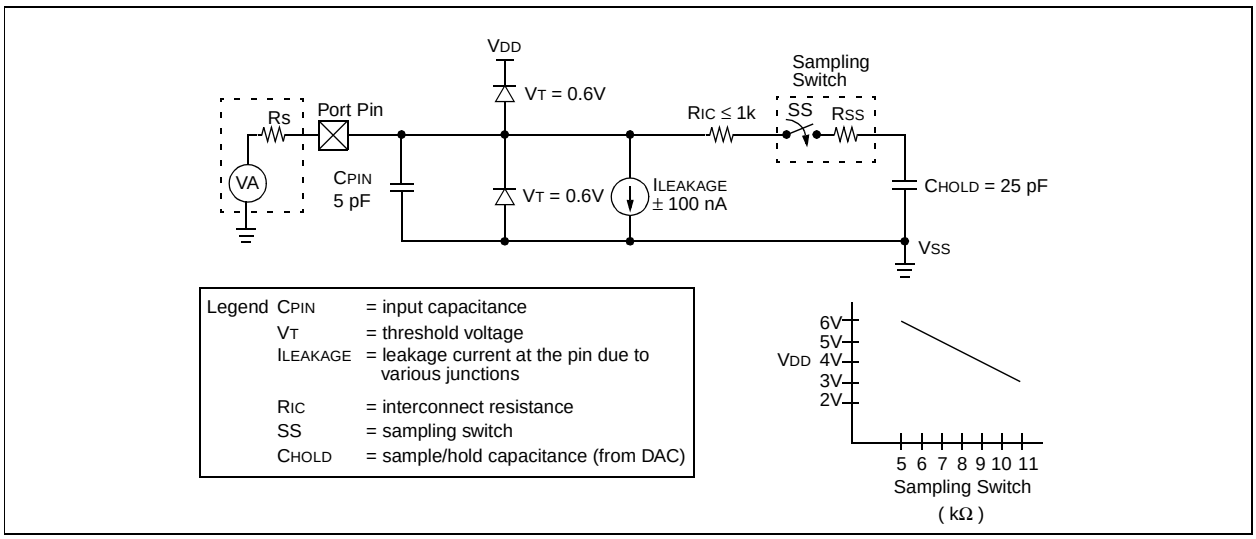

 © 1999 Microchip Technology Inc.

11.7 Use of the CCP Trigger

An A/D conversion can be started by the "special event trigger" of the CCP module. This requires that the CCPnM<3:0> bits be programmed as 1011b and that the A/D module is enabled (ADON is set). When the trigger occurs, the GO/DONE bit will be set on Q2 to start the A/D conversion and the Timer1 counter will be reset to zero. Timer1 is reset to automatically repeat the A/D conversion cycle, with minimal software overhead (moving the ADRESH and ADRESL to the desired location). The appropriate analog input channel must be selected before the "special event trigger" sets the GO/DONE bit (starts a conversion cycle).

If the A/D module is not enabled (ADON is cleared), then the "special event trigger" will be ignored by the A/D module, but will still reset the Timer1 counter.

11.8 Effects of a RESET

A device reset forces all registers to their reset state. This forces the A/D module to be turned off, and any conversion is aborted. The value that is in the ADRESH and ADRESL registers are not modified. The ADRESH and ADRESL registers will contain unknown data after a Power-on Reset.

11.9 Faster Conversion - Lower Resolution Trade-off

Not all applications require a result with 12-bits of resolution, but may instead require a faster conversion time. The A/D module allows users to make the trade-off of conversion speed to resolution. Regardless of the resolution required, the acquisition time is the same. To speed up the conversion, the A/D module may be halted by clearing the GO/DONE bit after the desired number of bits in the result have been converted. Once the GO/DONE bit has been cleared, all of the remaining A/D result bits are '0'. The equation to determine the time before the GO/DONE bit can be switched is as follows:

Conversion time = N•TAD + 1TAD

Where: N = number of bits of resolution required, and 1TAD is the amplifier settling time.

Since TAD is based from the device oscillator, the user must use some method (a timer, software loop, etc.) to determine when the A/D GO/DONE bit may be cleared. Table 11-2 shows a comparison of time required for a conversion with 4-bits of resolution, versus the normal 12-bit resolution conversion. The example is for devices operating at 20 MHz. The A/D clock is programmed for 32 TOSC.

TABLE 11-2 4-BIT vs. 12-BIT CONVERSION TIMES

	Freq. (MHz)	Resolution	
		4-bit	12-bit
Tosc	20	50 ns	50 ns
TAD = 32 Tosc	20	1.6 µs	1.6 µs
1TAD+N•TAD	20	8 µs	20.8 µs

11.10 A/D Operation During Sleep

The A/D module can operate during SLEEP mode. This requires that the A/D clock source be configured for RC (ADCS1:ADCS0 = 11b). With the RC clock source selected, when the GO/$\overline{\text{DONE}}$ bit is set the A/D module waits one instruction cycle before starting the conversion cycle. This allows the SLEEP instruction to be executed, which eliminates all digital switching noise during the sample and conversion. When the conversion cycle is completed the GO/$\overline{\text{DONE}}$ bit is cleared, and the result loaded into the ADRESH and ADRESL registers. If the A/D interrupt is enabled, the device will wake-up from SLEEP. If the A/D interrupt is not enabled, the A/D module will then be turned off, although the ADON bit will remain set.

When the A/D clock source is another clock option (not RC), a SLEEP instruction causes the present conversion to be aborted and the A/D module is turned off, though the ADON bit will remain set.

Turning off the A/D places the A/D module in its lowest current consumption state.

> **Note:** For the A/D module to operate in SLEEP, the A/D clock source must be configured to RC (ADCS1:ADCS0 = 11b).

11.11 Connection Considerations

Since the analog inputs employ ESD protection, they have diodes to VDD and VSS. This requires that the analog input must be between VDD and VSS. If the input voltage exceeds this range by greater than 0.3V (either direction), one of the diodes becomes forward biased and it may damage the device if the input current specification is exceeded.

An external RC filter is sometimes added for anti-aliasing of the input signal. The R component should be selected to ensure that the total source impedance is kept under the 2.5 kΩ recommended specification. Any external components connected (via hi-impedance) to an analog input pin (capacitor, zener diode, etc.) should have very little leakage current at the pin.

TABLE 11-3 SUMMARY OF A/D REGISTERS

Address	Name	Bit 7	Bit 6	Bit 5	Bit 4	Bit 3	Bit 2	Bit 1	Bit 0	Value on: POR, BOR	Value on all other Resets
0Bh,8Bh, 10Bh,18Bh	INTCON	GIE	PEIE	T0IE	INTE	RBIE	T0IF	INTF	RBIF	0000 000x	0000 000u
0Ch	PIR1	PSPIF(1)	ADIF	RCIF	TXIF	SSPIF	CCP1IF	TMR2IF	TMR1IF	0000 0000	0000 0000
8Ch	PIE1	PSPIE(1)	ADIE	RCIE	TXIE	SSPIE	CCP1IE	TMR2IE	TMR1IE	0000 0000	0000 0000
1Eh	ADRESH	A/D High Byte Result Register								xxxx xxxx	uuuu uuuu
9Eh	ADRESL	A/D Low Byte Result Register								xxxx xxxx	uuuu uuuu
9Bh	REFCON	VRHEN	VRLEN	VRHOEN	VRLOEN	—	—	—	—	0000 ----	0000 ----
1Fh	ADCON0	ADCS1	ADCS0	CHS2	CHS1	CHS0	GO/$\overline{\text{DONE}}$	CHS3	ADON	0000 0000	0000 0000
9Fh	ADCON1	ADFM	VCFG2	VCFG1	VCFG0	PCFG3	PCFG2	PCFG1	PCFG0	0000 0000	0000 0000
05h	PORTA	—	—	PORTA5(2)	PORTA Data Latch when written: PORTA<4:0> pins when read					--0x 0000	--0u 0000
06h	PORTB	PORTB Data Latch when written: PORTB pins when read								xxxx 11xx	uuuu 11uu
09h(2)	PORTE	—	—	—	—	—	RE2	RE1	RE0	---- -000	---- -000
85h	TRISA	—	—	bit5(2)	PORTA Data Direction Register					--11 1111	--11 1111
86h	TRISB	PORTB Data Direction Register								1111 1111	1111 1111
89h(2)	TRISE	IBF	OBF	IBOV	PSPMODE	—	PORTE Data Direction Bits			0000 -111	0000 -111

Legend: x = unknown, u = unchanged, - = unimplemented read as '0'. Shaded cells are not used for A/D conversion.
Note 1: Bits PSPIE and PSPIF are reserved on the 28-pin devices, always maintain these bits clear.
2: These bits/registers are not implemented on the 28-pin devices, read as '0'.

 © 1999 Microchip Technology Inc.

12.0 SPECIAL FEATURES OF THE CPU

These PICmicro devices have a host of features intended to maximize system reliability, minimize cost through elimination of external components, provide power saving operating modes and offer code protection. These are:

- Oscillator Selection
- Reset
  - Power-on Reset (POR)
  - Power-up Timer (PWRT)
  - Oscillator Start-up Timer (OST)
  - Brown-out Reset (BOR)
- Interrupts
- Watchdog Timer (WDT)
- Low-voltage detection
- SLEEP
- Code protection
- ID locations
- In-circuit serial programming

These devices have a Watchdog Timer which can be shut off only through configuration bits. It runs off its own RC oscillator for added reliability. There are two timers that offer necessary delays on power-up. One is the Oscillator Start-up Timer (OST), intended to keep the chip in reset until the crystal oscillator is stable. The other is the Power-up Timer (PWRT), which provides a fixed delay of 72 ms (nominal) on power-up type resets only (POR, BOR), designed to keep the part in reset while the power supply stabilizes. With these two timers on-chip, most applications need no external reset circuitry.

SLEEP mode is designed to offer a very low current power-down mode. The user can wake-up from SLEEP through external reset, Watchdog Timer Wake-up, or through an interrupt. Several oscillator options are also made available to allow the part to fit the application. The RC oscillator option saves system cost while the LP crystal option saves power. A set of configuration bits are used to select various options.

Additional information on special features is available in the PICmicro™ Mid-Range Reference Manual, (DS33023).

12.1 Configuration Bits

The configuration bits can be programmed (read as '0') or left unprogrammed (read as '1') to select various device configurations. These bits are mapped in program memory location 2007h.

The user will note that address 2007h is beyond the user program memory space. In fact, it belongs to the special test/configuration memory space (2000h - 3FFFh), which can be accessed only during programming.

Some of the core features provided may not be necessary to each application that a device may be used for. The configuration word bits allow these features to be configured/enabled/disabled as necessary. These features include code protection, brown-out reset and its trippoint, the power-up timer, the watchdog timer and the devices oscillator mode. As can be seen in Figure 12-1, some additional configuration word bits have been provided for brown-out reset trippoint selection.

FIGURE 12-1: CONFIGURATION WORD

CP1	CP0	BORV1	BORV0	CP1	CP0	-	BODEN	CP1	CP0	$\overline{\text{PWRTE}}$	WDTE	FOSC1	FOSC0
bit13	12	11	10	9	8	7	6	5	4	3	2	1	bit0

Register: CONFIG
Address 2007h

bit 13-12: **CP1:CP0: Code Protection bits** (2)
bit 9-8: 11 = Program memory code protection off
bit 5-4: 10 = 0800h-0FFFh code protected
01 = 0400h-0FFFh code protected
00 = 0000h-0FFFh code protected

bit 11-10: **BORV1:BORV0**: Brown-out Reset Voltage bits(3)
11 = VBOR set to 2.5V
10 = VBOR set to 2.7V
01 = VBOR set to 4.2V
00 = VBOR set to 4.5V

bit 7: **Unimplemented**, Read as '1'

bit 6: **BODEN**: Brown-out Reset Enable bit (1)
1 = Brown-out Reset enabled
0 = Brown-out Reset disabled

bit 3: **$\overline{\text{PWRTE}}$**: Power-up Timer Enable bit (1)
1 = PWRT disabled
0 = PWRT enabled

bit 2: **WDTE**: Watchdog Timer Enable bit
1 = WDT enabled
0 = WDT disabled

bit 1-0: **FOSC1:FOSC0**: Oscillator Selection bits
11 = RC oscillator
10 = HS oscillator
01 = XT oscillator
00 = LP oscillator

Note 1: Enabling Brown-out Reset automatically enables the Power-up Timer (PWRT) regardless of the value of bit $\overline{\text{PWRTE}}$. Ensure the Power-up Timer is enabled anytime Brown-out Reset is enabled.
2: All of the CP1:CP0 pairs have to be given the same value to enable the code protection scheme listed.
3: These are the minimum trip points for the BOR, see Table 15-4 for the trip point tolerances. Selection of an unused setting may result in an inadvertant interrupt.

12.2 Oscillator Configurations

12.2.1 OSCILLATOR TYPES

The PIC16C77X can be operated in four different oscillator modes. The user can program two configuration bits (FOSC1 and FOSC0) to select one of these four modes:

- LP Low Power Crystal
- XT Crystal/Resonator
- HS High Speed Crystal/Resonator
- RC Resistor/Capacitor

12.2.2 CRYSTAL OSCILLATOR/CERAMIC RESONATORS

In XT, LP or HS modes, a crystal or ceramic resonator is connected to the OSC1/CLKIN and OSC2/CLKOUT pins to establish oscillation (Figure 12-2). The PIC16C77X oscillator design requires the use of a parallel cut crystal. Use of a series cut crystal may give a frequency out of the crystal manufacturers specifications.

A difference from the other mid-range devices may be noted in that the device can be driven from an external clock only when configured in HS mode (Figure 12-3).

 © 1999 Microchip Technology Inc.

FIGURE 12-2: CRYSTAL/CERAMIC RESONATOR OPERATION (HS, XT OR LP OSC CONFIGURATION)

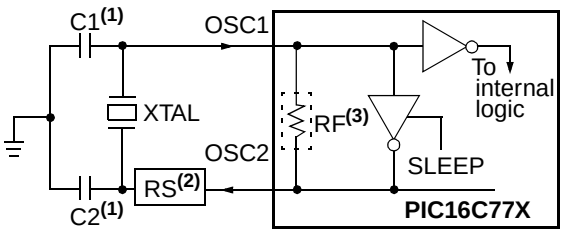

Note1: See Table 12-1 and Table 12-2 for recommended values of C1 and C2.
2: A series resistor (RS) may be required for AT strip cut crystals.
3: RF varies with the crystal chosen.

FIGURE 12-3: EXTERNAL CLOCK INPUT OPERATION (HS OSC CONFIGURATION)

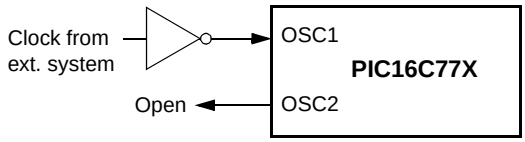

TABLE 12-1 CERAMIC RESONATORS

Ranges Tested:			
Mode	**Freq**	**OSC1**	**OSC2**
XT	455 kHz 2.0 MHz 4.0 MHz	68 - 100 pF 15 - 68 pF 15 - 68 pF	68 - 100 pF 15 - 68 pF 15 - 68 pF
HS	8.0 MHz 16.0 MHz	10 - 68 pF 10 - 22 pF	10 - 68 pF 10 - 22 pF
These values are for design guidance only. See notes at bottom of page.			
Resonators Used:			
455 kHz	Panasonic EFO-A455K04B	± 0.3%	
2.0 MHz	Murata Erie CSA2.00MG	± 0.5%	
4.0 MHz	Murata Erie CSA4.00MG	± 0.5%	
8.0 MHz	Murata Erie CSA8.00MT	± 0.5%	
16.0 MHz	Murata Erie CSA16.00MX	± 0.5%	
All resonators used did not have built-in capacitors.			

TABLE 12-2 CAPACITOR SELECTION FOR CRYSTAL OSCILLATOR

Osc Type	Crystal Freq	Cap. Range C1	Cap. Range C2
LP	32 kHz	33 pF	33 pF
	200 kHz	15 pF	15 pF
XT	200 kHz	47-68 pF	47-68 pF
	1 MHz	15 pF	15 pF
	4 MHz	15 pF	15 pF
HS	4 MHz	15 pF	15 pF
	8 MHz	15-33 pF	15-33 pF
	20 MHz	15-33 pF	15-33 pF
These values are for design guidance only. See notes at bottom of page.			
Crystals Used			
32 kHz	Epson C-001R32.768K-A	± 20 PPM	
200 kHz	STD XTL 200.000KHz	± 20 PPM	
1 MHz	ECS ECS-10-13-1	± 50 PPM	
4 MHz	ECS ECS-40-20-1	± 50 PPM	
8 MHz	EPSON CA-301 8.000M-C	± 30 PPM	
20 MHz	EPSON CA-301 20.000M-C	± 30 PPM	

Note 1: Recommended values of C1 and C2 are identical to the ranges tested (Table 12-1).
2: Higher capacitance increases the stability of oscillator but also increases the start-up time.
3: Since each resonator/crystal has its own characteristics, the user should consult the resonator/crystal manufacturer for appropriate values of external components.
4: Rs may be required in HS mode as well as XT mode to avoid overdriving crystals with low drive level specification.

12.2.3 RC OSCILLATOR

For timing insensitive applications the “RC” device option offers additional cost savings. The RC oscillator frequency is a function of the supply voltage, the resistor (REXT) and capacitor (CEXT) values, and the operating temperature. In addition to this, the oscillator frequency will vary from unit to unit due to normal process parameter variation. Furthermore, the difference in lead frame capacitance between package types will also affect the oscillation frequency, especially for low CEXT values. These factors and the variation due to tolerances of external R and C components used need to be taken into account for each application. Figure 12-4 shows how the R/C combination is connected to the PIC16C77X.

FIGURE 12-4: RC OSCILLATOR MODE

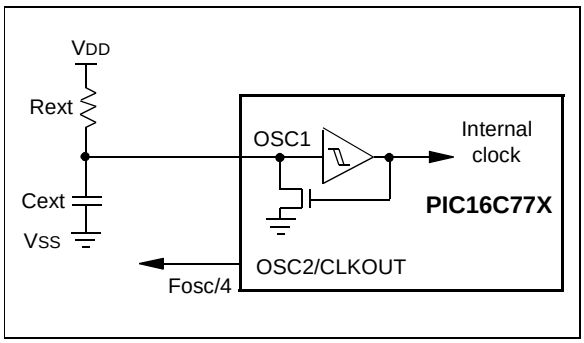

 © 1999 Microchip Technology Inc.

12.3 Reset

The PIC16C77X devices have several different resets. These resets are grouped into two classifications; power-up and non-power-up. The power-up type resets are the power-on and brown-out resets which assume the device VDD was below its normal operating range for the device's configuration. The non-power up type resets assume normal operating limits were maintained before/during and after the reset.

- Power-on Reset (POR)
- Brown-out Reset (BOR)
- $\overline{\text{MCLR}}$ reset during normal operation
- $\overline{\text{MCLR}}$ reset during SLEEP
- WDT Reset (during normal operation)

Some registers are not affected in any reset condition. Their status is unknown on a power-up reset and unchanged in any other reset. Most other registers are placed into an initialized state upon reset, however they are not affected by a WDT reset during sleep because this is considered a WDT Wakeup, which is viewed as the resumption of normal operation.

Several status bits have been provided to indicate which reset occurred (see Table 12-4). See Table 12-6 for a full description of reset states of all registers.

A simplified block diagram of the on-chip reset circuit is shown in Figure 12-5.

These devices have a $\overline{\text{MCLR}}$ noise filter in the $\overline{\text{MCLR}}$ reset path. The filter will detect and ignore small pulses.

It should be noted that a WDT Reset does not drive $\overline{\text{MCLR}}$ pin low.

FIGURE 12-5: SIMPLIFIED BLOCK DIAGRAM OF ON-CHIP RESET CIRCUIT

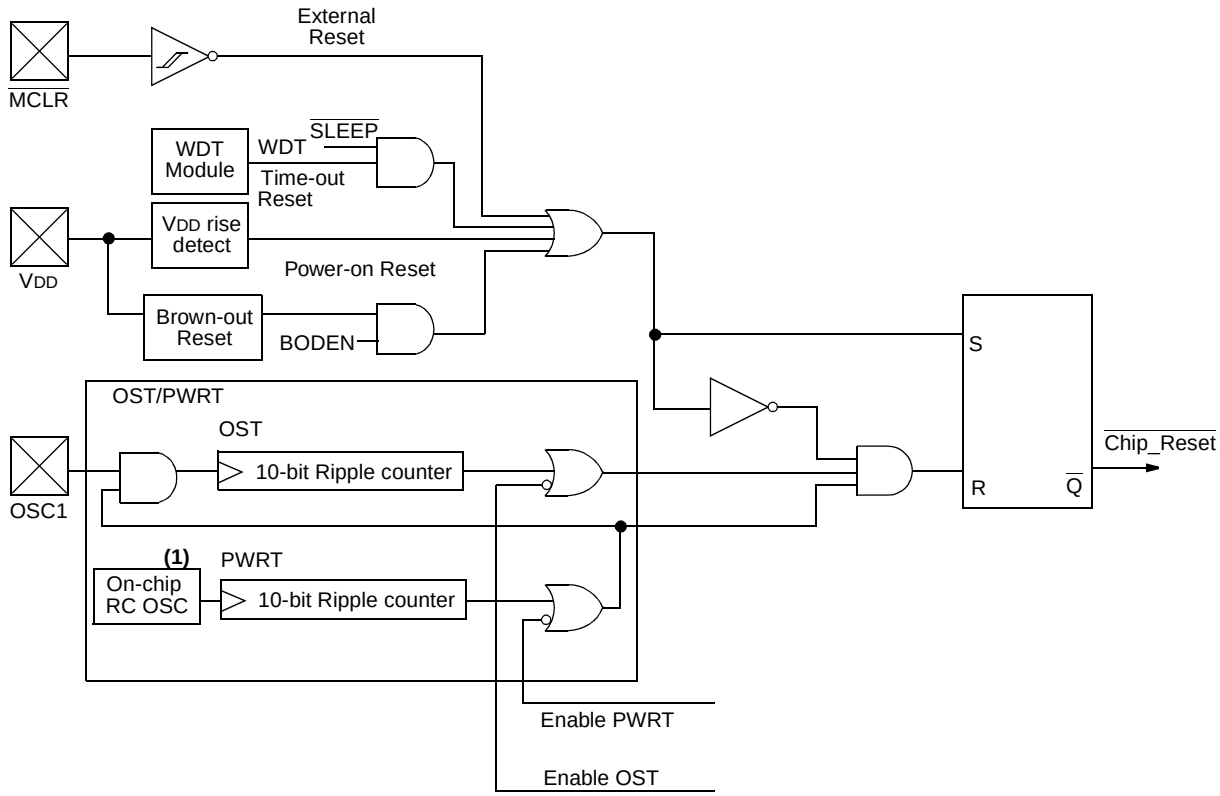

Note 1: This is a separate oscillator from the RC oscillator of the CLKIN pin.

12.4 Power-On Reset (POR)

A Power-on Reset pulse is generated on-chip when VDD rise is detected (in the range of 1.5V - 2.1V). To take advantage of the POR, just tie the MCLR pin directly (or through a resistor) to VDD. This will eliminate external RC components usually needed to create a Power-on Reset. A maximum rise time for VDD is specified. See Electrical Specifications for details. For a slow rise time, see Figure 12-6.

Two delay timers have been provided which hold the device in reset after a POR (dependant upon device configuration) so that all operational parameters have been met prior to releasing to device to resume/begin normal operation.

When the device starts normal operation (exits the reset condition), device operating parameters (voltage, frequency, temperature,...) must be met to ensure operation. If these conditions are not met, the device must be held in reset until the operating conditions are met. Brown-out Reset may be used to meet the startup conditions, or if necessary an external POR circuit may be implemented to delay end of reset for as long as needed.

FIGURE 12-6: EXTERNAL POWER-ON RESET CIRCUIT (FOR SLOW VDD POWER-UP)

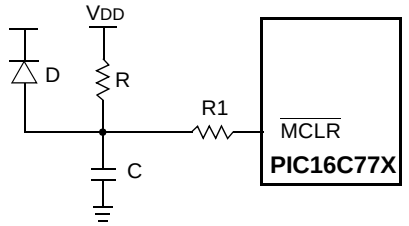

Note 1: External Power-on Reset circuit is required only if VDD power-up slope is too slow. The diode D helps discharge the capacitor quickly when VDD powers down.

2: R < 40 kΩ is recommended to make sure that voltage drop across R does not violate the device's electrical specification.

3: R1 = 100Ω to 1 kΩ will limit any current flowing into MCLR from external capacitor C in the event of MCLR/VPP pin breakdown due to Electrostatic Discharge (ESD) or Electrical Overstress (EOS).

12.5 Power-up Timer (PWRT)

The Power-up Timer provides a fixed 72 ms nominal time-out on power-up type resets only. For a POR, the PWRT is invoked when the POR pulse is generated. For a BOR, the PWRT is invoked when the device exits the reset condition (VDD rises above BOR trippoint). The Power-up Timer operates on an internal RC oscillator. The chip is kept in reset as long as the PWRT is active. The PWRT's time delay is designed to allow VDD to rise to an acceptable level. A configuration bit is provided to enable/disable the PWRT for the POR only. For a BOR the PWRT is always available regardless of the configuration bit setting.

The power-up time delay will vary from chip to chip due to VDD, temperature, and process variation. See DC parameters for details.

12.6 Oscillator Start-up Timer (OST)

The Oscillator Start-up Timer (OST) provides 1024 oscillator cycle (from OSC1 input) delay after the PWRT delay is over. This ensures that the crystal oscillator or resonator has started and stabilized.

The OST time-out is invoked only for XT, LP and HS modes and only on a power-up type reset or a wake-up from SLEEP.

12.7 Brown-Out Reset (BOR)

The Brown-out Reset module is used to generate a reset when the supply voltage falls below a specified trip voltage. The trip voltage is configurable to any one of four voltages provided by the BORV1:BORV0 configuration word bits.

Configuration bit, BODEN, can disable (if clear/programmed) or enable (if set) the Brown-out Reset circuitry. If VDD falls below the specified trippoint for greater than parameter #35 in the electrical specifications section, the brown-out situation will reset the chip. A reset may not occur if VDD falls below the trippoint for less than parameter #35. The chip will remain in Brown-out Reset until VDD rises above BVDD. The Power-up Timer will be invoked at that point and will keep the chip in RESET an additional 72 ms. If VDD drops below BVDD while the Power-up Timer is running, the chip will go back into a Brown-out Reset and the Power-up Timer will be re-initialized. Once VDD rises above BVDD, the Power-up Timer will again begin a 72 ms time delay. Even though the PWRT is always enabled when brown-out is enabled, the PWRT configuration word bit should be cleared (enabled) when brown-out is enabled.

 © 1999 Microchip Technology Inc.

12.8 Time-out Sequence

On power-up the time-out sequence is as follows: First PWRT time-out is invoked by the POR pulse. When the PWRT delay expires the Oscillator Start-up Timer is activated. The total time-out will vary based on oscillator configuration and the status of the PWRT. For example, in RC mode with the PWRT disabled, there will be no time-out at all. Figure 12-7, Figure 12-8, Figure 12-9 and Figure 12-10 depict time-out sequences on power-up.

Since the time-outs occur from the POR pulse, if $\overline{\text{MCLR}}$ is kept low long enough, the time-outs will expire. Then bringing $\overline{\text{MCLR}}$ high will begin execution immediately (Figure 12-9). This is useful for testing purposes or to synchronize more than one PICmicro microcontroller operating in parallel.

Table 12-5 shows the reset conditions for some special function registers, while Table 12-6 shows the reset conditions for all the registers.

12.9 Power Control/Status Register (PCON)

The Power Control/Status Register, PCON has two status bits that provide indication of which power-up type reset occurred.

Bit0 is Brown-out Reset Status bit, $\overline{\text{BOR}}$. Bit $\overline{\text{BOR}}$ is set on a Power-on Reset. It must then be set by the user and checked on subsequent resets to see if bit $\overline{\text{BOR}}$ cleared, indicating a BOR occurred. However, if the brown-out circuitry is disabled, the $\overline{\text{BOR}}$ bit is a "Don't Care" bit and is considered unknown upon a POR.

Bit1 is $\overline{\text{POR}}$ (Power-on Reset Status bit). It is cleared on a Power-on Reset and unaffected otherwise. The user must set this bit following a Power-on Reset.

TABLE 12-3 TIME-OUT IN VARIOUS SITUATIONS

Oscillator Configuration	Power-up		Brown-out	Wake-up from SLEEP
	$\overline{\text{PWRTE}}$ = 0	$\overline{\text{PWRTE}}$ = 1		
XT, HS, LP	72 ms + 1024TOSC	1024TOSC	72 ms + 1024TOSC	1024TOSC
RC	72 ms	—	72 ms	—

TABLE 12-4 STATUS BITS AND THEIR SIGNIFICANCE

$\overline{\text{POR}}$	$\overline{\text{BOR}}$	$\overline{\text{TO}}$	$\overline{\text{PD}}$	
0	1	1	1	Power-on Reset
0	x	0	x	Illegal, $\overline{\text{TO}}$ is set on $\overline{\text{POR}}$
0	x	x	0	Illegal, $\overline{\text{PD}}$ is set on $\overline{\text{POR}}$
1	0	1	1	Brown-out Reset
1	1	0	1	WDT Reset
1	1	0	0	WDT Wake-up
1	1	u	u	$\overline{\text{MCLR}}$ Reset during normal operation
1	1	1	0	$\overline{\text{MCLR}}$ Reset during SLEEP or interrupt wake-up from SLEEP

TABLE 12-5 RESET CONDITION FOR SPECIAL REGISTERS

Condition	Program Counter	STATUS Register	PCON Register
Power-on Reset	000h	0001 1xxx	---- --01
$\overline{\text{MCLR}}$ Reset during normal operation	000h	000u uuuu	---- --uu
$\overline{\text{MCLR}}$ Reset during SLEEP	000h	0001 0uuu	---- --uu
WDT Reset	000h	0000 1uuu	---- --uu
WDT Wake-up	PC + 1	uuu0 0uuu	---- --uu
Brown-out Reset	000h	0001 1uuu	---- --u0
Interrupt wake-up from SLEEP	PC + 1(1)	uuu1 0uuu	---- --uu

Legend: u = unchanged, x = unknown, - = unimplemented bit read as '0'.

Note 1: When the wake-up is due to an interrupt and the GIE bit is set, the PC is loaded with the interrupt vector (0004h).

TABLE 12-6 INITIALIZATION CONDITIONS FOR ALL REGISTERS

Register	Devices		Power-on Reset, Brown-out Reset	$\overline{\text{MCLR}}$ Resets WDT Reset	Wake-up via WDT or Interrupt
W	773	774	xxxx xxxx	uuuu uuuu	uuuu uuuu
INDF	773	774	N/A	N/A	N/A
TMR0	773	774	xxxx xxxx	uuuu uuuu	uuuu uuuu
PCL	773	774	0000h	0000h	PC + 1(2)
STATUS	773	774	0001 1xxx	000q quuu(3)	uuuq quuu(3)
FSR	773	774	xxxx xxxx	uuuu uuuu	uuuu uuuu
PORTA	773	774	--0x 0000	--0u 0000	--uu uuuu
PORTB	773	774	xxxx 11xx	uuuu 11uu	uuuu uuuu
PORTC	773	774	xxxx xxxx	uuuu uuuu	uuuu uuuu
PORTD	773	774	xxxx xxxx	uuuu uuuu	uuuu uuuu
PORTE	773	774	---- -000	---- -000	---- -uuu
PCLATH	773	774	---0 0000	---0 0000	---u uuuu
INTCON	773	774	0000 000x	0000 000u	uuuu uuuu(1)
PIR1	773	774	r000 0000	r000 0000	ruuu uuuu(1)
	773	774	0000 0000	0000 0000	uuuu uuuu(1)
PIR2	773	774	0--- 0--0	0--- 0--0	u--- u--u(1)
TMR1L	773	774	xxxx xxxx	uuuu uuuu	uuuu uuuu
TMR1H	773	774	xxxx xxxx	uuuu uuuu	uuuu uuuu
T1CON	773	774	--00 0000	--uu uuuu	--uu uuuu
TMR2	773	774	0000 0000	0000 0000	uuuu uuuu
T2CON	773	774	-000 0000	-000 0000	-uuu uuuu
SSPBUF	773	774	xxxx xxxx	uuuu uuuu	uuuu uuuu
SSPCON	773	774	0000 0000	0000 0000	uuuu uuuu
CCPR1L	773	774	xxxx xxxx	uuuu uuuu	uuuu uuuu
CCPR1H	773	774	xxxx xxxx	uuuu uuuu	uuuu uuuu
CCP1CON	773	774	--00 0000	--00 0000	--uu uuuu
RCSTA	773	774	0000 000x	0000 000x	uuuu uuuu
TXREG	773	774	0000 0000	0000 0000	uuuu uuuu
RCREG	773	774	0000 0000	0000 0000	uuuu uuuu
CCPR2L	773	774	xxxx xxxx	uuuu uuuu	uuuu uuuu
CCPR2H	773	774	xxxx xxxx	uuuu uuuu	uuuu uuuu
CCP2CON	773	774	--00 0000	--00 0000	--uu uuuu
ADRESH	773	774	xxxx xxxx	uuuu uuuu	uuuu uuuu
ADCON0	773	774	0000 0000	0000 0000	uuuu uuuu
OPTION_REG	773	774	1111 1111	1111 1111	uuuu uuuu

Legend: u = unchanged, x = unknown, - = unimplemented bit, read as '0', q = value depends on condition

Note 1: One or more bits in INTCON, PIR1 and/or PIR2 will be affected (to cause wake-up).

2: When the wake-up is due to an interrupt and the GIE bit is set, the PC is loaded with the interrupt vector (0004h).

3: See Table 12-5 for reset value for specific condition.

 © 1999 Microchip Technology Inc.

TABLE 12-6 INITIALIZATION CONDITIONS FOR ALL REGISTERS (Cont.'d)

Register	Devices		Power-on Reset, Brown-out Reset	$\overline{\text{MCLR}}$ Resets WDT Reset	Wake-up via WDT or Interrupt
TRISA	773	774	---1 1111	---1 1111	---u uuuu
	773	774	--11 1111	--11 1111	--uu uuuu
TRISB	773	774	1111 1111	1111 1111	uuuu uuuu
TRISC	773	774	1111 1111	1111 1111	uuuu uuuu
TRISD	773	774	1111 1111	1111 1111	uuuu uuuu
TRISE	773	774	0000 -111	0000 -111	uuuu -uuu
PIE1	773	774	r000 0000	r000 0000	ruuu uuuu
	773	774	0000 0000	0000 0000	uuuu uuuu
PIE2	773	774	0--- 0--0	0--- 0--0	u--- u--u
PCON	773	774	---- --qq	---- --uu	---- --uu
PR2	773	774	1111 1111	1111 1111	1111 1111
SSPADD	773	774	0000 0000	0000 0000	uuuu uuuu
SSPSTAT	773	774	0000 0000	0000 0000	uuuu uuuu
TXSTA	773	774	0000 -010	0000 -010	uuuu -uuu
SPBRG	773	774	0000 0000	0000 0000	uuuu uuuu
REFCON	773	774	0000 ----	0000 ----	uuuu ----
LVDCON	773	774	--00 0101	--00 0101	--uu uuuu
ADRESL	773	774	xxxx xxxx	uuuu uuuu	uuuu uuuu
ADCON1	773	774	0000 000	0000 0000	uuuu uuuu

Legend: u = unchanged, x = unknown, - = unimplemented bit, read as '0', q = value depends on condition

Note 1: One or more bits in INTCON, PIR1 and/or PIR2 will be affected (to cause wake-up).

2: When the wake-up is due to an interrupt and the GIE bit is set, the PC is loaded with the interrupt vector (0004h).

3: See Table 12-5 for reset value for specific condition.

FIGURE 12-7: TIME-OUT SEQUENCE ON POWER-UP ($\overline{\text{MCLR}}$ TIED TO V_{DD})

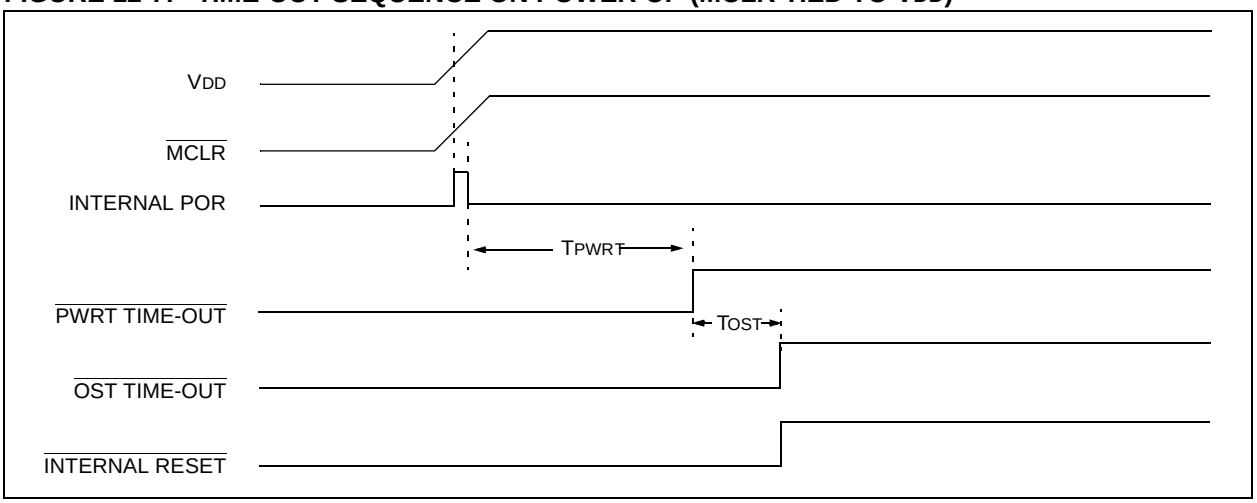

FIGURE 12-8: TIME-OUT SEQUENCE ON POWER-UP ($\overline{MCLR}$ NOT TIED TO VDD): CASE 1

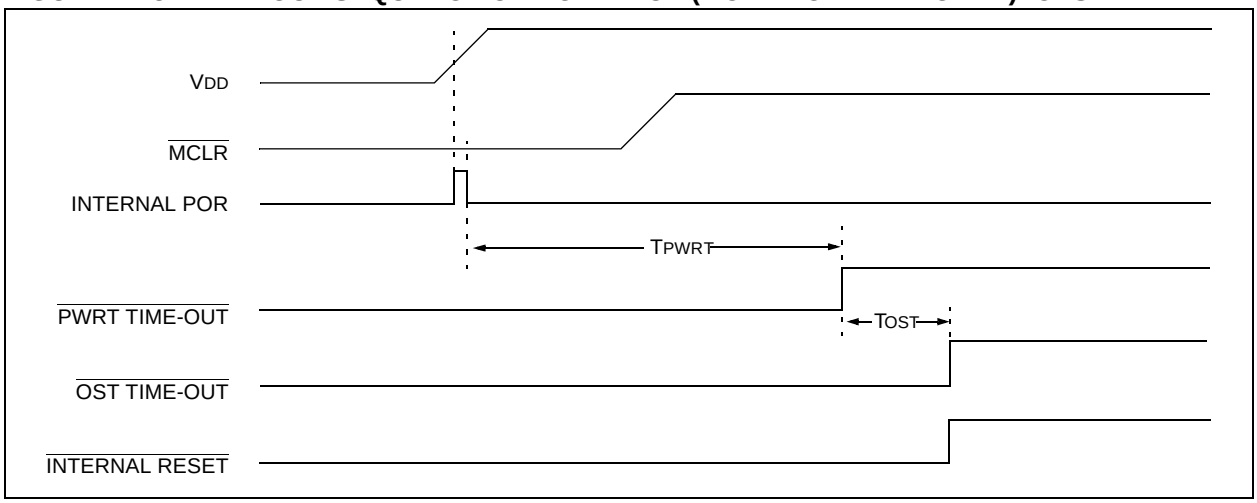

FIGURE 12-9: TIME-OUT SEQUENCE ON POWER-UP ($\overline{MCLR}$ NOT TIED TO VDD): CASE 2

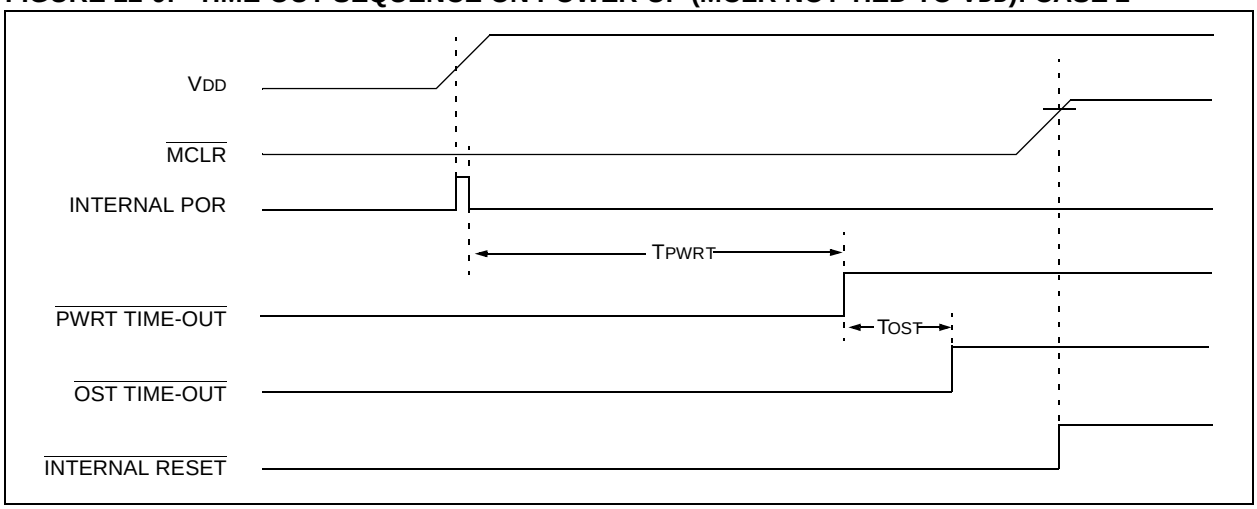

FIGURE 12-10: SLOW RISE TIME ($\overline{MCLR}$ TIED TO VDD)

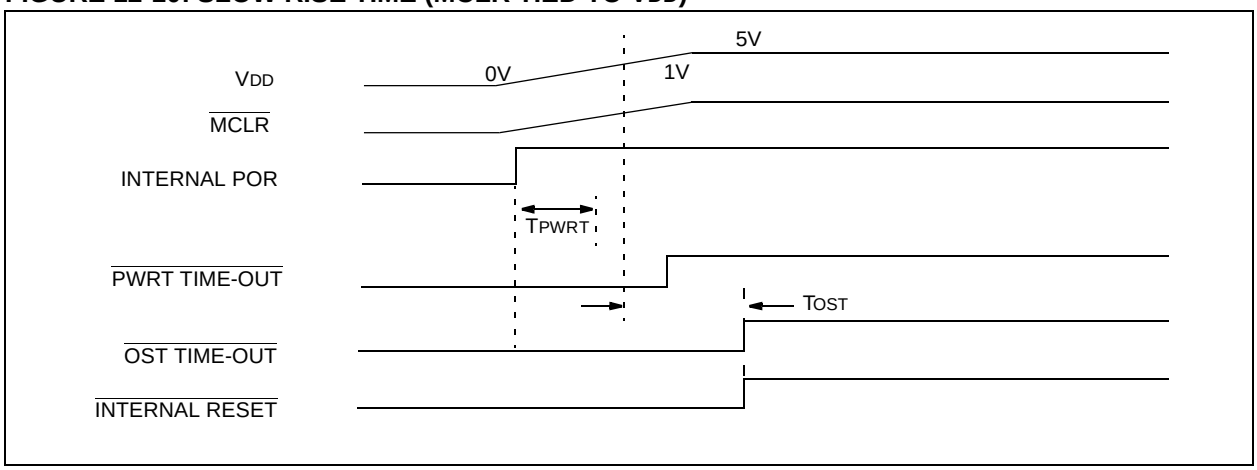

 © 1999 Microchip Technology Inc.

12.10 Interrupts

The PIC16C77X family has up to 14 sources of interrupt. The interrupt control register (INTCON) records individual interrupt requests in flag bits. It also has individual and global interrupt enable bits.

Note:	Individual interrupt flag bits are set regardless of the status of their corresponding mask bit or the GIE bit.

A global interrupt enable bit, GIE (INTCON<7>) enables (if set) all un-masked interrupts or disables (if cleared) all interrupts. When bit GIE is enabled, and an interrupt's flag bit and mask bit are set, the interrupt will vector immediately. Individual interrupts can be disabled through their corresponding enable bits in various registers. Individual interrupt bits are set regardless of the status of the GIE bit. The GIE bit is cleared on reset.

The "return from interrupt" instruction, `RETFIE`, exits the interrupt routine as well as sets the GIE bit, which re-enables interrupts.

The RB0/INT pin interrupt, the RB port change interrupt and the TMR0 overflow interrupt flags are contained in the INTCON register.

The peripheral interrupt flags are contained in the special function registers PIR1 and PIR2. The corresponding interrupt enable bits are contained in special function registers PIE1 and PIE2, and the peripheral interrupt enable bit is contained in special function register INTCON.

When an interrupt is responded to, the GIE bit is cleared to disable any further interrupt, the return address is pushed onto the stack and the PC is loaded with 0004h. Once in the interrupt service routine the source(s) of the interrupt can be determined by polling the interrupt flag bits. The interrupt flag bit(s) must be cleared in software before re-enabling interrupts to avoid recursive interrupts.

For external interrupt events, such as the INT pin or PORTB change interrupt, the interrupt latency will be three or four instruction cycles. The exact latency depends when the interrupt event occurs. The latency is the same for one or two cycle instructions. Individual interrupt flag bits are set regardless of the status of their corresponding mask bit or the GIE bit

FIGURE 12-11: INTERRUPT LOGIC

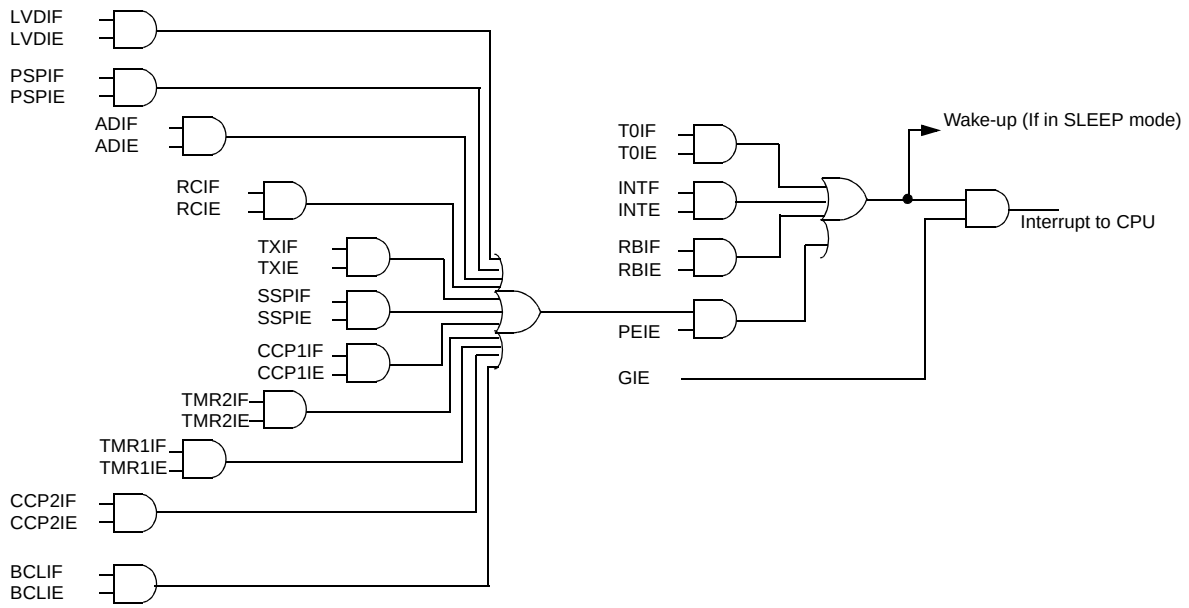

The following table shows which devices have which interrupts.

Device	T0IF	INTF	RBIF	PSPIF	ADIF	RCIF	TXIF	SSPIF	CCP1IF	TMR2IF	TMR1IF	LVDIF	BCLIF	CCP2IF
PIC16C773	Yes	Yes	Yes	-	Yes	Yes	Yes	Yes	Yes	Yes	Yes	Yes	Yes	Yes
PIC16C774	Yes	Yes	Yes	Yes	Yes	Yes	Yes	Yes	Yes	Yes	Yes	Yes	Yes	Yes

12.10.1 INT INTERRUPT

External interrupt on RB0/INT pin is edge triggered: either rising if bit INTEDG (OPTION_REG<6>) is set, or falling, if the INTEDG bit is clear. When a valid edge appears on the RB0/INT pin, flag bit INTF (INTCON<1>) is set. This interrupt can be disabled by clearing enable bit INTE (INTCON<4>). Flag bit INTF must be cleared in software in the interrupt service routine before re-enabling this interrupt. The INT interrupt can wake-up the processor from SLEEP, if bit INTE was set prior to going into SLEEP. The status of global interrupt enable bit GIE decides whether or not the processor branches to the interrupt vector following wake-up. See Section 12.13 for details on SLEEP mode.

12.10.2 TMR0 INTERRUPT

An overflow (FFh → 00h) in the TMR0 register will set flag bit T0IF (INTCON<2>). The interrupt can be enabled/disabled by setting/clearing enable bit T0IE (INTCON<5>). (Section 4.0)

12.10.3 PORTB INTCON CHANGE

An input change on PORTB<7:4> sets flag bit RBIF (INTCON<0>). The interrupt can be enabled/disabled by setting/clearing enable bit RBIE (INTCON<4>). (Section 3.2)

12.11 Context Saving During Interrupts

During an interrupt, only the return PC value is saved on the stack. Typically, users may wish to save key registers during an interrupt, i.e., W register and STATUS register. This will have to be implemented in software.

Example 12-1 stores and restores the W and STATUS registers. The register, W_TEMP, must be defined in each bank and must be defined at the same offset from the bank base address (i.e., if W_TEMP is defined at 0x20 in bank 0, it must also be defined at 0xA0 in bank 1).

The example:

a) Stores the W register.
b) Stores the STATUS register in bank 0.
c) Stores the PCLATH register.
d) Executes the interrupt service routine code (User-generated).
e) Restores the STATUS register (and bank select bit).
f) Restores the W and PCLATH registers.

EXAMPLE 12-1: SAVING STATUS, W, AND PCLATH REGISTERS IN RAM

```
MOVWF    W_TEMP           ;Copy W to TEMP register, could be bank one or zero
SWAPF    STATUS,W         ;Swap status to be saved into W
CLRF     STATUS           ;bank 0, regardless of current bank, Clears IRP,RP1,RP0
MOVWF    STATUS_TEMP      ;Save status to bank zero STATUS_TEMP register
MOVF     PCLATH, W        ;Only required if using pages 1, 2 and/or 3
MOVWF    PCLATH_TEMP      ;Save PCLATH into W
CLRF     PCLATH           ;Page zero, regardless of current page
BCF      STATUS, IRP      ;Return to Bank 0
MOVF     FSR, W           ;Copy FSR to W
MOVWF    FSR_TEMP         ;Copy FSR from W to FSR_TEMP
:
:(ISR)
:
MOVF     PCLATH_TEMP, W   ;Restore PCLATH
MOVWF    PCLATH           ;Move W into PCLATH
SWAPF    STATUS_TEMP,W    ;Swap STATUS_TEMP register into W
                          ;(sets bank to original state)
MOVWF    STATUS           ;Move W into STATUS register
SWAPF    W_TEMP,F         ;Swap W_TEMP
SWAPF    W_TEMP,W         ;Swap W_TEMP into W
```

 © 1999 Microchip Technology Inc.

12.12 Watchdog Timer (WDT)

The Watchdog Timer is as a free running on-chip RC oscillator which does not require any external components. This RC oscillator is separate from the RC oscillator of the OSC1/CLKIN pin. That means that the WDT will run, even if the clock on the OSC1/CLKIN and OSC2/CLKOUT pins of the device has been stopped, for example, by execution of a SLEEP instruction.

During normal operation, a WDT time-out generates a device RESET (Watchdog Timer Reset). If the device is in SLEEP mode, a WDT time-out causes the device to wake-up and continue with normal operation (Watchdog Timer Wake-up). The $\overline{TO}$ bit in the STATUS register will be cleared upon a Watchdog Timer time-out.

The WDT can be permanently disabled by clearing configuration bit WDTE (Section 12.1).

WDT time-out period values may be found in the Electrical Specifications section under parameter #31. Values for the WDT prescaler may be assigned using the OPTION_REG register.

Note:	The CLRWDT and SLEEP instructions clear the WDT and the postscaler, if assigned to the WDT, and prevent it from timing out and generating a device RESET condition.

.

Note:	When a CLRWDT instruction is executed and the prescaler is assigned to the WDT, the prescaler count will be cleared, but the prescaler assignment is not changed.

FIGURE 12-12: WATCHDOG TIMER BLOCK DIAGRAM

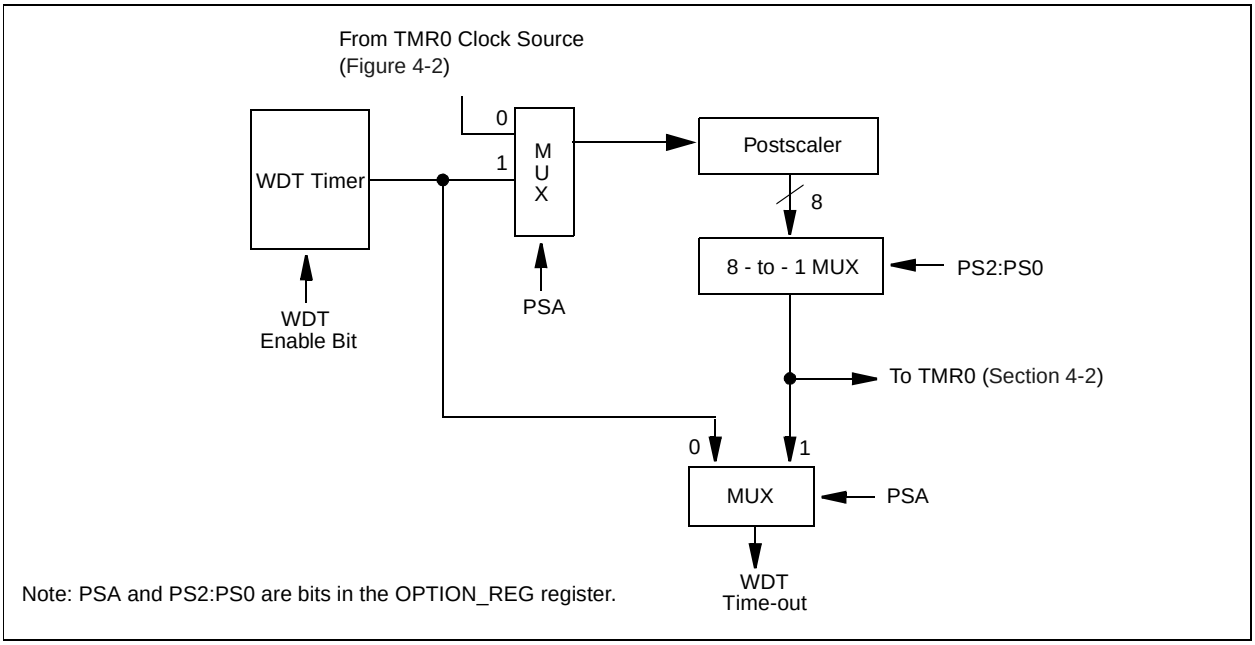

FIGURE 12-13: SUMMARY OF WATCHDOG TIMER REGISTERS

Address	Name	Bit 7	Bit 6	Bit 5	Bit 4	Bit 3	Bit 2	Bit 1	Bit 0
2007h	Config. bits	(1)	BODEN(1)	CP1	CP0	$\overline{PWRTE}$(1)	WDTE	FOSC1	FOSC0
81h,181h	OPTION_REG	$\overline{RBPU}$	INTEDG	T0CS	T0SE	PSA	PS2	PS1	PS0

Legend: Shaded cells are not used by the Watchdog Timer.
Note 1: See Figure 12-1 for the full description of the configuration word bits.

12.13 Power-down Mode (SLEEP)

Power-down mode is entered by executing a SLEEP instruction.

If enabled, the Watchdog Timer will be cleared but keeps running, the $\overline{PD}$ bit (STATUS<3>) is cleared, the $\overline{TO}$ (STATUS<4>) bit is set, and the oscillator driver is turned off. The I/O ports maintain the status they had, before the SLEEP instruction was executed (driving high, low, or hi-impedance).

For lowest current consumption in this mode, place all I/O pins at either V_{DD}, or V_{SS}, ensure no external circuitry is drawing current from the I/O pin, power-down the A/D, disable external clocks. Pull all I/O pins, that are hi-impedance inputs, high or low externally to avoid switching currents caused by floating inputs. The T0CKI input should also be at V_{DD} or V_{SS} for lowest current consumption. The contribution from on-chip pull-ups on PORTB should be considered.

The $\overline{MCLR}$ pin must be at a logic high level (V_{IHMC}).

12.13.1 WAKE-UP FROM SLEEP

The device can wake up from SLEEP through one of the following events:

1. External reset input on $\overline{MCLR}$ pin.
2. Watchdog Timer Wake-up (if WDT was enabled).
3. Interrupt from INT pin, RB port change, or some Peripheral Interrupts.

External $\overline{MCLR}$ Reset will cause a device reset. All other events are considered a continuation of program execution and cause a "wake-up". The $\overline{TO}$ and $\overline{PD}$ bits in the STATUS register can be used to determine the cause of device reset. The $\overline{PD}$ bit, which is set on power-up, is cleared when SLEEP is invoked. The $\overline{TO}$ bit is cleared if a WDT time-out occurred (and caused wake-up).

The following peripheral interrupts can wake the device from SLEEP:

1. PSP read or write.
2. TMR1 interrupt. Timer1 must be operating as an asynchronous counter.
3. CCP capture mode interrupt.
4. Special event trigger (Timer1 in asynchronous mode using an external clock).
5. SSP (Start/Stop) bit detect interrupt.
6. SSP transmit or receive in slave mode (SPI/I^2C).
7. USART RX or TX (synchronous slave mode).
8. A/D conversion (when A/D clock source is RC).
9. Low-voltage detect.

Other peripherals cannot generate interrupts since during SLEEP, no on-chip clocks are present.

When the SLEEP instruction is being executed, the next instruction (PC + 1) is pre-fetched. For the device to wake-up through an interrupt event, the corresponding interrupt enable bit must be set (enabled). Wake-up is regardless of the state of the GIE bit. If the GIE bit is clear (disabled), the device continues execution at the instruction after the SLEEP instruction. If the GIE bit is set (enabled), the device executes the instruction after the SLEEP instruction and then branches to the interrupt address (0004h). In cases where the execution of the instruction following SLEEP is not desirable, the user should have a NOP after the SLEEP instruction.

12.13.2 WAKE-UP USING INTERRUPTS

When global interrupts are disabled (GIE cleared) and any interrupt source has both its interrupt enable bit and interrupt flag bit set, one of the following will occur:

- If the interrupt occurs **before** the execution of a SLEEP instruction, the SLEEP instruction will complete as a NOP. Therefore, the WDT and WDT postscaler will not be cleared, the $\overline{TO}$ bit will not be set and $\overline{PD}$ bits will not be cleared.
- If the interrupt occurs **during or after** the execution of a SLEEP instruction, the device will immediately wake up from sleep. The SLEEP instruction will be completely executed before the wake-up. Therefore, the WDT and WDT postscaler will be cleared, the $\overline{TO}$ bit will be set and the $\overline{PD}$ bit will be cleared.

Even if the flag bits were checked before executing a SLEEP instruction, it may be possible for flag bits to become set before the SLEEP instruction completes. To determine whether a SLEEP instruction executed, test the $\overline{PD}$ bit. If the $\overline{PD}$ bit is set, the SLEEP instruction was executed as a NOP.

To ensure that the WDT is cleared, a CLRWDT instruction should be executed before a SLEEP instruction.

 © 1999 Microchip Technology Inc.

FIGURE 12-14: WAKE-UP FROM SLEEP THROUGH INTERRUPT

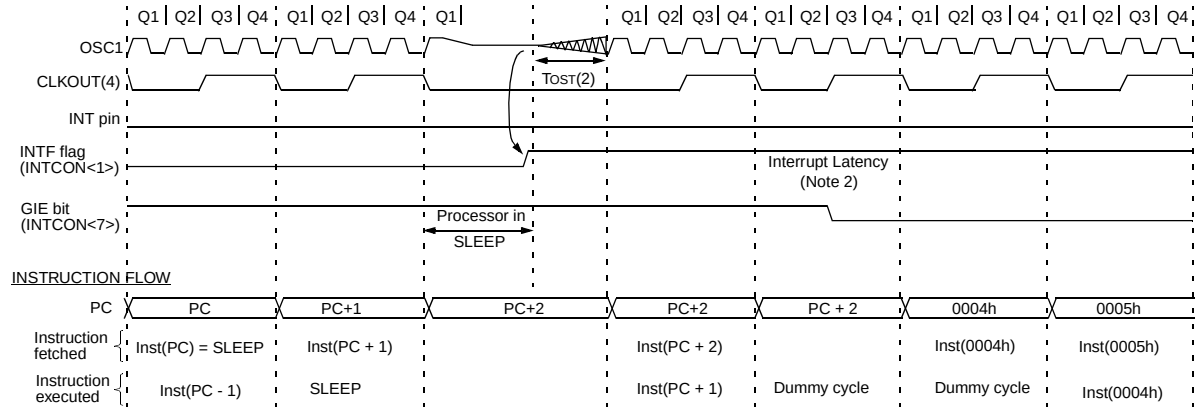

Note 1: XT, HS or LP oscillator mode assumed.
2: TOST = 1024TOSC (drawing not to scale) This delay will not be there for RC osc mode.
3: GIE = '1' assumed. In this case after wake- up, the processor jumps to the interrupt routine. If GIE = '0', execution will continue in-line.
4: CLKOUT is not available in these osc modes, but shown here for timing reference.

12.14 Program Verification/Code Protection

If the code protection bit(s) have not been programmed, the on-chip program memory can be read out for verification purposes.

Note:	Microchip does not recommend code protecting windowed devices.

12.15 ID Locations

Four memory locations (2000h - 2003h) are designated as ID locations where the user can store checksum or other code-identification numbers. These locations are not accessible during normal execution but are readable and writable during program/verify. It is recommended that only the 4 least significant bits of the ID location are used.

For ROM devices, these values are submitted along with the ROM code.

12.16 In-Circuit Serial Programming

PIC16CXXX microcontrollers can be serially programmed while in the end application circuit. This is simply done with two lines for clock and data, and three other lines for power, ground, and the programming voltage. This allows customers to manufacture boards with unprogrammed devices, and then program the microcontroller just before shipping the product. This also allows the most recent firmware or a custom firmware to be programmed.

For complete details of serial programming, please refer to the In-Circuit Serial Programming (ICSP™) Guide, (DS30277).

NOTES:

 © 1999 Microchip Technology Inc.

13.0 INSTRUCTION SET SUMMARY

Each PIC16CXXX instruction is a 14-bit word divided into an OPCODE which specifies the instruction type and one or more operands which further specify the operation of the instruction. The PIC16CXX instruction set summary in Table 13-2 lists **byte-oriented**, **bit-oriented**, and **literal and control** operations. Table 13-1 shows the opcode field descriptions.

For **byte-oriented** instructions, 'f' represents a file register designator and 'd' represents a destination designator. The file register designator specifies which file register is to be used by the instruction.

The destination designator specifies where the result of the operation is to be placed. If 'd' is zero, the result is placed in the W register. If 'd' is one, the result is placed in the file register specified in the instruction.

For **bit-oriented** instructions, 'b' represents a bit field designator which selects the number of the bit affected by the operation, while 'f' represents the number of the file in which the bit is located.

For **literal and control** operations, 'k' represents an eight or eleven bit constant or literal value.

TABLE 13-1 OPCODE FIELD DESCRIPTIONS

Field	Description
f	Register file address (0x00 to 0x7F)
W	Working register (accumulator)
b	Bit address within an 8-bit file register
k	Literal field, constant data or label
x	Don't care location (= 0 or 1) The assembler will generate code with x = 0. It is the recommended form of use for compatibility with all Microchip software tools.
d	Destination select; d = 0: store result in W, d = 1: store result in file register f. Default is d = 1
PC	Program Counter
$\overline{TO}$	Time-out bit
$\overline{PD}$	Power-down bit

The instruction set is highly orthogonal and is grouped into three basic categories:

- **Byte-oriented** operations
- **Bit-oriented** operations
- **Literal and control** operations

All instructions are executed within one single instruction cycle, unless a conditional test is true or the program counter is changed as a result of an instruction. In this case, the execution takes two instruction cycles with the second cycle executed as a NOP. One instruction cycle consists of four oscillator periods. Thus, for an oscillator frequency of 4 MHz, the normal instruction execution time is 1 µs. If a conditional test is true or the program counter is changed as a result of an instruction, the instruction execution time is 2 µs.

Table 13-2 lists the instructions recognized by the MPASM assembler.

Figure 13-1 shows the general formats that the instructions can have.

> **Note:** To maintain upward compatibility with future PIC16CXXX products, do not use the `OPTION` and `TRIS` instructions.

All examples use the following format to represent a hexadecimal number:

0xhh

where h signifies a hexadecimal digit.

FIGURE 13-1: GENERAL FORMAT FOR INSTRUCTIONS

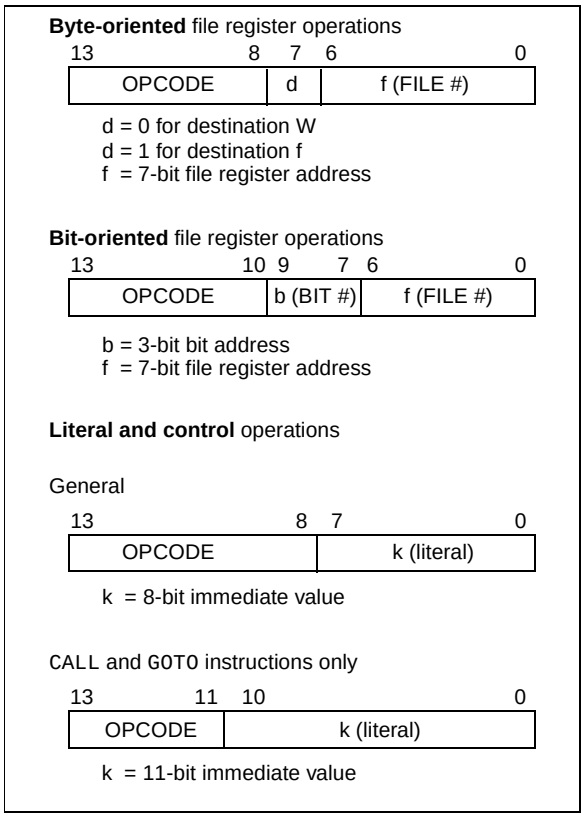

A description of each instruction is available in the PICmicro™ Mid-Range Reference Manual, (DS33023).

TABLE 13-2 PIC16CXXX INSTRUCTION SET

Mnemonic, Operands		Description	Cycles	14-Bit Opcode MSb			LSb	Status Affected	Notes
BYTE-ORIENTED FILE REGISTER OPERATIONS									
ADDWF	**f, d**	Add W and f	1	00	0111	dfff	ffff	C,DC,Z	1,2
ANDWF	**f, d**	AND W with f	1	00	0101	dfff	ffff	Z	1,2
CLRF	**f**	Clear f	1	00	0001	lfff	ffff	Z	2
CLRW	**-**	Clear W	1	00	0001	0xxx	xxxx	Z	
COMF	**f, d**	Complement f	1	00	1001	dfff	ffff	Z	1,2
DECF	**f, d**	Decrement f	1	00	0011	dfff	ffff	Z	1,2
DECFSZ	**f, d**	Decrement f, Skip if 0	1(2)	00	1011	dfff	ffff		1,2,3
INCF	**f, d**	Increment f	1	00	1010	dfff	ffff	Z	1,2
INCFSZ	**f, d**	Increment f, Skip if 0	1(2)	00	1111	dfff	ffff		1,2,3
IORWF	**f, d**	Inclusive OR W with f	1	00	0100	dfff	ffff	Z	1,2
MOVF	**f, d**	Move f	1	00	1000	dfff	ffff	Z	1,2
MOVWF	**f**	Move W to f	1	00	0000	lfff	ffff		
NOP	**-**	No Operation	1	00	0000	0xx0	0000		
RLF	**f, d**	Rotate Left f through Carry	1	00	1101	dfff	ffff	C	1,2
RRF	**f, d**	Rotate Right f through Carry	1	00	1100	dfff	ffff	C	1,2
SUBWF	**f, d**	Subtract W from f	1	00	0010	dfff	ffff	C,DC,Z	1,2
SWAPF	**f, d**	Swap nibbles in f	1	00	1110	dfff	ffff		1,2
XORWF	**f, d**	Exclusive OR W with f	1	00	0110	dfff	ffff	Z	1,2
BIT-ORIENTED FILE REGISTER OPERATIONS									
BCF	**f, b**	Bit Clear f	1	01	00bb	bfff	ffff		1,2
BSF	**f, b**	Bit Set f	1	01	01bb	bfff	ffff		1,2
BTFSC	**f, b**	Bit Test f, Skip if Clear	1 (2)	01	10bb	bfff	ffff		3
BTFSS	**f, b**	Bit Test f, Skip if Set	1 (2)	01	11bb	bfff	ffff		3
LITERAL AND CONTROL OPERATIONS									
ADDLW	**k**	Add literal and W	1	11	111x	kkkk	kkkk	C,DC,Z	
ANDLW	**k**	AND literal with W	1	11	1001	kkkk	kkkk	Z	
CALL	**k**	Call subroutine	2	10	0kkk	kkkk	kkkk		
CLRWDT	**-**	Clear Watchdog Timer	1	00	0000	0110	0100	$\overline{TO}$,$\overline{PD}$	
GOTO	**k**	Go to address	2	10	1kkk	kkkk	kkkk		
IORLW	**k**	Inclusive OR literal with W	1	11	1000	kkkk	kkkk	Z	
MOVLW	**k**	Move literal to W	1	11	00xx	kkkk	kkkk		
RETFIE	**-**	Return from interrupt	2	00	0000	0000	1001		
RETLW	**k**	Return with literal in W	2	11	01xx	kkkk	kkkk		
RETURN	**-**	Return from Subroutine	2	00	0000	0000	1000		
SLEEP	**-**	Go into standby mode	1	00	0000	0110	0011	$\overline{TO}$,$\overline{PD}$	
SUBLW	**k**	Subtract W from literal	1	11	110x	kkkk	kkkk	C,DC,Z	
XORLW	**k**	Exclusive OR literal with W	1	11	1010	kkkk	kkkk	Z	

Note 1: When an I/O register is modified as a function of itself (e.g., `MOVF PORTB, 1`), the value used will be that value present on the pins themselves. For example, if the data latch is '1' for a pin configured as input and is driven low by an external device, the data will be written back with a '0'.

2: If this instruction is executed on the TMR0 register (and, where applicable, d = 1), the prescaler will be cleared if assigned to the Timer0 Module.

3: If Program Counter (PC) is modified or a conditional test is true, the instruction requires two cycles. The second cycle is executed as a NOP.

 © 1999 Microchip Technology Inc.

14.0 DEVELOPMENT SUPPORT

14.1 Development Tools

The PICmicro® microcontrollers are supported with a full range of hardware and software development tools:

- MPLAB™ -ICE Real-Time In-Circuit Emulator
- ICEPIC™ Low-Cost PIC16C5X and PIC16CXXX In-Circuit Emulator
- PRO MATE® II Universal Programmer
- PICSTART® Plus Entry-Level Prototype Programmer
- SIMICE
- PICDEM-1 Low-Cost Demonstration Board
- PICDEM-2 Low-Cost Demonstration Board
- PICDEM-3 Low-Cost Demonstration Board
- MPASM Assembler
- MPLAB™ SIM Software Simulator
- MPLAB-C17 (C Compiler)
- Fuzzy Logic Development System (*fuzzy*TECH®–MP)
- KEELOQ® Evaluation Kits and Programmer

14.2 MPLAB-ICE: High Performance Universal In-Circuit Emulator with MPLAB IDE

The MPLAB-ICE Universal In-Circuit Emulator is intended to provide the product development engineer with a complete microcontroller design tool set for PICmicro microcontrollers (MCUs). MPLAB-ICE is supplied with the MPLAB Integrated Development Environment (IDE), which allows editing, “make” and download, and source debugging from a single environment.

Interchangeable processor modules allow the system to be easily reconfigured for emulation of different processors. The universal architecture of the MPLAB-ICE allows expansion to support all new Microchip microcontrollers.

The MPLAB-ICE Emulator System has been designed as a real-time emulation system with advanced features that are generally found on more expensive development tools. The PC compatible 386 (and higher) machine platform and Microsoft Windows® 3.x or Windows 95 environment were chosen to best make these features available to you, the end user.

MPLAB-ICE is available in two versions. MPLAB-ICE 1000 is a basic, low-cost emulator system with simple trace capabilities. It shares processor modules with the MPLAB-ICE 2000. This is a full-featured emulator system with enhanced trace, trigger, and data monitoring features. Both systems will operate across the entire operating speed reange of the PICmicro MCU.

14.3 ICEPIC: Low-Cost PICmicro In-Circuit Emulator

ICEPIC is a low-cost in-circuit emulator solution for the Microchip PIC12CXXX, PIC16C5X and PIC16CXXX families of 8-bit OTP microcontrollers.

ICEPIC is designed to operate on PC-compatible machines ranging from 386 through Pentium™ based machines under Windows 3.x, Windows 95, or Windows NT environment. ICEPIC features real time, non-intrusive emulation.

14.4 PRO MATE II: Universal Programmer

The PRO MATE II Universal Programmer is a full-featured programmer capable of operating in stand-alone mode as well as PC-hosted mode. PRO MATE II is CE compliant.

The PRO MATE II has programmable V_{DD} and V_{PP} supplies which allows it to verify programmed memory at V_{DD} min and V_{DD} max for maximum reliability. It has an LCD display for displaying error messages, keys to enter commands and a modular detachable socket assembly to support various package types. In stand-alone mode the PRO MATE II can read, verify or program PIC12CXXX, PIC14C000, PIC16C5X, PIC16CXXX and PIC17CXX devices. It can also set configuration and code-protect bits in this mode.

14.5 PICSTART Plus Entry Level Development System

The PICSTART programmer is an easy-to-use, low-cost prototype programmer. It connects to the PC via one of the COM (RS-232) ports. MPLAB Integrated Development Environment software makes using the programmer simple and efficient. PICSTART Plus is not recommended for production programming.

PICSTART Plus supports all PIC12CXXX, PIC14C000, PIC16C5X, PIC16CXXX and PIC17CXX devices with up to 40 pins. Larger pin count devices such as the PIC16C923, PIC16C924 and PIC17C756 may be supported with an adapter socket. PICSTART Plus is CE compliant.

© 1999 Microchip Technology Inc.

14.6 SIMICE Entry-Level Hardware Simulator

SIMICE is an entry-level hardware development system designed to operate in a PC-based environment with Microchip's simulator MPLAB™-SIM. Both SIMICE and MPLAB-SIM run under Microchip Technology's MPLAB Integrated Development Environment (IDE) software. Specifically, SIMICE provides hardware simulation for Microchip's PIC12C5XX, PIC12CE5XX, and PIC16C5X families of PICmicro 8-bit microcontrollers. SIMICE works in conjunction with MPLAB-SIM to provide non-real-time I/O port emulation. SIMICE enables a developer to run simulator code for driving the target system. In addition, the target system can provide input to the simulator code. This capability allows for simple and interactive debugging without having to manually generate MPLAB-SIM stimulus files. SIMICE is a valuable debugging tool for entry-level system development.

14.7 PICDEM-1 Low-Cost PICmicro Demonstration Board

The PICDEM-1 is a simple board which demonstrates the capabilities of several of Microchip's microcontrollers. The microcontrollers supported are: PIC16C5X (PIC16C54 to PIC16C58A), PIC16C61, PIC16C62X, PIC16C71, PIC16C8X, PIC17C42, PIC17C43 and PIC17C44. All necessary hardware and software is included to run basic demo programs. The users can program the sample microcontrollers provided with the PICDEM-1 board, on a PRO MATE II or PICSTART-Plus programmer, and easily test firmware. The user can also connect the PICDEM-1 board to the MPLAB-ICE emulator and download the firmware to the emulator for testing. Additional prototype area is available for the user to build some additional hardware and connect it to the microcontroller socket(s). Some of the features include an RS-232 interface, a potentiometer for simulated analog input, push-button switches and eight LEDs connected to PORTB.

14.8 PICDEM-2 Low-Cost PIC16CXX Demonstration Board

The PICDEM-2 is a simple demonstration board that supports the PIC16C62, PIC16C64, PIC16C65, PIC16C73 and PIC16C74 microcontrollers. All the necessary hardware and software is included to run the basic demonstration programs. The user can program the sample microcontrollers provided with the PICDEM-2 board, on a PRO MATE II programmer or PICSTART-Plus, and easily test firmware. The MPLAB-ICE emulator may also be used with the PICDEM-2 board to test firmware. Additional prototype area has been provided to the user for adding additional hardware and connecting it to the microcontroller socket(s). Some of the features include a RS-232 interface, push-button switches, a potentiometer for simulated analog input, a Serial EEPROM to demonstrate usage of the I^2C bus and separate headers for connection to an LCD module and a keypad.

14.9 PICDEM-3 Low-Cost PIC16CXXX Demonstration Board

The PICDEM-3 is a simple demonstration board that supports the PIC16C923 and PIC16C924 in the PLCC package. It will also support future 44-pin PLCC microcontrollers with a LCD Module. All the necessary hardware and software is included to run the basic demonstration programs. The user can program the sample microcontrollers provided with the PICDEM-3 board, on a PRO MATE II programmer or PICSTART Plus with an adapter socket, and easily test firmware. The MPLAB-ICE emulator may also be used with the PICDEM-3 board to test firmware. Additional prototype area has been provided to the user for adding hardware and connecting it to the microcontroller socket(s). Some of the features include an RS-232 interface, push-button switches, a potentiometer for simulated analog input, a thermistor and separate headers for connection to an external LCD module and a keypad. Also provided on the PICDEM-3 board is an LCD panel, with 4 commons and 12 segments, that is capable of displaying time, temperature and day of the week. The PICDEM-3 provides an additional RS-232 interface and Windows 3.1 software for showing the demultiplexed LCD signals on a PC. A simple serial interface allows the user to construct a hardware demultiplexer for the LCD signals.

© 1999 Microchip Technology Inc.

14.10 MPLAB Integrated Development Environment Software

The MPLAB IDE Software brings an ease of software development previously unseen in the 8-bit microcontroller market. MPLAB is a windows based application which contains:

- A full featured editor
- Three operating modes
  - editor
  - emulator
  - simulator
- A project manager
- Customizable tool bar and key mapping
- A status bar with project information
- Extensive on-line help

MPLAB allows you to:

- Edit your source files (either assembly or ‘C’)
- One touch assemble (or compile) and download to PICmicro tools (automatically updates all project information)
- Debug using:
  - source files
  - absolute listing file

The ability to use MPLAB with Microchip’s simulator allows a consistent platform and the ability to easily switch from the low cost simulator to the full featured emulator with minimal retraining due to development tools.

14.11 Assembler (MPASM)

The MPASM Universal Macro Assembler is a PC-hosted symbolic assembler. It supports all microcontroller series including the PIC12C5XX, PIC14000, PIC16C5X, PIC16CXXX, and PIC17CXX families.

MPASM offers full featured Macro capabilities, conditional assembly, and several source and listing formats. It generates various object code formats to support Microchip's development tools as well as third party programmers.

MPASM allows full symbolic debugging from MPLAB-ICE, Microchip’s Universal Emulator System.

MPASM has the following features to assist in developing software for specific use applications.

- Provides translation of Assembler source code to object code for all Microchip microcontrollers.
- Macro assembly capability.
- Produces all the files (Object, Listing, Symbol, and special) required for symbolic debug with Microchip’s emulator systems.
- Supports Hex (default), Decimal and Octal source and listing formats.

MPASM provides a rich directive language to support programming of the PICmicro. Directives are helpful in making the development of your assemble source code shorter and more maintainable.

14.12 Software Simulator (MPLAB-SIM)

The MPLAB-SIM Software Simulator allows code development in a PC host environment. It allows the user to simulate the PICmicro series microcontrollers on an instruction level. On any given instruction, the user may examine or modify any of the data areas or provide external stimulus to any of the pins. The input/output radix can be set by the user and the execution can be performed in; single step, execute until break, or in a trace mode.

MPLAB-SIM fully supports symbolic debugging using MPLAB-C17 and MPASM. The Software Simulator offers the low cost flexibility to develop and debug code outside of the laboratory environment making it an excellent multi-project software development tool.

14.13 MPLAB-C17 Compiler

The MPLAB-C17 Code Development System is a complete ANSI ‘C’ compiler and integrated development environment for Microchip’s PIC17CXXX family of microcontrollers. The compiler provides powerful integration capabilities and ease of use not found with other compilers.

For easier source level debugging, the compiler provides symbol information that is compatible with the MPLAB IDE memory display.

14.14 Fuzzy Logic Development System (*fuzzy*TECH-MP)

*fuzzy*TECH-MP fuzzy logic development tool is available in two versions - a low cost introductory version, MP Explorer, for designers to gain a comprehensive working knowledge of fuzzy logic system design; and a full-featured version, *fuzzy*TECH-MP, Edition for implementing more complex systems.

Both versions include Microchip’s *fuzzy*LAB™ demonstration board for hands-on experience with fuzzy logic systems implementation.

14.15 SEEVAL® Evaluation and Programming System

The SEEVAL SEEPROM Designer’s Kit supports all Microchip 2-wire and 3-wire Serial EEPROMs. The kit includes everything necessary to read, write, erase or program special features of any Microchip SEEPROM product including Smart Serials™ and secure serials. The Total Endurance™ Disk is included to aid in trade-off analysis and reliability calculations. The total kit can significantly reduce time-to-market and result in an optimized system.

14.16 KEELOQ® Evaluation and Programming Tools

KEELOQ evaluation and programming tools support Microchips HCS Secure Data Products. The HCS evaluation kit includes an LCD display to show changing codes, a decoder to decode transmissions, and a programming interface to program test transmitters.

© 1999 Microchip Technology Inc.

TABLE 14-1 DEVELOPMENT TOOLS FROM MICROCHIP

		PIC12C5XX	PIC14000	PIC16C5X	PIC16CXXX	PIC16C6X	PIC16C7XX	PIC16C8X	PIC16C9XX	PIC17C4X	PIC17C7XX	24CXX 25CXX 93CXX	HCS200 HCS300 HCS301
Emulator Products	MPLAB™-ICE	✓	✓	✓	✓	✓	✓	✓	✓	✓	✓		
	ICEPIC™ Low-Cost In-Circuit Emulator			✓	✓	✓	✓	✓	✓				
Software Tools	MPLAB™ Integrated Development Environment	✓	✓	✓	✓	✓	✓	✓	✓	✓	✓		
	MPLAB™ C17* Compiler									✓	✓		
	*fuzzy*TECH®-MP Explorer/Edition Fuzzy Logic Dev. Tool	✓	✓	✓	✓	✓	✓	✓	✓	✓			
	Total Endurance™ Software Model											✓	
Programmers	PICSTART®Plus Low-Cost Universal Dev. Kit	✓	✓	✓	✓	✓	✓	✓	✓	✓	✓		
	PRO MATE® II Universal Programmer	✓	✓	✓	✓	✓	✓	✓	✓	✓	✓	✓	✓
	KEELOQ® Programmer												✓
Demo Boards	SEEVAL® Designers Kit											✓	
	SIMICE	✓		✓									
	PICDEM-14A		✓										
	PICDEM-1			✓	✓			✓		✓			
	PICDEM-2					✓	✓						
	PICDEM-3								✓				
	KEELOQ® Evaluation Kit												✓
	KEELOQ Transponder Kit												✓

© 1999 Microchip Technology Inc.

NOTES:

© 1999 Microchip Technology Inc.

15.0 ELECTRICAL CHARACTERISTICS

Absolute Maximum Ratings †

Ambient temperature under bias ..... -55 to +125°C
Storage temperature ..... -65°C to +150°C
Voltage on any pin with respect to V_{SS} (except V_{DD}, $\overline{MCLR}$. and RA4) ..... -0.3V to (V_{DD} + 0.3V)
Voltage on V_{DD} with respect to V_{SS} ..... -0.3 to +7.5V
Voltage on $\overline{MCLR}$ with respect to V_{SS} (Note 2) ..... 0 to +8.5V
Voltage on RA4 with respect to Vss ..... 0 to +8.5V
Total power dissipation (Note 1) 1.0W
Maximum current out of V_{SS} pin ..... 300 mA
Maximum current into V_{DD} pin ..... 250 mA
Input clamp current, I_{IK} (V_I < 0 or V_I > V_{DD}) ..... ± 20 mA
Output clamp current, I_{OK} (V_O < 0 or V_O > V_{DD}) ..... ± 20 mA
Maximum output current sunk by any I/O pin ..... 25 mA
Maximum output current sourced by any I/O pin ..... 25 mA
Maximum current sunk by PORTA, PORTB, and PORTE (combined) (Note 3) ..... 200 mA
Maximum current sourced by PORTA, PORTB, and PORTE (combined) (Note 3) ..... 200 mA
Maximum current sunk by PORTC and PORTD (combined) (Note 3) ..... 200 mA
Maximum current sourced by PORTC and PORTD (combined) (Note 3) ..... 200 mA

Note 1: Power dissipation is calculated as follows: Pdis = V_{DD} x {I_{DD} - ∑ I_{OH}} + ∑ {(V_{DD} - V_{OH}) x I_{OH}} + ∑(V_{OL} x I_{OL})

Note 2: Voltage spikes below V_{SS} at the $\overline{MCLR}$ pin, inducing currents greater than 80 mA, may cause latch-up. Thus, a series resistor of 50-100Ω should be used when applying a “low” level to the $\overline{MCLR}$ pin rather than pulling this pin directly to V_{SS}.

Note 3: PORTD and PORTE are not implemented on the PIC16C773.

† NOTICE: Stresses above those listed under “Absolute Maximum Ratings” may cause permanent damage to the device. This is a stress rating only and functional operation of the device at those or any other conditions above those indicated in the operation listings of this specification is not implied. Exposure to maximum rating conditions for extended periods may affect device reliability.

TABLE 15-1 CROSS REFERENCE OF DEVICE SPECS FOR OSCILLATOR CONFIGURATIONS AND FREQUENCIES OF OPERATION (COMMERCIAL DEVICES)

OSC	PIC16C773-04 PIC16C774-04	PIC16C773-20 PIC16C774-20	PIC16LC773-04 PIC16LC774-04	JW Devices
RC	V_{DD}: 4.0V to 5.5V I_{DD}: 5 mA max. at 5.5V I_{PD}: 16 µA max. at 4V Freq: 4 MHz max.	V_{DD}: 4.5V to 5.5V I_{DD}: 2.7 mA typ. at 5.5V I_{PD}: 1.5 µA typ. at 4V Freq: 4 MHz max.	V_{DD}: 2.5V to 5.5V I_{DD}: 3.8 mA max. at 3.0V I_{PD}: 5 µA max. at 3V Freq: 4 MHz max.	V_{DD}: 4.0V to 5.5V I_{DD}: 5 mA max. at 5.5V I_{PD}: 16 µA max. at 4V Freq: 4 MHz max.
XT	V_{DD}: 4.0V to 5.5V I_{DD}: 5 mA max. at 5.5V I_{PD}: 16 µA max. at 4V Freq: 4 MHz max.	V_{DD}: 4.5V to 5.5V I_{DD}: 2.7 mA typ. at 5.5V I_{PD}: 1.5 µA typ. at 4V Freq: 4 MHz max.	V_{DD}: 2.5V to 5.5V I_{DD}: 3.8 mA max. at 3.0V I_{PD}: 5 µA max. at 3V Freq: 4 MHz max.	V_{DD}: 4.0V to 5.5V I_{DD}: 5 mA max. at 5.5V I_{PD}: 16 µA max. at 4V Freq: 4 MHz max.
HS	V_{DD}: 4.5V to 5.5V I_{DD}: 13.5 mA typ. at 5.5V I_{PD}: 1.5 µA typ. at 4.5V Freq: 4 MHz max.	V_{DD}: 4.5V to 5.5V I_{DD}: 20 mA max. at 5.5V I_{PD}: 1.5 µA typ. at 4.5V Freq: 20 MHz max.	Not tested for functionality	V_{DD}: 4.5V to 5.5V I_{DD}: 20 mA max. at 5.5V I_{PD}: 1.5 µA typ. at 4.5V Freq: 20 MHz max.
LP	V_{DD}: 4.0V to 5.5V I_{DD}: 52.5 µA typ. at 32 kHz, 4.0V I_{PD}: 0.9 µA typ. at 4.0V Freq: 200 kHz max.	Not tested for functionality	V_{DD}: 2.5V to 5.5V I_{DD}: 48 µA max. at 32 kHz, 3.0V I_{PD}: 5.0 µA max. at 3.0V Freq: 200 kHz max.	V_{DD}: 2.5V to 5.5V I_{DD}: 48 µA max. at 32 kHz, 3.0V I_{PD}: 5.0 µA max. at 3.0V Freq: 200 kHz max.

The shaded sections indicate oscillator selections which are tested for functionality, but not for MIN/MAX specifications.
It is recommended that the user select the device type that ensures the specifications required.

ADVANCE

15.1 DC Characteristics: PIC16C77X (Commercial, Industrial)

DC CHARACTERISTICS			Standard Operating Conditions (unless otherwise stated) Operating temperature -40°C ≤ TA ≤ +85°C for industrial and 0°C ≤ TA ≤ +70°C for commercial				
Param No.	**Characteristic**	**Sym**	**Min**	**Typ†**	**Max**	**Units**	**Conditions**
D001 D001A	Supply Voltage	VDD	4.0 4.5	— —	5.5 5.5	V V	XT, RC and LP osc configuration HS osc configuration
D002*	RAM Data Retention Voltage (Note 1)	VDR	—	1.5	—	V	
D003	VDD start voltage to ensure internal Power-on Reset signal	VPOR	—	VSS	—	V	See section on Power-on Reset for details
D004*	VDD rise rate to ensure internal Power-on Reset signal	SVDD	0.05	—	—	V/ms	See section on Power-on Reset for details. PWRT enabled
D010 D013	Supply Current (Note 2)	IDD	— —	2.7 13.5	5 30	mA mA	XT, RC osc configuration FOSC = 4 MHz, VDD = 5.5V (Note 4) HS osc configuration FOSC = 20 MHz, VDD = 5.5V
D020 D020A	Power-down Current (Note 3)	IPD	— —	1.5 1.5	16 19	µA µA	VDD = 4.0V, -0°C to +70°C VDD = 4.0V, -40°C to +85°C
	Module Differential Current (Note 5)						
D021	Watchdog Timer	ΔIWDT	—	6.0	20	µA	VDD = 4.0V
D023*	Brown-out Reset Current (Note 5)	ΔIBOR	TBD	200	—	µA	BOR enabled, VDD = 5.0V
D023B*	Bandgap voltage generator	ΔIBG[6]	—	40µA	TBD	µA	
D025*	Timer1 oscillator	ΔIT1OSC	—	5	9	µA	VDD = 4.0V
D026*	A/D Converter	ΔIAD	—	300	—	µA	VDD = 5.5V, A/D on, not converting

* These parameters are characterized but not tested.

† Data in "Typ" column is at 5V, 25°C unless otherwise stated. These parameters are for design guidance only and are not tested.

Note 1: This is the limit to which VDD can be lowered without losing RAM data.

2: The supply current is mainly a function of the operating voltage and frequency. Other factors such as I/O pin loading and switching rate, oscillator type, internal code execution pattern, and temperature also have an impact on the current consumption.
The test conditions for all IDD measurements in active operation mode are:
OSC1 = external square wave, from rail to rail; all I/O pins tristated, pulled to VDD
MCLR = VDD; WDT enabled/disabled as specified.

3: The power-down current in SLEEP mode does not depend on the oscillator type. Power-down current is measured with the part in SLEEP mode, with all I/O pins in hi-impedance state and tied to VDD or VSS.

4: For RC osc configuration, current through Rext is not included. The current through the resistor can be estimated by the formula Ir = VDD/2Rext (mA) with Rext in kOhm.

5: The Δ current is the additional current consumed when the peripheral is enabled. This current should be added to the base (IPD or IDD) current.

6: The bandgap voltate reference provides 1.22V to the VRL, VRH, LVD and BOR circuits. When calculating current consumption use the following formula: ΔIVRL + ΔIVRH + ΔILVD + ΔIBOR + ΔIBG. Any of the ΔIVRL, ΔIVRH, ΔILVD or ΔIBOR can be 0.

ADVANCE

 © 1999 Microchip Technology Inc.

15.2 DC Characteristics:PIC16LC77X-04 (Commercial, Industrial)

DC CHARACTERISTICS			Standard Operating Conditions (unless otherwise stated) Operating temperature -40°C ≤ TA ≤ +85°C for industrial and 0°C ≤ TA ≤ +70°C for commercial				
Param No.	**Characteristic**	**Sym**	**Min**	**Typ†**	**Max**	**Units**	**Conditions**
D001	Supply Voltage	VDD	2.5	—	5.5	V	LP, XT, RC osc configuration (DC - 4 MHz)
D002*	RAM Data Retention Voltage (Note 1)	VDR	—	1.5	—	V	
D003	VDD start voltage to ensure internal Power-on Reset signal	VPOR	—	VSS	—	V	See section on Power-on Reset for details
D004*	VDD rise rate to ensure internal Power-on Reset signal	SVDD	0.05	—	—	V/ms	See section on Power-on Reset for details. PWRT enabled
D010	Supply Current (Note 2)	IDD	—	2.0	3.8	mA	XT, RC osc configuration FOSC = 4 MHz, VDD = 3.0V (Note 4)
D010A			—	22.5	48	µA	LP osc configuration FOSC = 32 kHz, VDD = 3.0V, WDT disabled
D020	Power-down Current (Note 3)	IPD	—	0.9	5	µA	VDD = 3.0V, 0°C to +70°C
D020A			—	0.9	5	µA	VDD = 3.0V, -40°C to +85°C
	Module Differential Current (note5)						
D021	Watchdog Timer	ΔIWDT	—	6	20	µA	VDD = 3.0V
D023*	Brown-out Reset Current (Note 5)	ΔIBOR	TBD	200	—	µA	BOR enabled, VDD = 5.0V
D025*	Timer1 oscillator	ΔIT1OSC	—	1.5	3	µA	VDD = 3.0V
D026*	A/D Converter	ΔIAD	—	300	—	µA	VDD = 5.5V, A/D on, not converting

* These parameters are characterized but not tested.

† Data in "Typ" column is at 5V, 25°C unless otherwise stated. These parameters are for design guidance only and are not tested.

Note 1: This is the limit to which VDD can be lowered without losing RAM data.

2: The supply current is mainly a function of the operating voltage and frequency. Other factors such as I/O pin loading and switching rate, oscillator type, internal code execution pattern, and temperature also have an impact on the current consumption.
The test conditions for all IDD measurements in active operation mode are:
OSC1 = external square wave, from rail to rail; all I/O pins tristated, pulled to VDD
$\overline{\text{MCLR}}$ = VDD; WDT enabled/disabled as specified.

3: The power-down current in SLEEP mode does not depend on the oscillator type. Power-down current is measured with the part in SLEEP mode, with all I/O pins in hi-impedance state and tied to VDD or VSS.

4: For RC osc configuration, current through Rext is not included. The current through the resistor can be estimated by the formula Ir = VDD/2Rext (mA) with Rext in kOhm.

5: The Δ current is the additional current consumed when the peripheral is enabled. This current should be added to the base (IPD or IDD) current.

ADVANCE

15.3 DC Characteristics: PIC16C77X (Commercial, Industrial)

DC CHARACTERISTICS							
		Standard Operating Conditions (unless otherwise stated) Operating temperature -40°C ≤ TA ≤ +85°C for industrial and 0°C ≤ TA ≤ +70°C for commercial Operating voltage VDD range as described in DC spec Section 15.1 and Section 15.2.					
Param No.	**Characteristic**	**Sym**	**Min**	**Typ†**	**Max**	**Units**	**Conditions**
	Input Low Voltage						
	I/O ports	VIL					
D030	with TTL buffer		VSS	—	0.15VDD	V	For entire VDD range
D030A			VSS	—	0.8V	V	4.5V ≤ VDD ≤ 5.5V
D031	with Schmitt Trigger buffer						
	RC3 and RC4		VSS	—	0.3VDD	V	I²C compliant
	All others		VSS	—	0.2VDD		For entire VDD range
D032	$\overline{\text{MCLR}}$, OSC1 (in RC mode)		VSS	—	0.2VDD	V	
D033	OSC1 (in XT, HS and LP)		VSS	—	0.3VDD	V	Note1
	Input High Voltage						
	I/O ports	VIH		—			
	with TTL buffer						
D040			2.0	—	VDD	V	4.5V ≤ VDD ≤ 5.5V
D040A			0.25VDD + 0.8V	—	VDD	V	For entire VDD range
	with Schmitt Trigger buffer						
D041	RC3 and RC4		0.7VDD	—	VDD	V	I²C compliant
	All others		0.8VDD	—	VDD	V	For entire VDD range
D042	$\overline{\text{MCLR}}$		0.8VDD	—	VDD	V	
D042A	OSC1 (XT, HS and LP)		0.7VDD	—	VDD	V	Note1
D043	OSC1 (in RC mode)		0.9VDD	—	VDD	V	
D070	PORTB weak pull-up current	IPURB	50	250	400	μA	VDD = 5V, VPIN = VSS
	Input Leakage Current (Notes 2, 3)						
D060	I/O ports (digital)	IIL	—	—	±1	μA	Vss ≤ VPIN ≤ VDD, Pin at hi-impedance
D060A	I/O ports (RA0-RA3, RA5, RB2, RB3 analog)	IIL	—	—	±100	nA	Vss ≤ VPIN ≤ VDD, Pin at hi-impedance
D061	$\overline{\text{MCLR}}$, RA4/T0CKI		—	—	±5	μA	Vss ≤ VPIN ≤ VDD
D063	OSC1		—	—	±5	μA	Vss ≤ VPIN ≤ VDD, XT, HS and LP osc configuration
	Output Low Voltage						
D080	I/O ports	VOL	—	—	0.6	V	IOL = 8.5 mA, VDD = 4.5V, -40°C to +85°C
D083	OSC2/CLKOUT (RC osc config)		—	—	0.6	V	IOL = 1.6 mA, VDD = 4.5V, -40°C to +85°C

* These parameters are characterized but not tested.

† Data in "Typ" column is at 5V, 25°C unless otherwise stated. These parameters are for design guidance only and are not tested.

Note 1: In RC oscillator configuration, the OSC1/CLKIN pin is a Schmitt Trigger input. It is not recommended that the PIC16C77X be driven with external clock in RC mode.

2: The leakage current on the $\overline{\text{MCLR}}$ pin is strongly dependent on the applied voltage level. The specified levels represent normal operating conditions. Higher leakage current may be measured at different input voltages.

3: Negative current is defined as current sourced by the pin.

ADVANCE

 © 1999 Microchip Technology Inc.

DC CHARACTERISTICS							**Standard Operating Conditions (unless otherwise stated)** Operating temperature -40°C ≤ TA ≤ +85°C for industrial and 0°C ≤ TA ≤ +70°C for commercial Operating voltage VDD range as described in DC spec Section 15.1 and Section 15.2.
Param No.	**Characteristic**	**Sym**	**Min**	**Typ†**	**Max**	**Units**	**Conditions**
	Output High Voltage						
D090	I/O ports (Note 3)	VOH	VDD - 0.7	—	—	V	IOH = -3.0 mA, VDD = 4.5V, -40°C to +85°C
D092	OSC2/CLKOUT (RC osc config)		VDD - 0.7	—	—	V	IOH = -1.3 mA, VDD = 4.5V, -40°C to +85°C
D150*	**Open-Drain High Voltage**	VOD	—	—	8.5	V	RA4 pin
	Capacitive Loading Specs on Output Pins						
D100	OSC2 pin	COSC2	—	—	15	pF	In XT, HS and LP modes when external clock is used to drive OSC1.
D101	All I/O pins and OSC2 (in RC mode)	CIO	—	—	50	pF	
D102	SCL, SDA in I^2C mode	CB	—	—	400	pF	

* These parameters are characterized but not tested.

† Data in "Typ" column is at 5V, 25°C unless otherwise stated. These parameters are for design guidance only and are not tested.

Note 1: In RC oscillator configuration, the OSC1/CLKIN pin is a Schmitt Trigger input. It is not recommended that the PIC16C77X be driven with external clock in RC mode.

2: The leakage current on the $\overline{MCLR}$ pin is strongly dependent on the applied voltage level. The specified levels represent normal operating conditions. Higher leakage current may be measured at different input voltages.

3: Negative current is defined as current sourced by the pin.

ADVANCE

15.4 DC Characteristics: VREF

TABLE 15-2 ELECTRICAL CHARACTERISTICS: VREF

DC CHARACTERISTICS							
		Standard Operating Conditions (unless otherwise stated) Operating temperature -40°C ≤ TA ≤ +85°C for industrial and 0°C ≤ TA ≤ +70°C for commercial Operating voltage VDD range as described in DC spec Section 15.1 and Section 15.2.					
Param No.	**Characteristic**	**Symbol**	**Min**	**Typ†**	**Max**	**Units**	**Conditions**
D400	Output Voltage	VRL	2.0	2.048	2.1	V	VDD ≥ 2.5V
		VRH	4.0	4.096	4.2	V	VDD ≥ 4.5V
D401A	VRL Quiescent Supply Current	ΔIVRL	—	70	TBD	µA	No load on VRL.
D401B	VRH Quiescent Supply Current	ΔIVRH	—	70	TBD	µA	No load on VRH.
D402	Ouput Voltage Drift	TCVOUT	—	15*	50*	ppm/°C	Note 1
D404	External Load Source	IVREFSO	—	—	5*	mA	
D405	External Load Sink	IVREFSI	—	—	-5*	mA	
D406	Load Regulation	ΔVOUT/ΔIOUT	—	1	TBD*	mV/mA	Isource = 0 mA to 5 mA
			—	1	TBD*		Isink = 0 mA to 5 mA
D407	Line Regulation	ΔVOUT/ΔVDD	—	—	50*	µV/V	

* These parameters are characterized but not tested.

† Data in "Typ" column is at 5V, 25°C unless otherwise stated. These parameters are for design guidance only and are not tested.

Note 1: Production tested at TAMB = 25°C. Specifications over temp limits guaranteed by characterization.

ADVANCE INFO

 © 1999 Microchip Technology Inc.

FIGURE 15-1: LOW-VOLTAGE DETECT CHARACTERISTICS

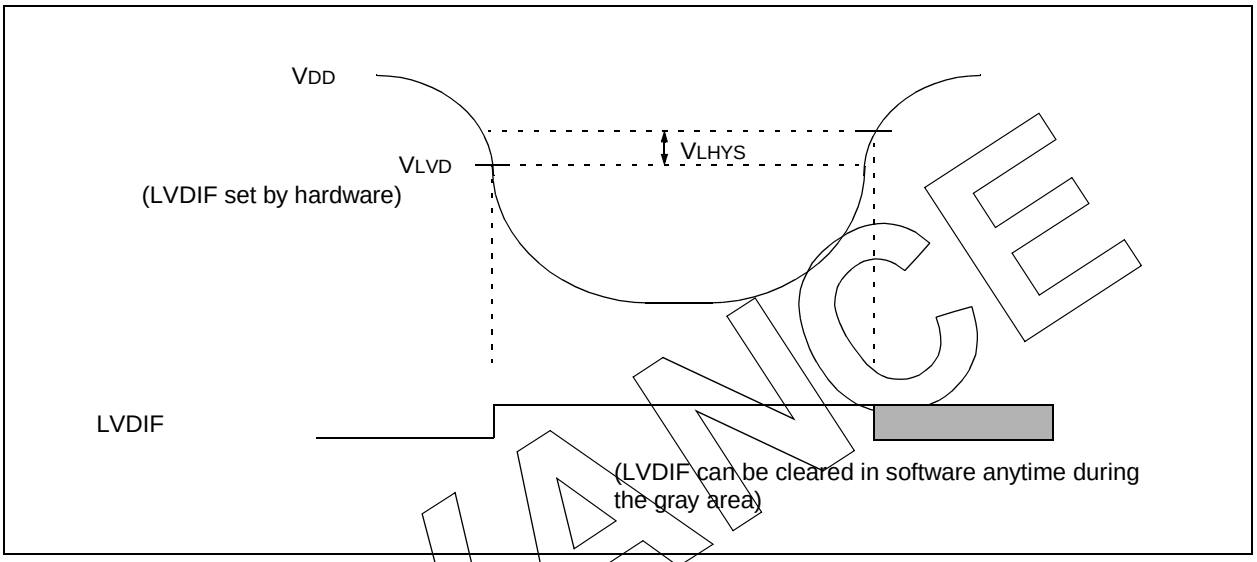

TABLE 15-3 ELECTRICAL CHARACTERISTICS: LVD

DC CHARACTERISTICS	Standard Operating Conditions (unless otherwise stated) Operating temperature -40°C ≤ TA ≤ +85°C for industrial and 0°C ≤ TA ≤ +70°C for commercial Operating voltage VDD range as described in DC spec Section 15.1 and Section 15.2.							
Param No.	**Characteristic**		**Symbol**	**Min**	**Typ†**	**Max**	**Units**	**Conditions**
D420	LVD Voltage	LVV = 0100		2.5	2.58	2.66	V	
		LVV = 0101		2.7	2.78	2.86	V	
		LVV = 0110		2.8	2.89	2.98	V	
		LVV = 0111		3.0	3.1	3.2	V	
		LVV = 1000		3.3	3.41	3.52	V	
		LVV = 1001		3.5	3.61	3.72	V	
		LVV = 1010		3.6	3.72	3.84	V	
		LVV = 1011		3.8	3.92	4.04	V	
		LVV = 1100		4.0	4.13	4.26	V	
		LVV = 1101		4.2	4.33	4.46	V	
		LVV = 1110		4.5	4.64	4.78	V	
D421	Supply Current		ΔILVD	—	10	20	μA	
D422*	LVD Voltage Drift Temperature coefficient		TCVOUT	—	15	50	ppm/°C	
D423*	LVD Voltage Drift with respect to VDD Regulation		ΔVLVD/ ΔVDD	—	—	50	μV/V	
D424*	Low-voltage Detect Hysteresis		VLHYS	TBD	—	100	mV	

* These parameters are characterized but not tested.

Note 1: Production tested at Tamb = 25°C. Specifications over temp limits ensured by characterization.

ADVANCE

FIGURE 15-2: BROWN-OUT RESET CHARACTERISTICS

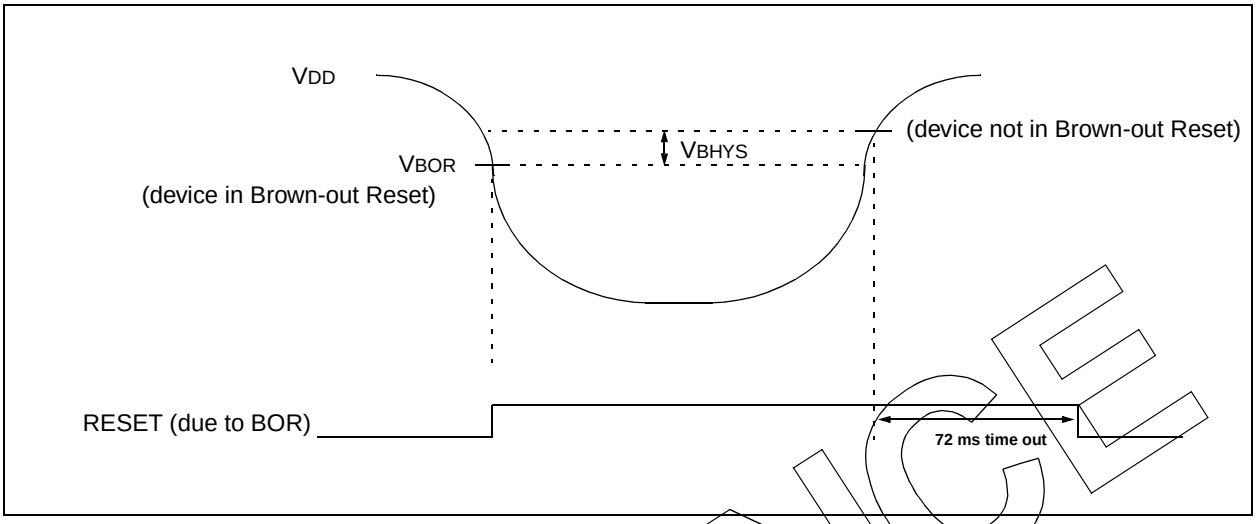

TABLE 15-4 ELECTRICAL CHARACTERISTICS: BOR

DC CHARACTERISTICS								
	Standard Operating Conditions (unless otherwise stated) Operating temperature -40°C ≤ TA ≤ +85°C for industrial and 0°C ≤ TA ≤ +70°C for commercial Operating voltage VDD range as described in DC spec Section 15.1 and Section 15.2.							
Param No.	**Characteristic**		**Symbol**	**Min**	**Typ**	**Max**	**Units**	**Conditions**
D005	BOR Voltage	BORV1:0 = 11	VBOR	2.5	2.58	2.66	V	
		BORV1:0 = 10		2.7	2.78	2.86		
		BORV1:0 = 01		4.2	4.33	4.46		
		BORV1:0 = 00		4.5	4.64	4.78		
D006*	BOR Voltage Drift Temperature coefficient		TCVOUT	—	15	50	ppm/°C	
D006A*	BOR Voltage Drift with respect to VDD Regulation		ΔVBOR/ ΔVDD	—	—	50	µV/V	
D007	Brown-out Hysteresis		VBHYS	TBD	—	100	mV	
D022A	Supply Current		ΔIBOR	—	10	20	µA	

* These parameters are characterized but not tested.

Note 1: Production tested at TAMB = 25°C. Specifications over temp limits ensured by characterization.

ADVANCE

 © 1999 Microchip Technology Inc.

15.5 AC Characteristics: PIC16C77X (Commercial, Industrial)

15.5.1 TIMING PARAMETER SYMBOLOGY

The timing parameter symbols have been created following one of the following formats:

1. TppS2ppS
2. TppS
3. TCC:ST (I^{2}C specifications only)
4. Ts (I^{2}C specifications only)

T			
F	Frequency	T	Time

Lowercase letters (pp) and their meanings:

pp			
cc	CCP1	osc	OSC1
ck	CLKOUT	rd	$\overline{RD}$
cs	$\overline{CS}$	rw	$\overline{RD}$ or $\overline{WR}$
di	SDI	sc	$\overline{SCK}$
do	SDO	ss	$\overline{SS}$
dt	Data in	t0	T0CKI
io	I/O port	t1	T1CKI
mc	$\overline{MCLR}$	wr	$\overline{WR}$

Uppercase letters and their meanings:

S			
F	Fall	P	Period
H	High	R	Rise
I	Invalid (Hi-impedance)	V	Valid
L	Low	Z	Hi-impedance
I^{2}C only			
AA	output access	High	High
BUF	Bus free	Low	Low

TCC:ST (I^{2}C specifications only)

CC			
HD	Hold	SU	Setup
ST			
DAT	DATA input hold	STO	STOP condition
STA	START condition		

ADVANCE

FIGURE 15-3: LOAD CONDITIONS

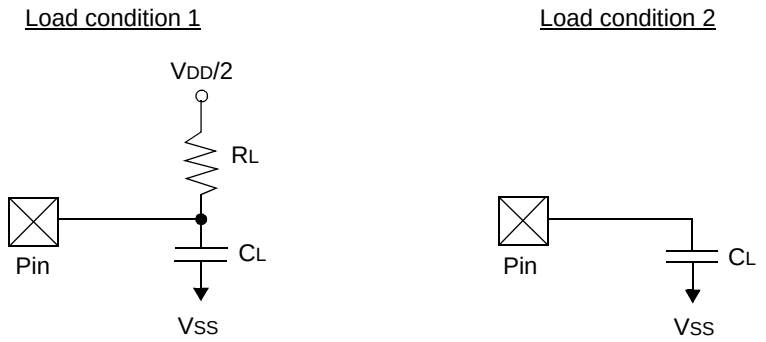

R_L = 464Ω

C_L = 50 pF for all pins except OSC2, but including PORTD and PORTE outputs as ports

15 pF for OSC2 output

Note: PORTD and PORTE are not implemented on the PIC16C773.

ADVANCE

 © 1999 Microchip Technology Inc.

15.5.2 TIMING DIAGRAMS AND SPECIFICATIONS

FIGURE 15-4: EXTERNAL CLOCK TIMING

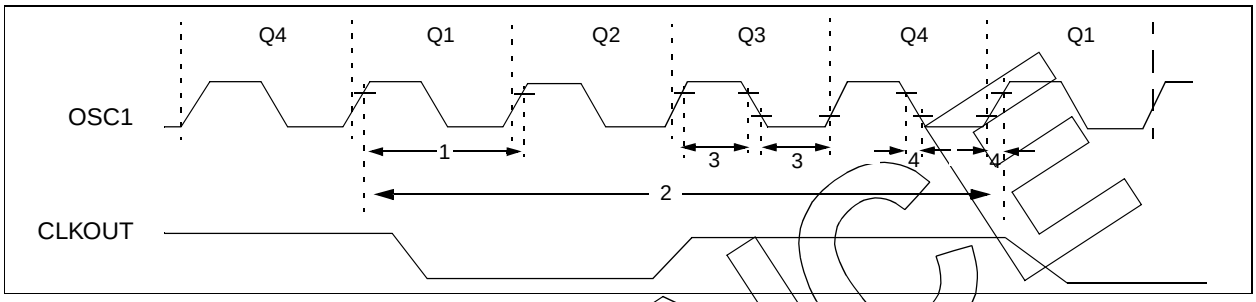

TABLE 15-5 EXTERNAL CLOCK TIMING REQUIREMENTS

Parameter No.	Sym	Characteristic	Min	Typ†	Max	Units	Conditions
	Fosc	**External CLKIN Frequency (Note 1)**	DC	—	4	MHz	XT and RC osc mode
			DC	—	4	MHz	HS osc mode (-04)
			DC	—	20	MHz	HS osc mode (-20)
			DC	—	200	kHz	LP osc mode
		Oscillator Frequency (Note 1)	DC	—	4	MHz	RC osc mode
			0.1	—	4	MHz	XT osc mode
			4	—	20	MHz	HS osc mode
			5	—	200	kHz	LP osc mode
1	Tosc	**External CLKIN Period (Note 1)**	250	—	—	ns	XT and RC osc mode
			250	—	—	ns	HS osc mode (-04)
			50	—	—	ns	HS osc mode (-20)
			5	—	—	µs	LP osc mode
		Oscillator Period (Note 1)	250	—	—	ns	RC osc mode
			250	—	10,000	ns	XT osc mode
			250	—	250	ns	HS osc mode (-04)
			50	—	250	ns	HS osc mode (-20)
			5	—	—	µs	LP osc mode
2	TCY	**Instruction Cycle Time (Note 1)**	200	TCY	DC	ns	TCY = 4/FOSC
3*	TosL, TosH	**External Clock in (OSC1) High or Low Time**	100	—	—	ns	XT oscillator
			2.5	—	—	µs	LP oscillator
			15	—	—	ns	HS oscillator
4*	TosR, TosF	**External Clock in (OSC1) Rise or Fall Time**	—	—	25	ns	XT oscillator
			—	—	50	ns	LP oscillator
			—	—	15	ns	HS oscillator

* These parameters are characterized but not tested.

† Data in "Typ" column is at 5V, 25°C unless otherwise stated. These parameters are for design guidance only and are not tested.

Note 1: Instruction cycle period (TCY) equals four times the input oscillator time-base period. All specified values are based on characterization data for that particular oscillator type under standard operating conditions with the device executing code. Exceeding these specified limits may result in an unstable oscillator operation and/or higher than expected current consumption. All devices are tested to operate at "min." values with an external clock applied to the OSC1/CLKIN pin. When an external clock input is used, the "Max." cycle time limit is "DC" (no clock) for all devices.

ADVANCE

FIGURE 15-5: CLKOUT AND I/O TIMING

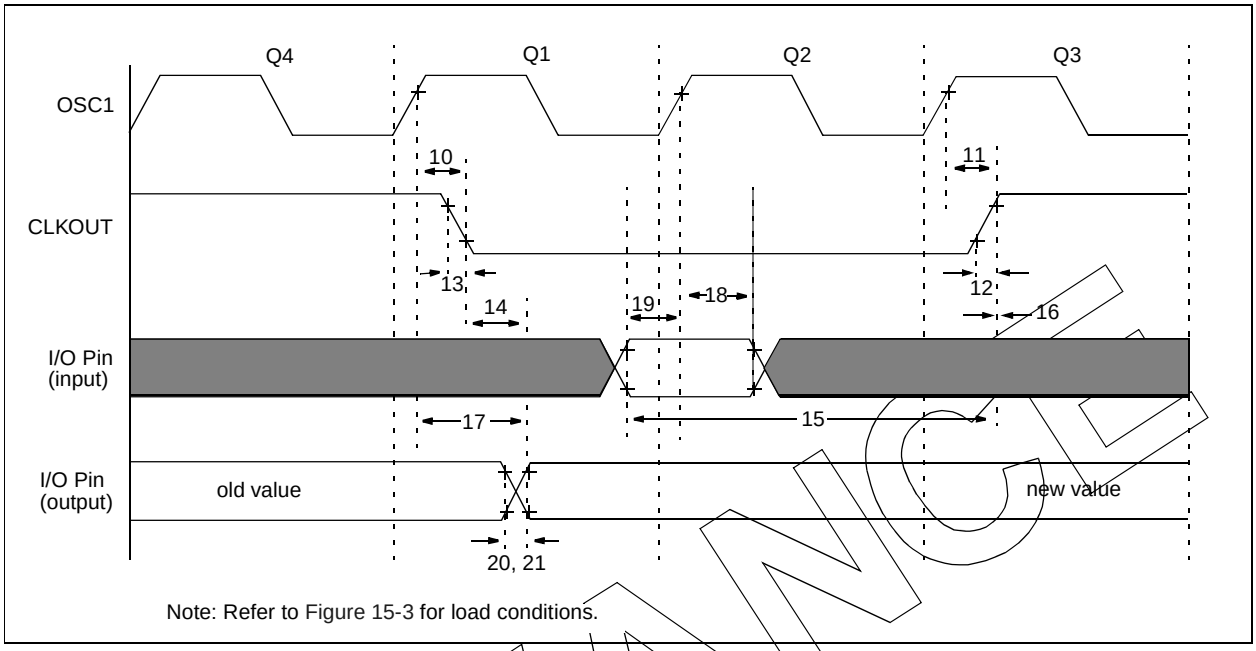

TABLE 15-6 CLKOUT AND I/O TIMING REQUIREMENTS

Parameter No.	Sym	Characteristic		Min	Typ†	Max	Units	Conditions
10*	TosH2ckL	OSC1↑ to CLKOUT↓		—	75	200	ns	Note 1
11*	TosH2ckH	OSC1↑ to CLKOUT↑		—	75	200	ns	Note 1
12*	TckR	CLKOUT rise time		—	35	100	ns	Note 1
13*	TckF	CLKOUT fall time		—	35	100	ns	Note 1
14*	TckL2ioV	CLKOUT ↓ to Port out valid		—	—	0.5TCY + 20	ns	Note 1
15*	TioV2ckH	Port in valid before CLKOUT ↑		0.25TCY + 25	—	—	ns	Note 1
16*	TckH2ioI	Port in hold after CLKOUT ↑		0	—	—	ns	Note 1
17*	TosH2ioV	OSC1↑ (Q1 cycle) to Port out valid		—	50	150	ns	
18*	TosH2ioI	OSC1↑ (Q2 cycle) to Port input invalid (I/O in hold time)	PIC16**C**77X	100	—	—	ns	
			PIC16**LC**77X	200	—	—	ns	
19*	TioV2osH	Port input valid to OSC1↑ (I/O in setup time)		0	—	—	ns	
20*	TioR	Port output rise time	PIC16**C**77X	—	10	25	ns	
			PIC16**LC**77X	—	—	60	ns	
21*	TioF	Port output fall time	PIC16**C**77X	—	10	25	ns	
			PIC16**LC**77X	—	—	60	ns	
22††*	Tinp	INT pin high or low time		TCY	—	—	ns	
23††*	Trbp	RB7:RB4 change INT high or low time		TCY	—	—	ns	

* These parameters are characterized but not tested.

† Data in "Typ" column is at 5V, 25°C unless otherwise stated. These parameters are for design guidance only and are not tested.

†† These parameters are asynchronous events not related to any internal clock edges.

Note 1: Measurements are taken in RC Mode where CLKOUT output is 4 x TOSC.

ADVANCE

 © 1999 Microchip Technology Inc.

FIGURE 15-6: RESET, WATCHDOG TIMER, OSCILLATOR START-UP TIMER AND POWER-UP TIMER TIMING

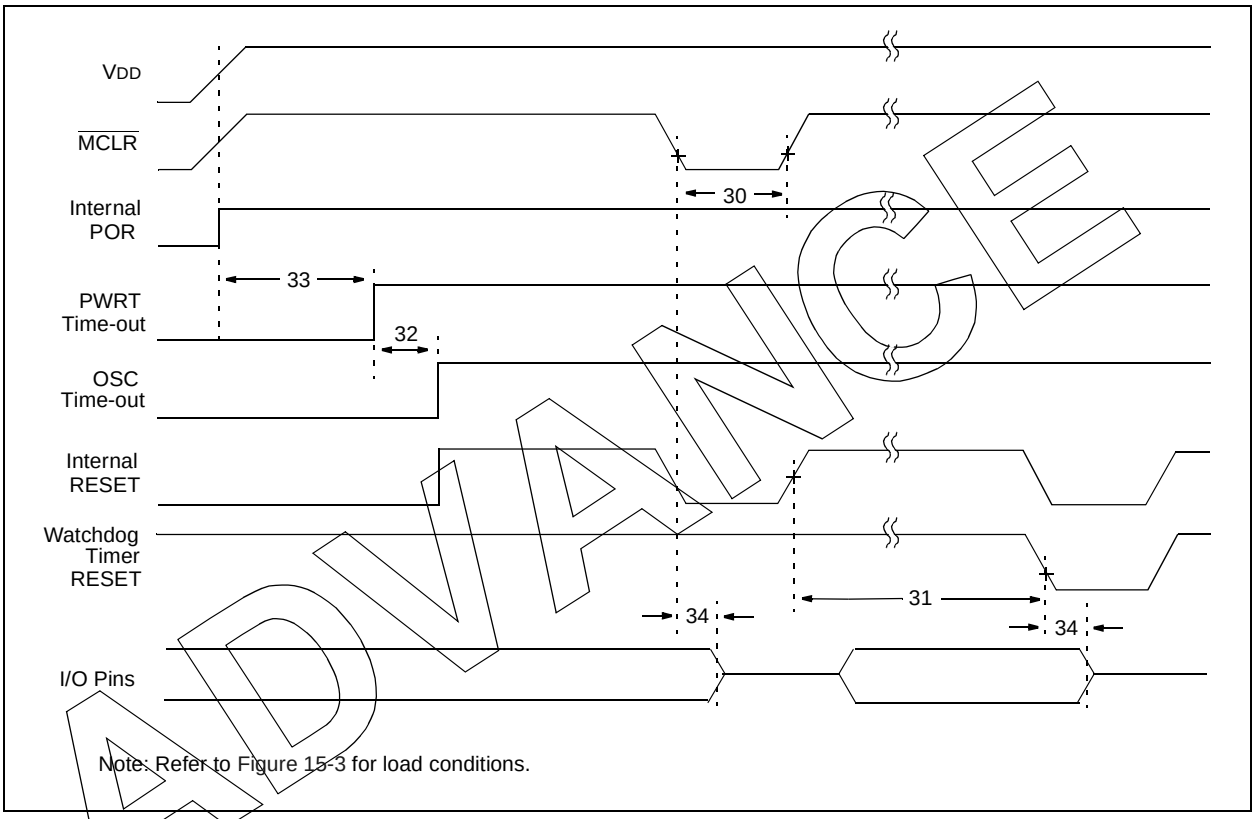

ADVANCE

FIGURE 15-7: BROWN-OUT RESET TIMING

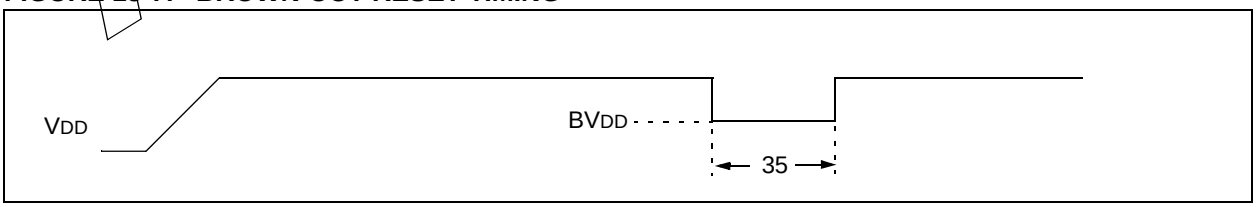

TABLE 15-7 RESET, WATCHDOG TIMER, OSCILLATOR START-UP TIMER,POWER-UP TIMER, AND BROWN-OUT RESET REQUIREMENTS

Parameter No.	Sym	Characteristic	Min	Typ†	Max	Units	Conditions
30*	TmcL	$\overline{\text{MCLR}}$ Pulse Width (low)	100	—	—	ns	VDD = 5V, -40°C to +85°C
31*	Twdt	Watchdog Timer Time-out Period (No Prescaler)	7	18	33	ms	VDD = 5V, -40°C to +85°C
32*	Tost	Oscillation Start-up Timer Period	—	1024TOSC	—	—	TOSC = OSC1 period
33*	Tpwrt	Power up Timer Period	28	72	132	ms	VDD = 5V, -40°C to +85°C
34*	TIOZ	I/O Hi-impedance from $\overline{\text{MCLR}}$ Low or Watchdog Timer Reset	—	—	100	ns	
35*	TBOR	Brown-out Reset pulse width	100	—	—	µs	VDD ≤ VBOR (D005)

* These parameters are characterized but not tested.

† Data in "Typ" column is at 5V, 25°C unless otherwise stated. These parameters are for design guidance only and are not tested.

FIGURE 15-8: BANDGAP START-UP TIME

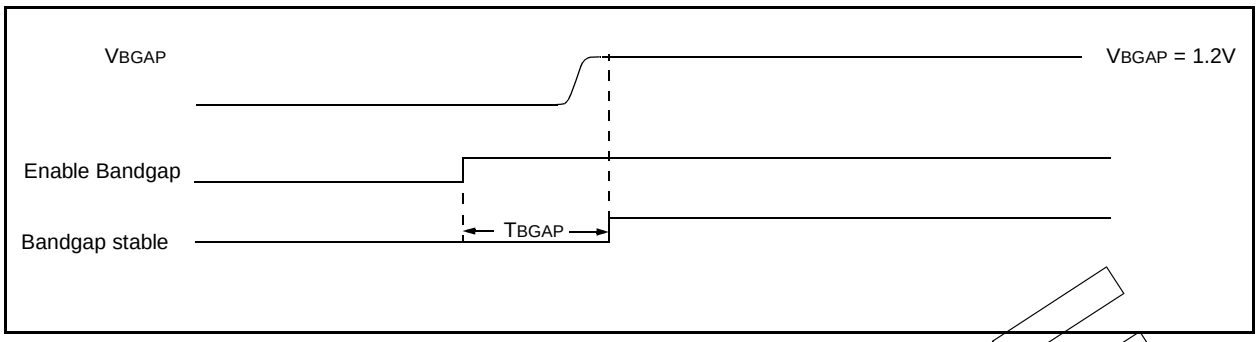

TABLE 15-8 BANDGAP START-UP TIME

Parameter No.	Sym	Characteristic	Min	Typ†	Max	Units	Conditions
36*	TBGAP	Bandgap start-up time	—	30	TBD	µs	Defined as the time between the instant that the bandgap is enabled and the moment that the bandgap reference voltage is stable.

* These parameters are characterized but not tested.

† Data in "Typ" column is at 5V, 25°C unless otherwise stated. These parameters are for design guidance only and are not tested.

ADVANCE

 © 1999 Microchip Technology Inc.

TABLE 15-9 A/D CONVERTER CHARACTERISTICS:

Param No.	Sym	Characteristic	Min	Typ†	Max	Units	Conditions
A01	NR	Resolution	—	—	12 bits	bit	Min. resolution for A/D is 1 mV, VREF+ = AVDD = 4.096V, VREF- = AVSS = 0V, VREF- ≤ VAIN ≤ VREF+
A03	EIL	Integral error	—	—	+/-2 LSb	—	VREF+ = AVDD = 4.096V, VREF- = AVSS = 0V, VREF- ≤ VAIN ≤ VREF+
A04	EDL	Differential error	—	—	+2 LSb -1 LSb	—	No missing codes to 12-bits VREF+ = AVDD = 4.096V, VREF- = AVSS = 0V, VREF- ≤ VAIN ≤ VREF+
A06	EOFF	Offset error	—	—	less than ±2 LSb	—	VREF+ = AVDD = 4.096V, VREF- = AVSS = 0V, VREF- ≤ VAIN ≤ VREF+
A07	EGN	Gain Error	—	—	+/- 2LSb	LSb	VREF+ = AVDD = 4.096V, VREF- = AVSS = 0V, VREF- ≤ VAIN ≤ VREF+
A10	—	Monotonicity	—	guaranteed(3)	—	—	AVSS ≤ VAIN ≤ VREF+
A20	VREF	Reference voltage (VREF+ VREF-)	4.096	—	VDD +0.3V	V	Absolute minimum electrical spec to ensure 12-bit accuracy.
A21	VREF+	Reference V High (AVDD or VREF+)	VREF-	—	AVDD	V	Min. resolution for A/D is 1 mV
A22	VREF-	Reference V Low (AVSS or VREF-)	AVSS	—	VREF+	V	Min. resolution for A/D is 1 mV
A25	VAIN	Analog input voltage	VREFL	—	VREFH	V	
A30	ZAIN	Recommended impedance of analog voltage source	—	—	2.5	kΩ	
A50	IREF	VREF input current (Note 2)	—	—	10	µA	During VAIN acquisition. Based on differential of VHOLD to VAIN. To charge CHOLD see Section 11.0. During A/D conversion cycle.

* These parameters are characterized but not tested.

† Data in "Typ" column is at 5V, 25°C unless otherwise stated. These parameters are for design guidance only and are not tested.

Note 1: When A/D is off, it will not consume any current other than minor leakage current. The power down current spec includes any such leakage from the A/D module.

2: VREF current is from External VREF+, OR VREF-, or AVSS, or AVDD pin, whichever is selected as reference input.

3: The A/D conversion result never decreases with an increase in the input voltage and has no missing codes.

PRELIMINARY

FIGURE 15-9: A/D CONVERSION TIMING (NORMAL MODE)

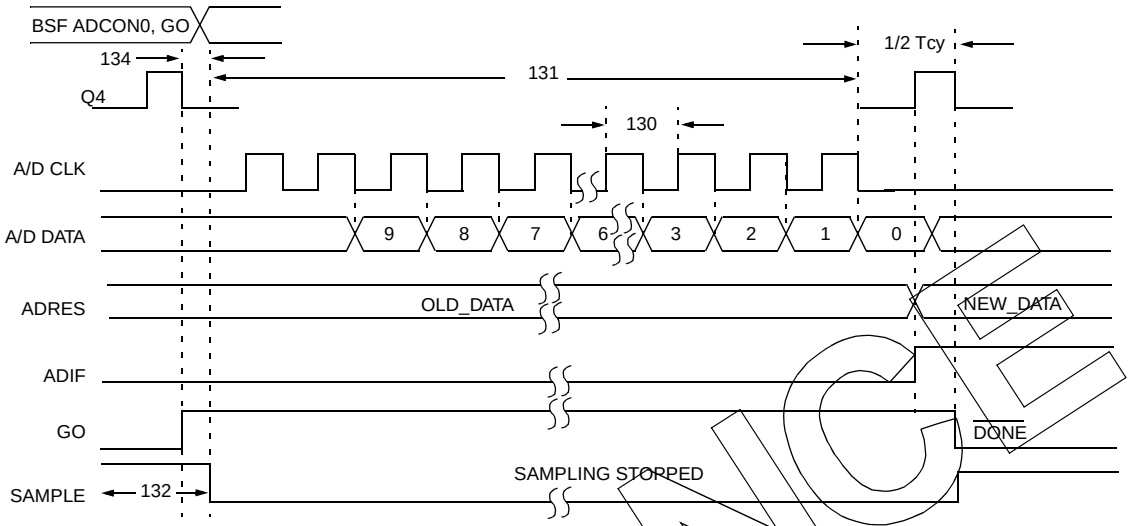

Note 1: If the A/D clock source is selected as RC, a time of TCY is added before the A/D clock starts. This allows the SLEEP instruction to be executed.

TABLE 15-10 A/D CONVERSION REQUIREMENTS

Parameter No.	Sym	Characteristic	Min	Typ†	Max	Units	Conditions
130*	TAD	A/D clock period	1.6	—	—	µs	Tosc based, VREF ≥ 2.5V
			3.0	—	—	µs	Tosc based, VREF full range
130*	TAD	A/D Internal RC oscillator period					ADCS1:ADCS0 = 11 (RC mode)
			3.0	6.0	9.0	µs	At VDD = 2.5V
			2.0	4.0	6.0	µs	At VDD = 5.0V
131*	TCNV	Conversion time (not including acquisition time) (Note 1)	—	13TAD	—	TAD	Set GO bit to new data in A/D result register
132*	TACQ	Acquisition Time	Note 2	11.5	—	µs	
			5*	—	—	µs	The minimum time is the amplifier settling time. This may be used if the “new” input voltage has not changed by more than 1LSb (i.e 1mV @ 4.096V) from the last sampled voltage (as stated on CHOLD).
134*	TGO	Q4 to A/D clock start	—	TOSC/2	—	—	If the A/D clock source is selected as RC, a time of TCY is added before the A/D clock starts. This allows the SLEEP instruction to be executed.

* These parameters are characterized but not tested.

† Data in “Typ” column is at 5V, 25°C unless otherwise stated. These parameters are for design guidance only and are not tested.

Note 1: ADRES register may be read on the following TCY cycle.

2: See Section 11.6 for minimum conditions.

ADVANCE

 © 1999 Microchip Technology Inc.

FIGURE 15-10: A/D CONVERSION TIMING (SLEEP MODE)

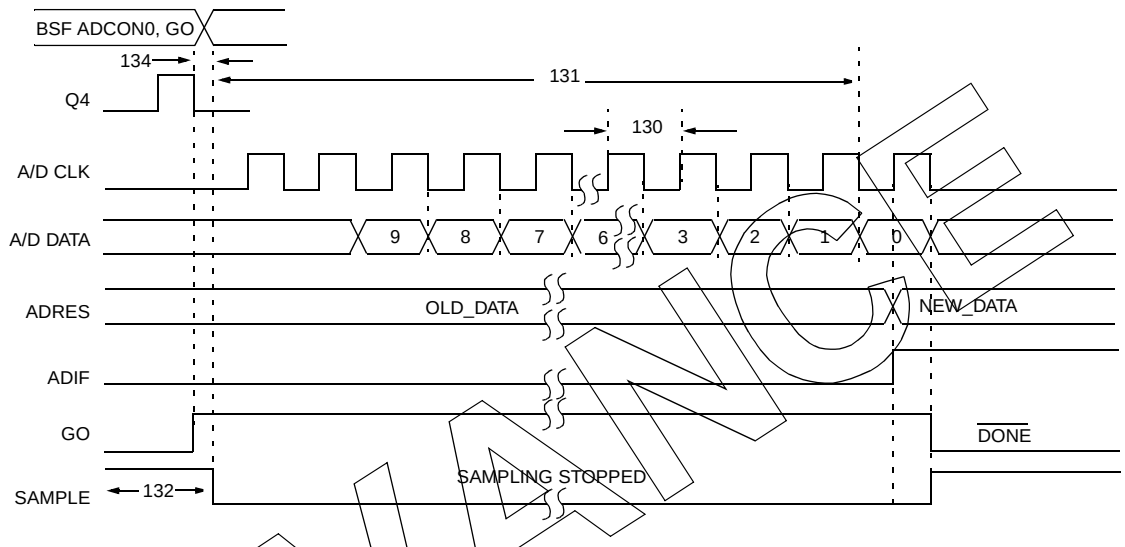

Note 1: If the A/D clock source is selected as RC, a time of TCY is added before the A/D clock starts. This allows the SLEEP instruction to be executed.

TABLE 15-11 A/D CONVERSION REQUIREMENTS

Parameter No.	Sym	Characteristic	Min	Typ†	Max	Units	Conditions
130*	TAD	A/D clock period	1.6	—	—	µs	VREF ≥ 2.5V
			TBD	—	—	µs	VREF full range
130*	TAD	A/D Internal RC oscillator period	3.0	6.0	9.0	µs	ADCS1:ADCS0 = 11 (RC mode) At VDD = 3.0V
			2.0	4.0	6.0	µs	At VDD = 5.0V
131*	TCNV	Conversion time (not including acquisition time)(Note 1)	—	13TAD	—	—	
132*	TACQ	Acquisition Time	Note 2	11.5	—	µs	
			5*	—	—	µs	The minimum time is the amplifier settling time. This may be used if the “new” input voltage has not changed by more than 1LSb (i.e 1mV @ 4.096V) from the last sampled voltage (as stated on CHOLD).
134*	TGO	Q4 to A/D clock start	—	TOSC/2 + TCY	—	—	If the A/D clock source is selected as RC, a time of TCY is added before the A/D clock starts. This allows the SLEEP instruction to be executed.

* These parameters are characterized but not tested.

† Data in “Typ” column is at 5V, 25°C unless otherwise stated. These parameters are for design guidance only and are not tested.

Note 1: ADRES register may be read on the following TCY cycle.

2: See Section 11.6 for minimum conditions.

ADVANCE

FIGURE 15-11: TIMER0 AND TIMER1 EXTERNAL CLOCK TIMINGS

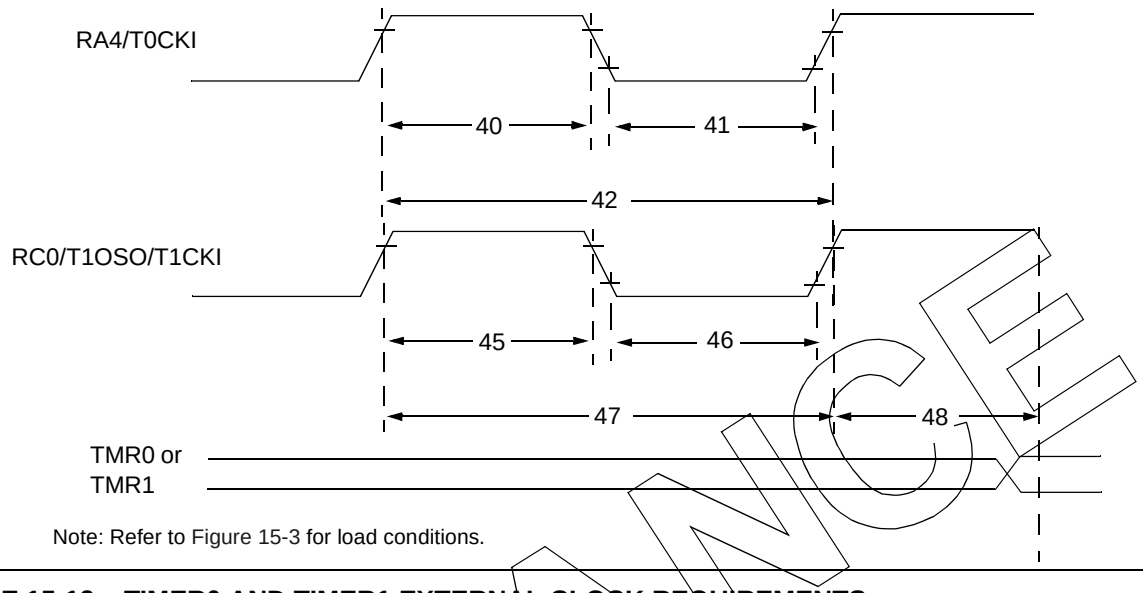

Note: Refer to Figure 15-3 for load conditions.

ADVANCE

TABLE 15-12 TIMER0 AND TIMER1 EXTERNAL CLOCK REQUIREMENTS

Param No.	Sym	Characteristic			Min	Typ†	Max	Units	Conditions
40*	Tt0H	T0CKI High Pulse Width		No Prescaler	0.5TCY + 20	—	—	ns	Must also meet parameter 42
				With Prescaler	10	—	—	ns	
41*	Tt0L	T0CKI Low Pulse Width		No Prescaler	0.5TCY + 20	—	—	ns	Must also meet parameter 42
				With Prescaler	10	—	—	ns	
42*	Tt0P	T0CKI Period		No Prescaler	TCY + 40	—	—	ns	
				With Prescaler	Greater of: 20 or TCY + 40 / N	—	—	ns	N = prescale value (2, 4, ..., 256)
45*	Tt1H	T1CKI High Time	Synchronous, Prescaler = 1		0.5TCY + 20	—	—	ns	Must also meet parameter 47
			Synchronous, Prescaler = 2,4,8	PIC16**C**77X	15	—	—	ns	
				PIC16**LC**77X	25	—	—	ns	
			Asynchronous	PIC16**C**77X	30	—	—	ns	
				PIC16**LC**77X	50	—	—	ns	
46*	Tt1L	T1CKI Low Time	Synchronous, Prescaler = 1		0.5TCY + 20	—	—	ns	Must also meet parameter 47
			Synchronous, Prescaler = 2,4,8	PIC16**C**77X	15	—	—	ns	
				PIC16**LC**77X	25	—	—	ns	
			Asynchronous	PIC16**C**77X	30	—	—	ns	
				PIC16**LC**77X	50	—	—	ns	
47*	Tt1P	T1CKI input period	Synchronous	PIC16**C**77X	Greater of: 30 OR TCY + 40 / N	—	—	ns	N = prescale value (1, 2, 4, 8)
				PIC16**LC**77X	Greater of: 50 OR TCY + 40 / N	—	—	ns	N = prescale value (1, 2, 4, 8)
			Asynchronous	PIC16**C**77X	60	—	—	ns	
				PIC16**LC**77X	100	—	—	ns	
	Ft1	Timer1 oscillator input frequency range (oscillator enabled by setting bit T1OSCEN)			DC	—	50	kHz	
48	TCKEZtmr1	Delay from external clock edge to timer increment			2Tosc	—	7Tosc	—	

* These parameters are characterized but not tested.

† Data in "Typ" column is at 5V, 25°C unless otherwise stated. These parameters are for design guidance only and are not tested.

 © 1999 Microchip Technology Inc.

FIGURE 15-12: CAPTURE/COMPARE/PWM TIMINGS (CCP1 AND CCP2)

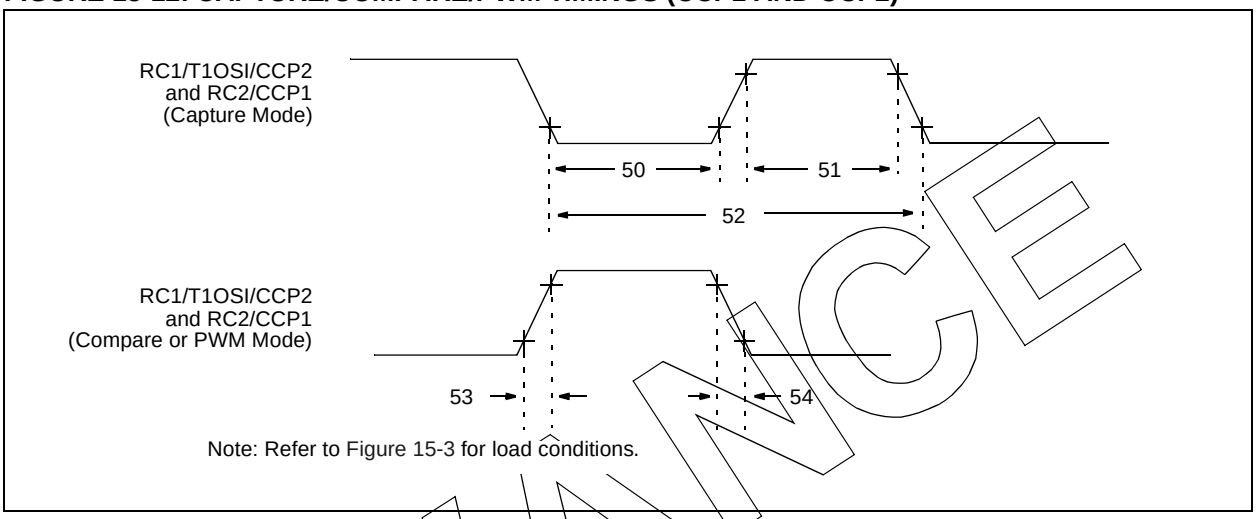

TABLE 15-13 CAPTURE/COMPARE/PWM REQUIREMENTS (CCP1 AND CCP2)

Parameter No.	Sym	Characteristic			Min	Typ†	Max	Units	Conditions
50*	TccL	CCP1 and CCP2 input low time	No Prescaler		0.5TCY + 20	—	—	ns	
			With Prescaler	PIC16**C**77X	10	—	—	ns	
				PIC16**LC**77X	20	—	—	ns	
51*	TccH	CCP1 and CCP2 input high time	No Prescaler		0.5TCY + 20	—	—	ns	
			With Prescaler	PIC16**C**77X	10	—	—	ns	
				PIC16**LC**77X	20	—	—	ns	
52*	TccP	CCP1 and CCP2 input period			3TCY + 40 / N	—	—	ns	N = prescale value (1,4 or 16)
53*	TccR	CCP1 and CCP2 output fall time		PIC16**C**77X	—	10	25	ns	
				PIC16**LC**77X	—	25	45	ns	
54*	TccF	CCP1 and CCP2 output fall time		PIC16**C**77X	—	10	25	ns	
				PIC16**LC**77X	—	25	45	ns	

* These parameters are characterized but not tested.

† Data in "Typ" column is at 5V, 25°C unless otherwise stated. These parameters are for design guidance only and are not tested.

ADVANCE

FIGURE 15-13: PARALLEL SLAVE PORT TIMING (PIC16C774)

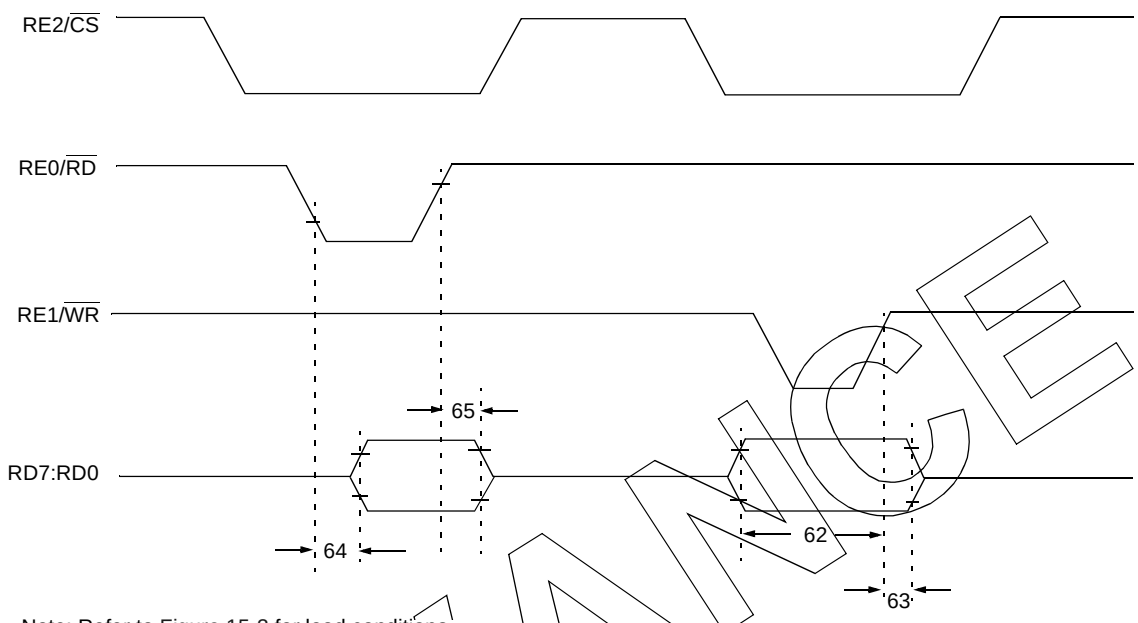

Note: Refer to Figure 15-3 for load conditions.

TABLE 15-14 PARALLEL SLAVE PORT REQUIREMENTS (PIC16C774)

Parameter No.	Sym	Characteristic		Min	Typ†	Max	Units	Conditions
62*	TdtV2wrH	Data in valid before WR↑ or CS↑ (setup time)		20 25	— —	— —	ns ns	 Extended Temperature Range Only
63*	TwrH2dtI	WR↑ or CS↑ to data–in invalid (hold time)	PIC16**C**774	20	—	—	ns	
			PIC16**LC**774	35	—	—	ns	
64*	TrdL2dtV	RD↓ and CS↓ to data–out valid		— —	— —	80 90	ns ns	 Extended Temperature Range Only
65*	TrdH2dtI	RD↑ or CS↓ to data–out invalid		10	—	30	ns	

* These parameters are characterized but not tested.

† Data in "Typ" column is at 5V, 25°C unless otherwise stated. These parameters are for design guidance only and are not tested.

ADVANCE

 © 1999 Microchip Technology Inc.

FIGURE 15-14: USART SYNCHRONOUS TRANSMISSION (MASTER/SLAVE) TIMING

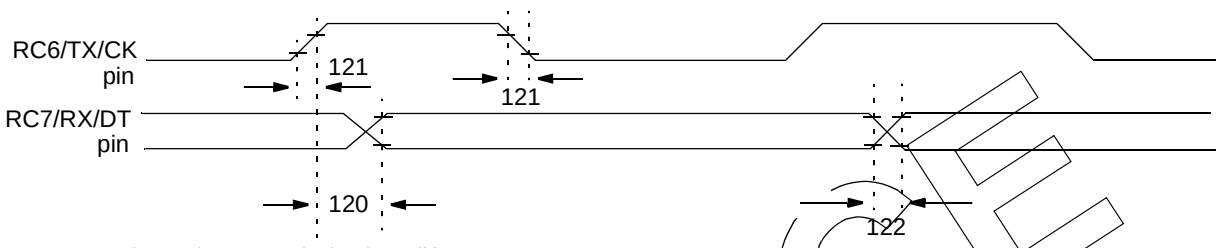

Note: Refer to Figure 15-3 for load conditions.

TABLE 15-15 USART SYNCHRONOUS TRANSMISSION REQUIREMENTS

Param No.	Sym	Characteristic		Min	Typ†	Max	Units	Conditions
120*	TckH2dtV	SYNC XMIT (MASTER & SLAVE) Clock high to data out valid	PIC16**C**774/773	—	—	80	ns	
			PIC16**LC**774/773	—	—	100	ns	
121*	Tckrf	Clock out rise time and fall time (Master Mode)	PIC16**C**774/773	—	—	45	ns	
			PIC16**LC**774/773	—	—	50	ns	
122*	Tdtrf	Data out rise time and fall time	PIC16**C**774/773	—	—	45	ns	
			PIC16**LC**774/773	—	—	50	ns	

* These parameters are characterized but not tested.

†: Data in “Typ” column is at 5V, 25°C unless otherwise stated. These parameters are for design guidance only and are not tested.

FIGURE 15-15: USART SYNCHRONOUS RECEIVE (MASTER/SLAVE) TIMING

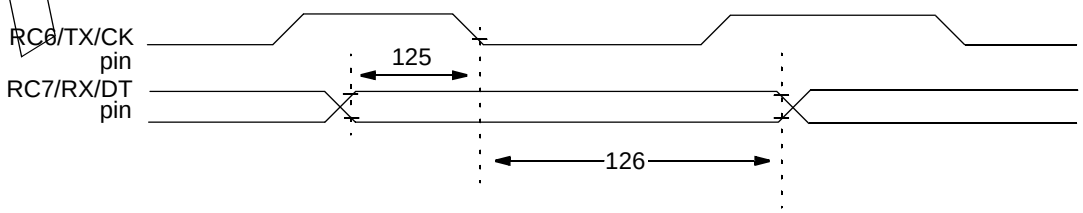

Note: Refer to Figure 15-3 for load conditions.

TABLE 15-16 USART SYNCHRONOUS RECEIVE REQUIREMENTS

Parameter No.	Sym	Characteristic	Min	Typ†	Max	Units	Conditions
125*	TdtV2ckL	SYNC RCV (MASTER & SLAVE) Data setup before CK ↓ (DT setup time)	15	—	—	ns	
126*	TckL2dtl	Data hold after CK ↓ (DT hold time)	15	—	—	ns	

* These parameters are characterized but not tested.

†: Data in “Typ” column is at 5V, 25°C unless otherwise stated. These parameters are for design guidance only and are not tested.

ADVANCE

NOTES:

 © 1999 Microchip Technology Inc.

16.0 DC AND AC CHARACTERISTICS GRAPHS AND TABLES

The graphs and tables provided in this section are for **design guidance** and are **not tested**.

In some graphs or tables, the data presented are **outside specified operating range** (i.e., outside specified V_{DD} range). This is for **information only** and devices are guaranteed to operate properly only within the specified range.

The data presented in this section is a **statistical summary** of data collected on units from different lots over a period of time and matrix samples. 'Typical' represents the mean of the distribution at 25°C. 'Max' or 'min' represents (mean + 3σ) or (mean - 3σ) respectively, where σ is standard deviation, over the whole temperature range.

Graphs and Tables not available at this time.

NOTES:

 © 1999 Microchip Technology Inc.

17.0 PACKAGING INFORMATION

17.1 Package Marking Information

28-Lead PDIP (Skinny DIP)

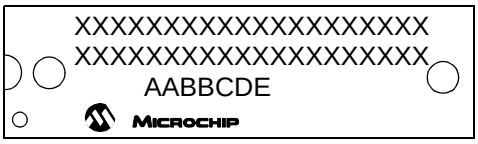

Example

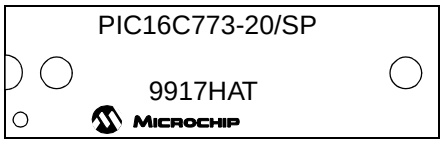

28-Lead CERDIP Windowed

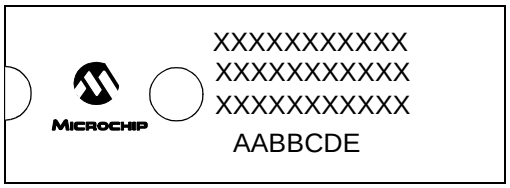

Example

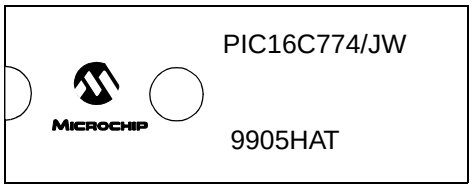

28-Lead SOIC

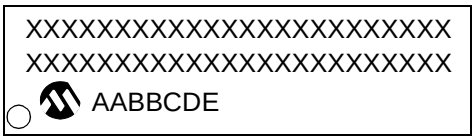

Example

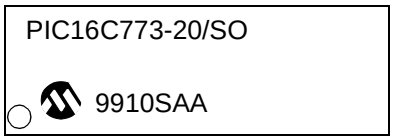

28-Lead SSOP

Example

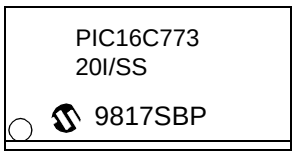

Legend:	MM...M	Microchip part number information
	XX...X	Customer specific information*
	AA	Year code (last 2 digits of calendar year)
	BB	Week code (week of January 1 is week ‘01’)
	C	Facility code of the plant at which wafer is manufactured O = Outside Vendor C = 5” Line S = 6” Line H = 8” Line
	D	Mask revision number
	E	Assembly code of the plant or country of origin in which part was assembled
Note:	In the event the full Microchip part number cannot be marked on one line, it will be carried over to the next line thus limiting the number of available characters for customer specific information.	

* Standard OTP marking consists of Microchip part number, year code, week code, facility code, mask rev#, and assembly code. For OTP marking beyond this, certain price adders apply. Please check with your Microchip Sales Office. For QTP devices, any special marking adders are included in QTP price.

Package Marking Information (Cont'd)

40-Lead PDIP

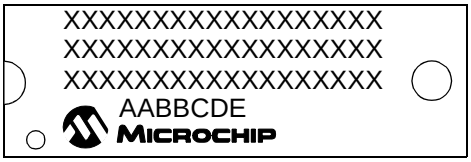

Example

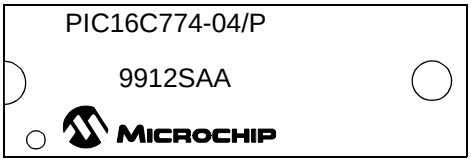

40-Lead CERDIP Windowed

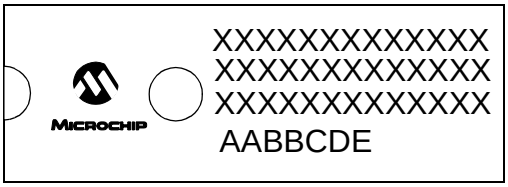

Example

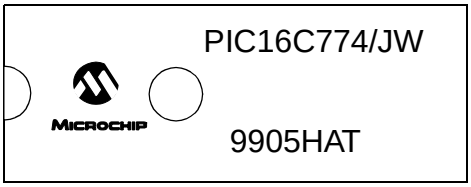

44-Lead TQFP

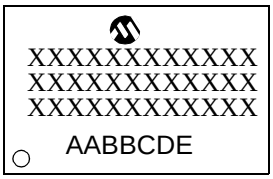

Example

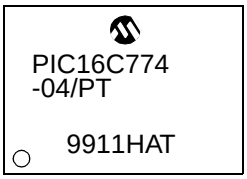

44-Lead MQFP

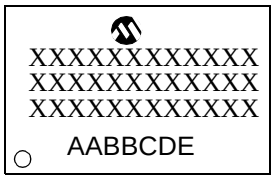

Example

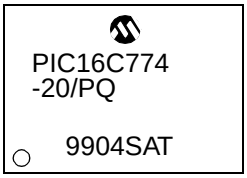

44-Lead PLCC

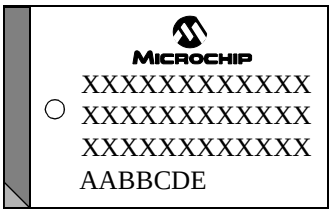

Example

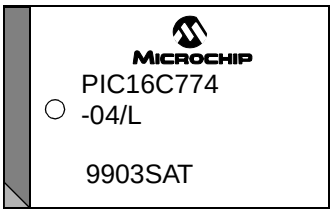

 © 1999 Microchip Technology Inc.

17.2 K04-070 28-Lead Skinny Plastic Dual In-line (SP) – 300 mil

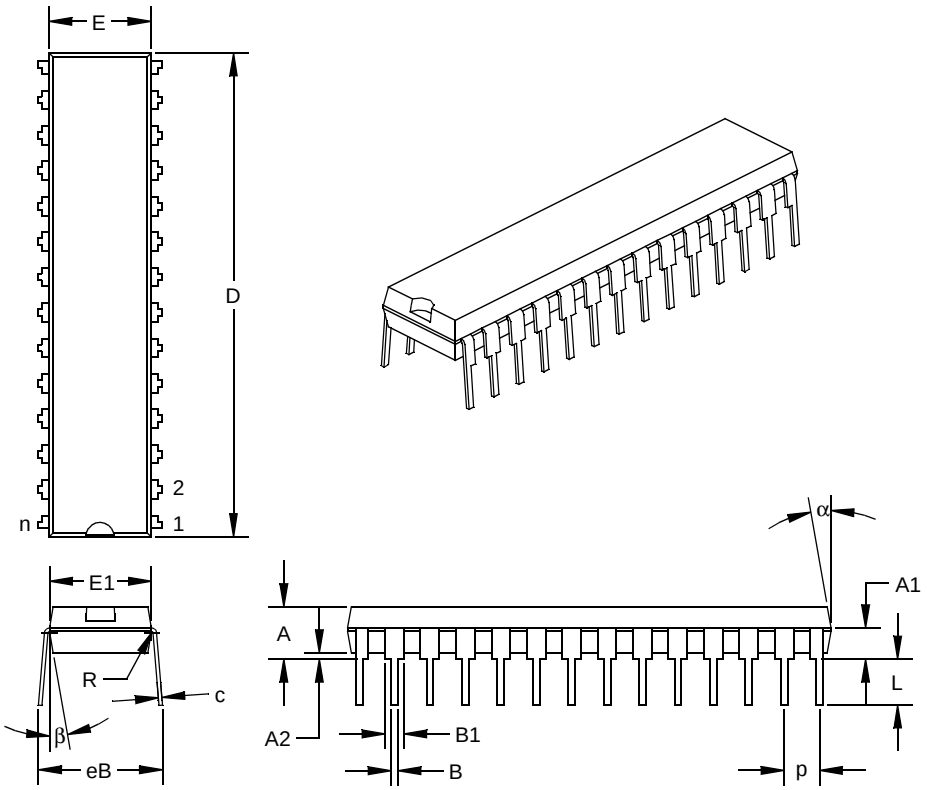

Units		INCHES*			MILLIMETERS		
Dimension Limits		MIN	NOM	MAX	MIN	NOM	MAX
PCB Row Spacing			0.300			7.62	
Number of Pins	n		28			28	
Pitch	p		0.100			2.54	
Lower Lead Width	B	0.016	0.019	0.022	0.41	0.48	0.56
Upper Lead Width	B1†	0.040	0.053	0.065	1.02	1.33	1.65
Shoulder Radius	R	0.000	0.005	0.010	0.00	0.13	0.25
Lead Thickness	c	0.008	0.010	0.012	0.20	0.25	0.30
Top to Seating Plane	A	0.140	0.150	0.160	3.56	3.81	4.06
Top of Lead to Seating Plane	A1	0.070	0.090	0.110	1.78	2.29	2.79
Base to Seating Plane	A2	0.015	0.020	0.025	0.38	0.51	0.64
Tip to Seating Plane	L	0.125	0.130	0.135	3.18	3.30	3.43
Package Length	D‡	1.345	1.365	1.385	34.16	34.67	35.18
Molded Package Width	E‡	0.280	0.288	0.295	7.11	7.30	7.49
Radius to Radius Width	E1	0.270	0.283	0.295	6.86	7.18	7.49
Overall Row Spacing	eB	0.320	0.350	0.380	8.13	8.89	9.65
Mold Draft Angle Top	α	5	10	15	5	10	15
Mold Draft Angle Bottom	β	5	10	15	5	10	15

* Controlling Parameter.

† Dimension “B1” does not include dam-bar protrusions. Dam-bar protrusions shall not exceed 0.003” (0.076 mm) per side or 0.006” (0.152 mm) more than dimension “B1.”

‡ Dimensions “D” and “E” do not include mold flash or protrusions. Mold flash or protrusions shall not exceed 0.010” (0.254 mm) per side or 0.020” (0.508 mm) more than dimensions “D” or “E.”

17.3 K04-080 28-Lead Ceramic Dual In-line with Window (JW) – 300 mil

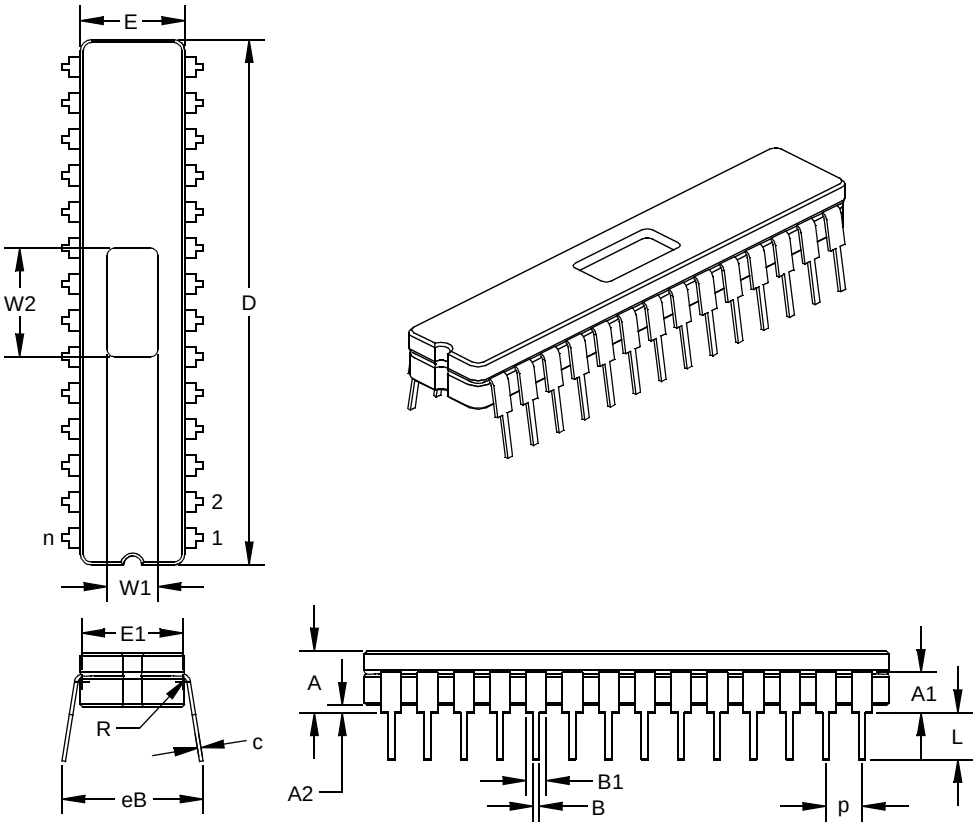

Units		INCHES*			MILLIMETERS		
Dimension Limits		MIN	NOM	MAX	MIN	NOM	MAX
PCB Row Spacing			0.300			7.62	
Number of Pins	n		28			28	
Pitch	p	0.098	0.100	0.102	2.49	2.54	2.59
Lower Lead Width	B	0.016	0.019	0.021	0.41	0.47	0.53
Upper Lead Width	B1	0.050	0.058	0.065	1.27	1.46	1.65
Shoulder Radius	R	0.010	0.013	0.015	0.25	0.32	0.38
Lead Thickness	c	0.008	0.010	0.012	0.20	0.25	0.30
Top to Seating Plane	A	0.170	0.183	0.195	4.32	4.64	4.95
Top of Lead to Seating Plane	A1	0.107	0.125	0.143	2.72	3.18	3.63
Base to Seating Plane	A2	0.015	0.023	0.030	0.00	0.57	0.76
Tip to Seating Plane	L	0.135	0.140	0.145	3.43	3.56	3.68
Package Length	D	1.430	1.458	1.485	36.32	37.02	37.72
Package Width	E	0.285	0.290	0.295	7.24	7.37	7.49
Radius to Radius Width	E1	0.255	0.270	0.285	6.48	6.86	7.24
Overall Row Spacing	eB	0.345	0.385	0.425	8.76	9.78	10.80
Window Width	W1	0.130	0.140	0.150	0.13	0.14	0.15
Window Length	W2	0.290	0.300	0.310	0.29	0.3	0.31

* Controlling Parameter.

 © 1999 Microchip Technology Inc.

17.4 K04-052 28-Lead Plastic Small Outline (SO) – Wide, 300 mil

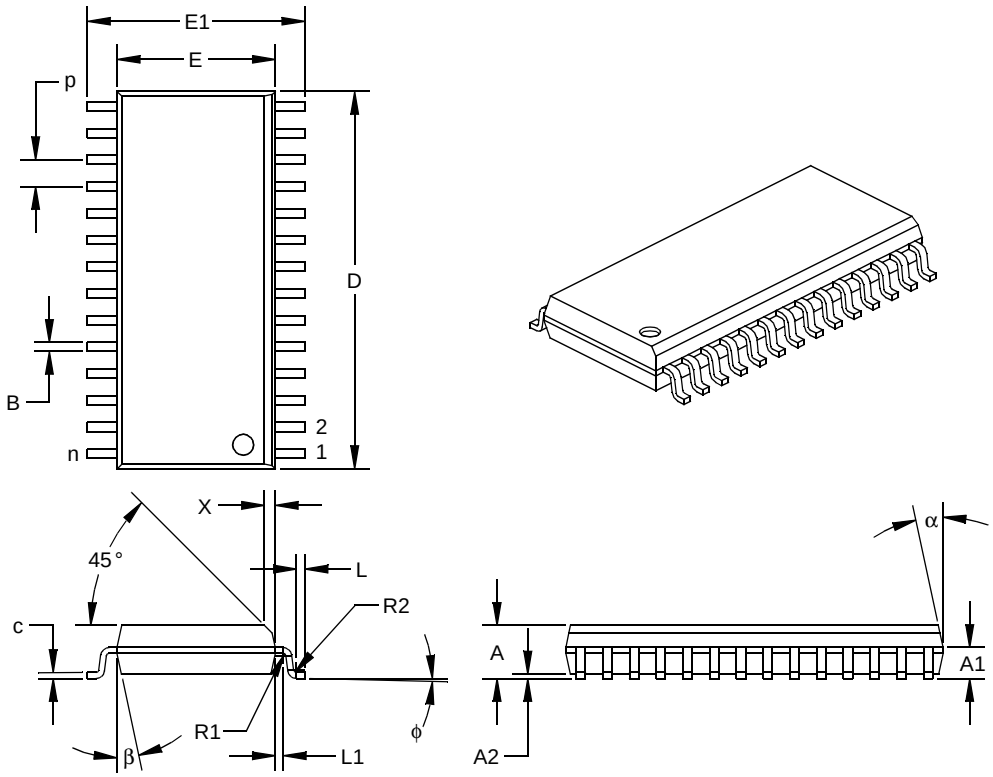

Units		INCHES*			MILLIMETERS		
Dimension Limits		MIN	NOM	MAX	MIN	NOM	MAX
Pitch	p		0.050			1.27	
Number of Pins	n		28			28	
Overall Pack. Height	A	0.093	0.099	0.104	2.36	2.50	2.64
Shoulder Height	A1	0.048	0.058	0.068	1.22	1.47	1.73
Standoff	A2	0.004	0.008	0.011	0.10	0.19	0.28
Molded Package Length	D‡	0.700	0.706	0.712	17.78	17.93	18.08
Molded Package Width	E‡	0.292	0.296	0.299	7.42	7.51	7.59
Outside Dimension	E1	0.394	0.407	0.419	10.01	10.33	10.64
Chamfer Distance	X	0.010	0.020	0.029	0.25	0.50	0.74
Shoulder Radius	R1	0.005	0.005	0.010	0.13	0.13	0.25
Gull Wing Radius	R2	0.005	0.005	0.010	0.13	0.13	0.25
Foot Length	L	0.011	0.016	0.021	0.28	0.41	0.53
Foot Angle	ϕ	0	4	8	0	4	8
Radius Centerline	L1	0.010	0.015	0.020	0.25	0.38	0.51
Lead Thickness	c	0.009	0.011	0.012	0.23	0.27	0.30
Lower Lead Width	B†	0.014	0.017	0.019	0.36	0.42	0.48
Mold Draft Angle Top	α	0	12	15	0	12	15
Mold Draft Angle Bottom	β	0	12	15	0	12	15

* Controlling Parameter.

† Dimension “B” does not include dam-bar protrusions. Dam-bar protrusions shall not exceed 0.003” (0.076 mm) per side or 0.006” (0.152 mm) more than dimension “B.”

‡ Dimensions “D” and “E” do not include mold flash or protrusions. Mold flash or protrusions shall not exceed 0.010” (0.254 mm) per side or 0.020” (0.508 mm) more than dimensions “D” or “E.”

17.5 K04-073 28-Lead Plastic Shrink Small Outline (SS) – 5.30 mm

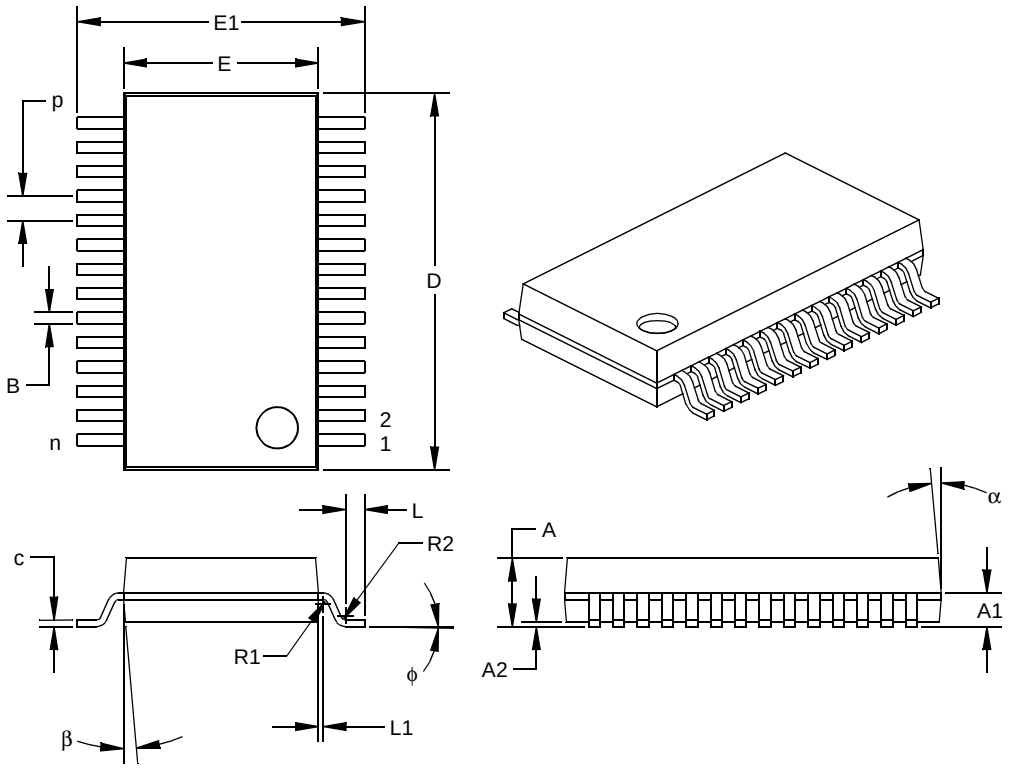

Units		INCHES			MILLIMETERS*		
Dimension Limits		MIN	NOM	MAX	MIN	NOM	MAX
Pitch	p		0.026			0.65	
Number of Pins	n		28			28	
Overall Pack. Height	A	0.068	0.073	0.078	1.73	1.86	1.99
Shoulder Height	A1	0.026	0.036	0.046	0.66	0.91	1.17
Standoff	A2	0.002	0.005	0.008	0.05	0.13	0.21
Molded Package Length	D‡	0.396	0.402	0.407	10.07	10.20	10.33
Molded Package Width	E‡	0.205	0.208	0.212	5.20	5.29	5.38
Outside Dimension	E1	0.301	0.306	0.311	7.65	7.78	7.90
Shoulder Radius	R1	0.005	0.005	0.010	0.13	0.13	0.25
Gull Wing Radius	R2	0.005	0.005	0.010	0.13	0.13	0.25
Foot Length	L	0.015	0.020	0.025	0.38	0.51	0.64
Foot Angle	ϕ	0	4	8	0	4	8
Radius Centerline	L1	0.000	0.005	0.010	0.00	0.13	0.25
Lead Thickness	c	0.005	0.007	0.009	0.13	0.18	0.22
Lower Lead Width	B†	0.010	0.012	0.015	0.25	0.32	0.38
Mold Draft Angle Top	α	0	5	10	0	5	10
Mold Draft Angle Bottom	β	0	5	10	0	5	10

* Controlling Parameter.

† Dimension “B” does not include dam-bar protrusions. Dam-bar protrusions shall not exceed 0.003” (0.076 mm) per side or 0.006” (0.152 mm) more than dimension “B.”

‡ Dimensions “D” and “E” do not include mold flash or protrusions. Mold flash or protrusions shall not exceed 0.010” (0.254 mm) per side or 0.020” (0.508 mm) more than dimensions “D” or “E.”

 © 1999 Microchip Technology Inc.

17.6 K04-016 40-Lead Plastic Dual In-line (P) – 600 mil

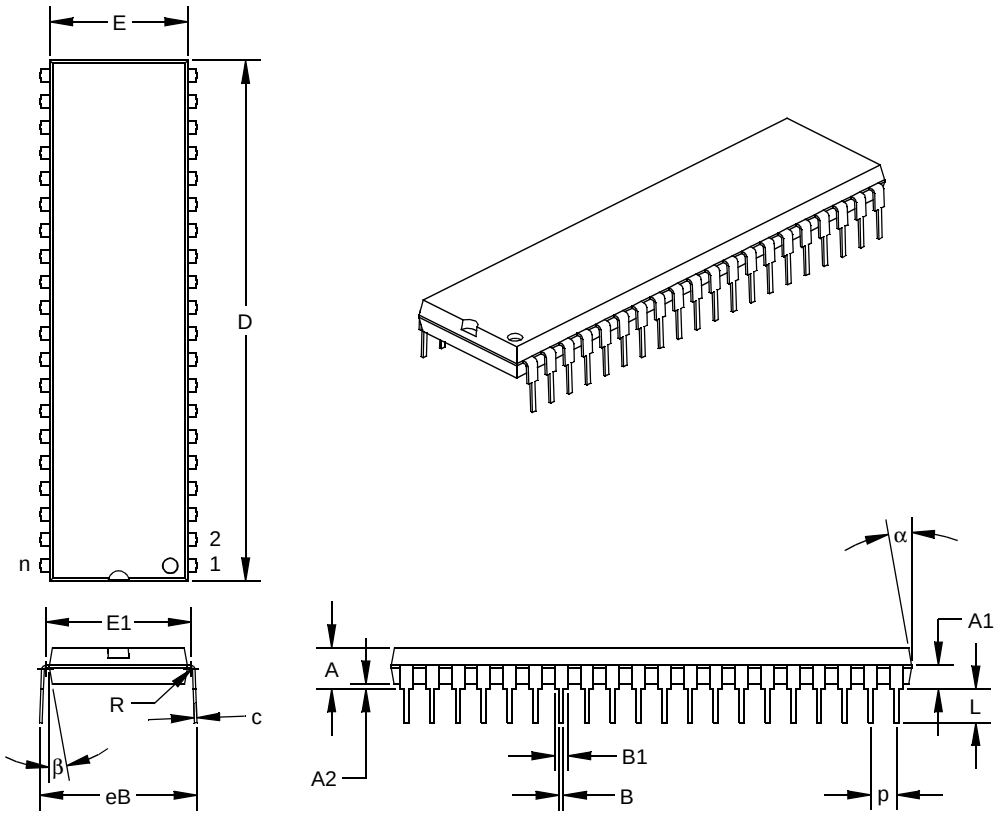

Units		INCHES*			MILLIMETERS		
Dimension Limits		MIN	NOM	MAX	MIN	NOM	MAX
PCB Row Spacing			0.600			15.24	
Number of Pins	n		40			40	
Pitch	p		0.100			2.54	
Lower Lead Width	B	0.016	0.018	0.020	0.41	0.46	0.51
Upper Lead Width	B1†	0.045	0.050	0.055	1.14	1.27	1.40
Shoulder Radius	R	0.000	0.005	0.010	0.00	0.13	0.25
Lead Thickness	c	0.009	0.010	0.011	0.23	0.25	0.28
Top to Seating Plane	A	0.110	0.160	0.160	2.79	4.06	4.06
Top of Lead to Seating Plane	A1	0.073	0.093	0.113	1.85	2.36	2.87
Base to Seating Plane	A2	0.020	0.020	0.040	0.51	0.51	1.02
Tip to Seating Plane	L	0.125	0.130	0.135	3.18	3.30	3.43
Package Length	D‡	2.013	2.018	2.023	51.13	51.26	51.38
Molded Package Width	E‡	0.530	0.535	0.540	13.46	13.59	13.72
Radius to Radius Width	E1	0.545	0.565	0.585	13.84	14.35	14.86
Overall Row Spacing	eB	0.630	0.610	0.670	16.00	15.49	17.02
Mold Draft Angle Top	α	5	10	15	5	10	15
Mold Draft Angle Bottom	β	5	10	15	5	10	15

* Controlling Parameter.

† Dimension “B1” does not include dam-bar protrusions. Dam-bar protrusions shall not exceed 0.003” (0.076 mm) per side or 0.006” (0.152 mm) more than dimension “B1.”

‡ Dimensions “D” and “E” do not include mold flash or protrusions. Mold flash or protrusions shall not exceed 0.010” (0.254 mm) per side or 0.020” (0.508 mm) more than dimensions “D” or “E.”

17.7 K04-014 40-Lead Ceramic Dual In-line with Window (JW) – 600 mil

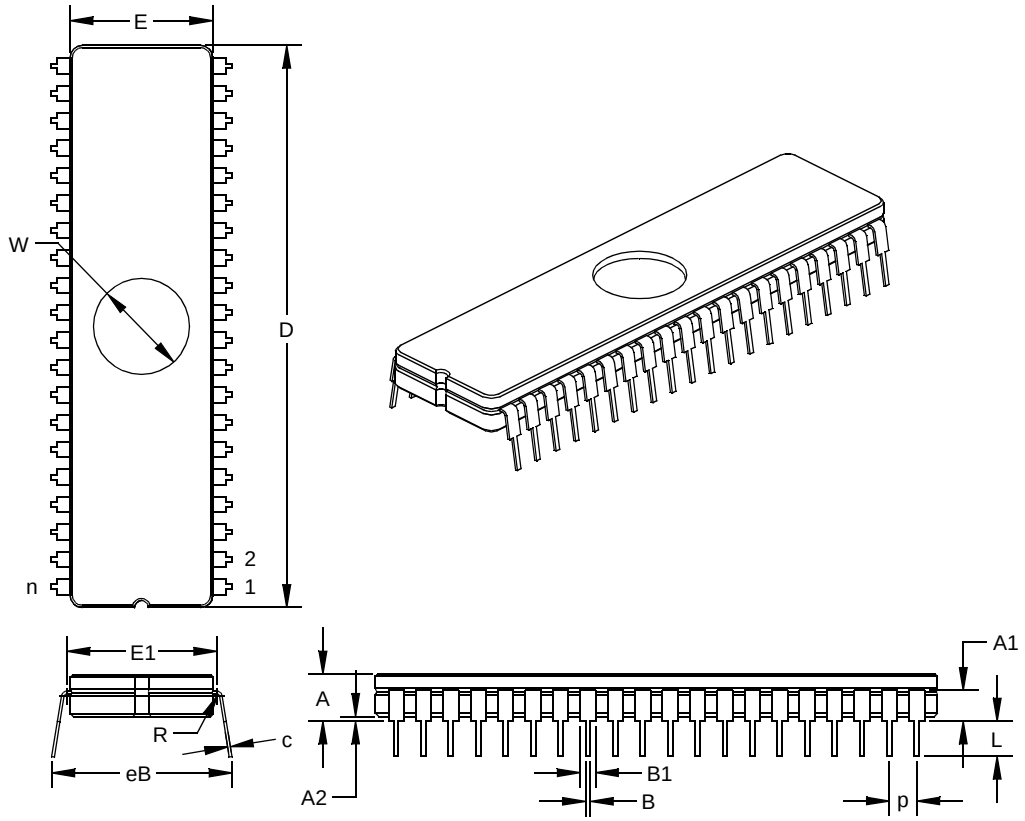

Units		INCHES*			MILLIMETERS		
Dimension Limits		MIN	NOM	MAX	MIN	NOM	MAX
PCB Row Spacing			0.600			15.24	
Number of Pins	n		40			40	
Pitch	p	0.098	0.100	0.102	2.49	2.54	2.59
Lower Lead Width	B	0.016	0.020	0.023	0.41	0.50	0.58
Upper Lead Width	B1	0.050	0.053	0.055	1.27	1.33	1.40
Shoulder Radius	R	0.000	0.005	0.010	0.00	0.13	0.25
Lead Thickness	c	0.008	0.011	0.014	0.20	0.28	0.36
Top to Seating Plane	A	0.190	0.205	0.220	4.83	5.21	5.59
Top of Lead to Seating Plane	A1	0.117	0.135	0.153	2.97	3.43	3.89
Base to Seating Plane	A2	0.030	0.045	0.060	0.00	1.14	1.52
Tip to Seating Plane	L	0.135	0.140	0.145	3.43	3.56	3.68
Package Length	D	2.040	2.050	2.060	51.82	52.07	52.32
Package Width	E	0.514	0.520	0.526	13.06	13.21	13.36
Radius to Radius Width	E1	0.560	0.580	0.600	14.22	14.73	15.24
Overall Row Spacing	eB	0.610	0.660	0.710	15.49	16.76	18.03
Window Diameter	W	0.340	0.350	0.360	8.64	8.89	9.14

* Controlling Parameter.

 © 1999 Microchip Technology Inc.

17.8 K04-076 44-Lead Plastic Thin Quad Flatpack (PT) 10x10x1 mm Body, 1.0/0.1 mm Lead Form

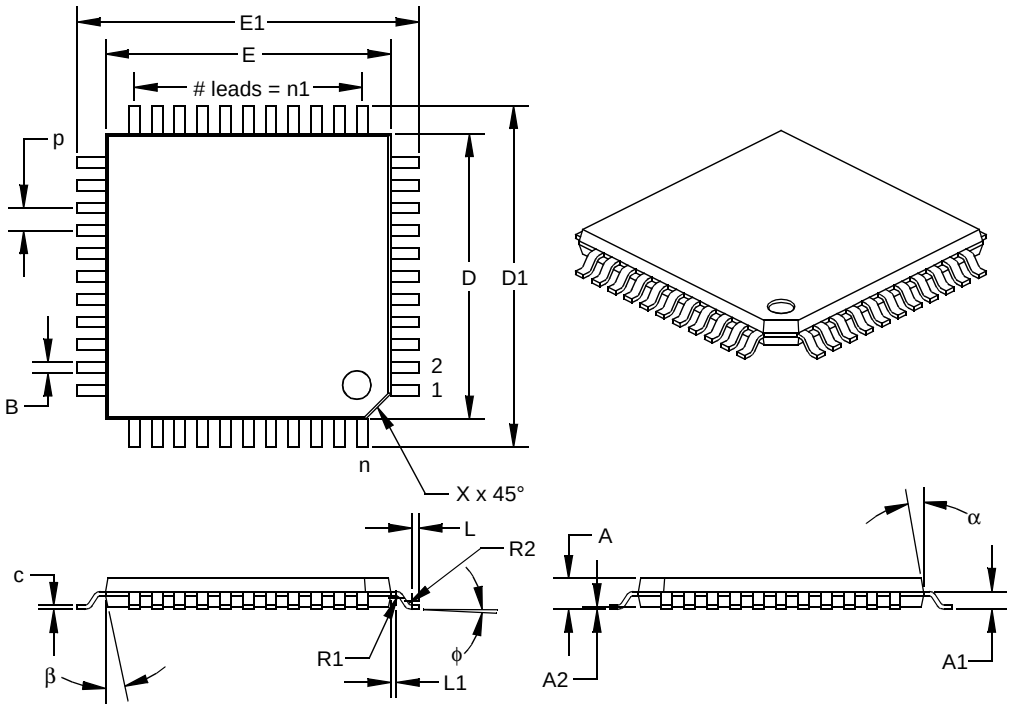

Units		INCHES			MILLIMETERS*		
Dimension Limits		MIN	NOM	MAX	MIN	NOM	MAX
Pitch	p		0.031			0.80	
Number of Pins	n		44			44	
Pins along Width	n1		11			11	
Overall Pack. Height	A	0.039	0.043	0.047	1.00	1.10	1.20
Shoulder Height	A1	0.015	0.025	0.035	0.38	0.64	0.89
Standoff	A2	0.002	0.004	0.006	0.05	0.10	0.15
Shoulder Radius	R1	0.003	0.003	0.010	0.08	0.08	0.25
Gull Wing Radius	R2	0.003	0.006	0.008	0.08	0.14	0.20
Foot Length	L	0.005	0.010	0.015	0.13	0.25	0.38
Foot Angle	ϕ	0	3.5	7	0	3.5	7
Radius Centerline	L1	0.003	0.008	0.013	0.08	0.20	0.33
Lead Thickness	c	0.004	0.006	0.008	0.09	0.15	0.20
Lower Lead Width	B†	0.012	0.015	0.018	0.30	0.38	0.45
Outside Tip Length	D1	0.463	0.472	0.482	11.75	12.00	12.25
Outside Tip Width	E1	0.463	0.472	0.482	11.75	12.00	12.25
Molded Pack. Length	D‡	0.390	0.394	0.398	9.90	10.00	10.10
Molded Pack. Width	E‡	0.390	0.394	0.398	9.90	10.00	10.10
Pin 1 Corner Chamfer	X	0.025	0.035	0.045	0.64	0.89	1.14
Mold Draft Angle Top	α	5	10	15	5	10	15
Mold Draft Angle Bottom	β	5	12	15	5	12	15

* Controlling Parameter.

† Dimension “B” does not include dam-bar protrusions. Dam-bar protrusions shall not exceed 0.003” (0.076 mm) per side or 0.006” (0.152 mm) more than dimension “B.”

‡ Dimensions “D” and “E” do not include mold flash or protrusions. Mold flash or protrusions shall not exceed 0.010” (0.254 mm) per side or 0.020” (0.508 mm) more than dimensions “D” or “E.”

JEDEC equivalent:MS-026 ACB

17.9 K04-071 44-Lead Plastic Quad Flatpack (PQ) 10x10x2 mm Body, 1.6/0.15 mm Lead Form

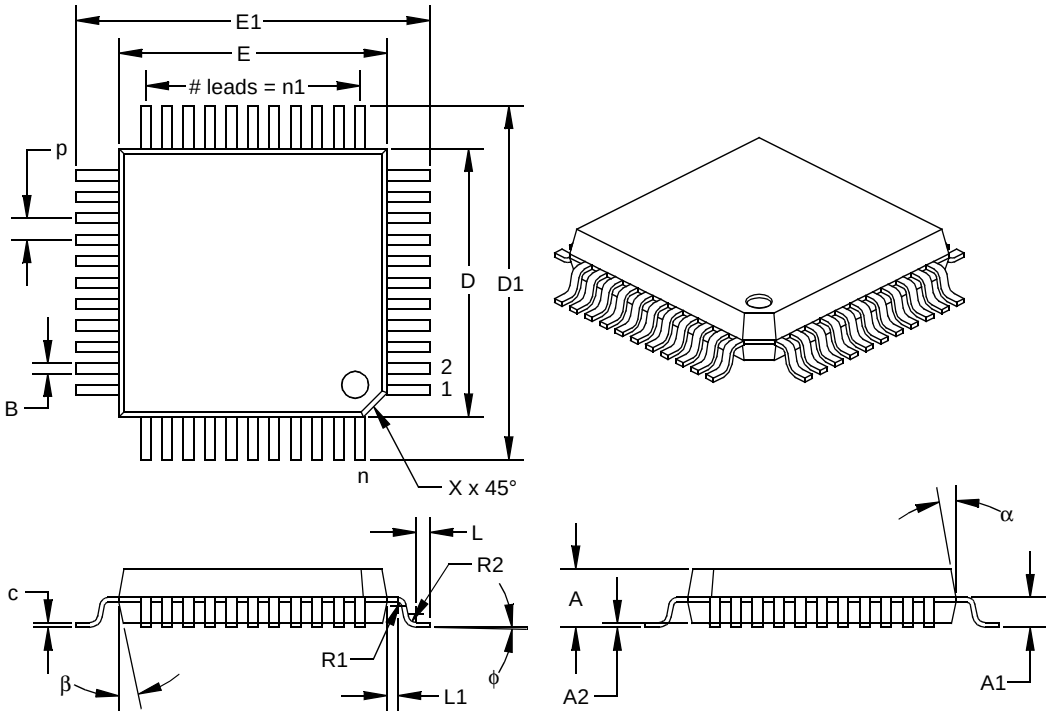

Units		INCHES			MILLIMETERS*		
Dimension Limits		MIN	NOM	MAX	MIN	NOM	MAX
Pitch	p		0.031			0.80	
Number of Pins	n		44			44	
Pins along Width	n1		11			11	
Overall Pack. Height	A	0.079	0.086	0.093	2.00	2.18	2.35
Shoulder Height	A1	0.032	0.044	0.056	0.81	1.11	1.41
Standoff	A2	0.002	0.006	0.010	0.05	0.15	0.25
Shoulder Radius	R1	0.005	0.005	0.010	0.13	0.13	0.25
Gull Wing Radius	R2	0.005	0.012	0.015	0.13	0.30	0.38
Foot Length	L	0.015	0.020	0.025	0.38	0.51	0.64
Foot Angle	ϕ	0	3.5	7	0	3.5	7
Radius Centerline	L1	0.011	0.016	0.021	0.28	0.41	0.53
Lead Thickness	c	0.005	0.007	0.009	0.13	0.18	0.23
Lower Lead Width	B†	0.012	0.015	0.018	0.30	0.37	0.45
Outside Tip Length	D1	0.510	0.520	0.530	12.95	13.20	13.45
Outside Tip Width	E1	0.510	0.520	0.530	12.95	13.20	13.45
Molded Pack. Length	D‡	0.390	0.394	0.398	9.90	10.00	10.10
Molded Pack. Width	E‡	0.390	0.394	0.398	9.90	10.00	10.10
Pin 1 Corner Chamfer	X	0.025	0.035	0.045	0.635	0.89	1.143
Mold Draft Angle Top	α	5	10	15	5	10	15
Mold Draft Angle Bottom	β	5	12	15	5	12	15

* Controlling Parameter.

† Dimension “B” does not include dam-bar protrusions. Dam-bar protrusions shall not exceed 0.003” (0.076 mm) per side or 0.006” (0.152 mm) more than dimension “B.”

‡ Dimensions “D” and “E” do not include mold flash or protrusions. Mold flash or protrusions shall not exceed 0.010” (0.254 mm) per side or 0.020” (0.508 mm) more than dimensions “D” or “E.”

JEDEC equivalent:MS-022 AB

 © 1999 Microchip Technology Inc.

17.10 K04-048 44-Lead Plastic Leaded Chip Carrier (L) – Square

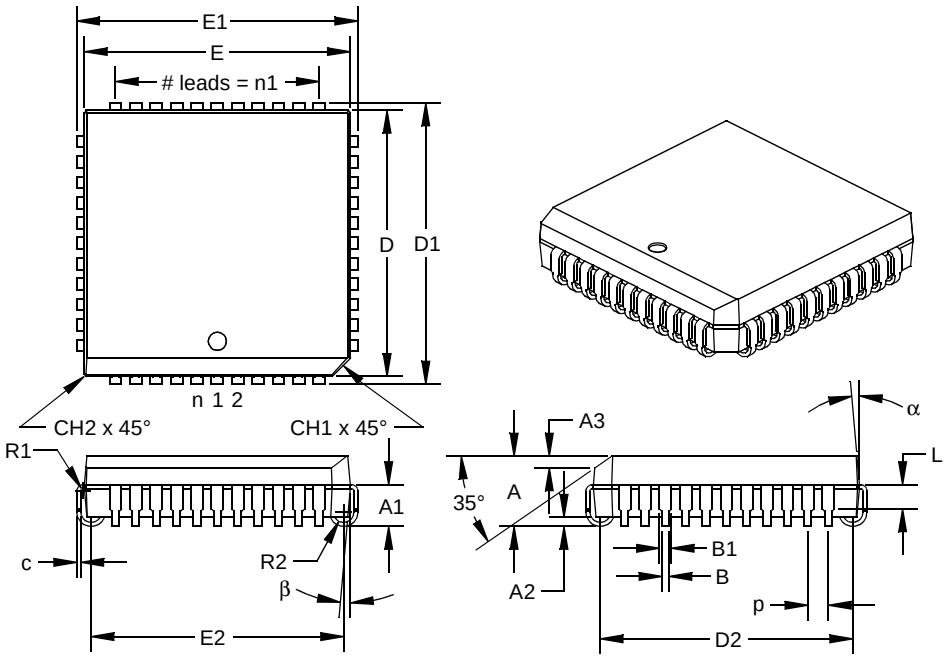

Units		INCHES*			MILLIMETERS		
Dimension Limits		MIN	NOM	MAX	MIN	NOM	MAX
Number of Pins	n		44			44	
Pitch	p		0.050			1.27	
Overall Pack. Height	A	0.165	0.173	0.180	4.19	4.38	4.57
Shoulder Height	A1	0.095	0.103	0.110	2.41	2.60	2.79
Standoff	A2	0.015	0.023	0.030	0.38	0.57	0.76
Side 1 Chamfer Dim.	A3	0.024	0.029	0.034	0.61	0.74	0.86
Corner Chamfer (1)	CH1	0.040	0.045	0.050	1.02	1.14	1.27
Corner Chamfer (other)	CH2	0.000	0.005	0.010	0.00	0.13	0.25
Overall Pack. Width	E1	0.685	0.690	0.695	17.40	17.53	17.65
Overall Pack. Length	D1	0.685	0.690	0.695	17.40	17.53	17.65
Molded Pack. Width	E‡	0.650	0.653	0.656	16.51	16.59	16.66
Molded Pack. Length	D‡	0.650	0.653	0.656	16.51	16.59	16.66
Footprint Width	E2	0.610	0.620	0.630	15.49	15.75	16.00
Footprint Length	D2	0.610	0.620	0.630	15.49	15.75	16.00
Pins along Width	n1		11			11	
Lead Thickness	c	0.008	0.010	0.012	0.20	0.25	0.30
Upper Lead Width	B1†	0.026	0.029	0.032	0.66	0.74	0.81
Lower Lead Width	B	0.015	0.018	0.021	0.38	0.46	0.53
Upper Lead Length	L	0.050	0.058	0.065	1.27	1.46	1.65
Shoulder Inside Radius	R1	0.003	0.005	0.010	0.08	0.13	0.25
J-Bend Inside Radius	R2	0.015	0.025	0.035	0.38	0.64	0.89
Mold Draft Angle Top	α	0	5	10	0	5	10
Mold Draft Angle Bottom	β	0	5	10	0	5	10

* Controlling Parameter.

† Dimension “B1” does not include dam-bar protrusions. Dam-bar protrusions shall not exceed 0.003” (0.076 mm) per side or 0.006” (0.152 mm) more than dimension “B1.”

‡ Dimensions “D” and “E” do not include mold flash or protrusions. Mold flash or protrusions shall not exceed 0.010" (0.254 mm) per side or 0.020" (0.508 mm) more than dimensions “D” or “E.”

JEDEC equivalent:MO-047 AC

NOTES:

 © 1999 Microchip Technology Inc.

APPENDIX A: REVISION HISTORY

Version	Date	Revision Description
A	99	This is a new data sheet. However, the devices described in this data sheet are the upgrades to the devices found in the *PIC16C7X Data Sheet*, DS30390E.

APPENDIX B: DEVICE DIFFERENCES

The differences between the devices in this data sheet are listed in Table B-1.

TABLE B-1: DEVICE DIFFERENCES

Difference	PIC16C773	PIC16C774
A/D	6 channels, 12 bits	10 channels, 12 bits
Parallel Slave Port	no	yes
Packages	28-pin PDIP, 28-pin windowed CERDIP, 28-pin SOIC, 28-pin SSOP	40-pin PDIP, 40-pin windowed CERDIP, 44-pin TQFP, 44-pin MQFP, 44-pin PLCC

APPENDIX C: CONVERSION CONSIDERATIONS

Considerations for converting from previous versions of devices to the ones listed in this data sheet are listed in the following:

PIC16C774 vs. PIC16C74A

- RA2 Added V_{REF}- and VRL
- RA3 Added V_{REF}+ and VRH
- RA5 Removed $\overline{SS}$
- Pin 11 AV_{DD} vs. V_{DD}
- Pin 12 AV_{SS} vs. V_{SS}
- RB1 Added $\overline{SS}$, $\overline{SS}$ is now ST vs. TTL
- RB2 Added AN8
- RB3 Added AN9 and LVDIN

PIC16C773 vs. PIC16C73A

- RA2 Added V_{REF}- and VRL
- RA3 Added V_{REF}+ and VRH
- Pin 7 AV_{DD} vs. removed RA5/$\overline{SS}$/AN4
- Pin 8 AV_{SS} vs. V_{SS}
- RB1 Added $\overline{SS}$, $\overline{SS}$ is now ST vs. TTL
- RB2 Added AN8
- RB3 Added AN9 and LVDIN

Program Memory Differences

none

Data Memory Differences

1. Data memory size has increased to 256 from 192 by adding bank 2.
2. Bank 1 locations 0xF0 - 0xFF are now common RAM locations across banks 0-3.

Peripheral Differences

1. 12-bit A/D replaces 8-bit A/D.
2. Master Synchronous Serial Port replace Synchronous Serial Port.
3. USART adds 9-bit address mode to module.
4. Bandgap Voltage Reference added.
5. Low-voltage Detect Module added.
6. Selectable Brown-out Reset voltages added.

NOTES:

 © 1999 Microchip Technology Inc.

INDEX

A

A/D 117
A/D Converter Enable (ADIE Bit) 19
A/D Converter Flag (ADIF Bit) 20
ADCON0 Register 117
ADCON1 Register 117, 118
ADRES Register 117
Analog Port Pins 7, 8, 9, 36, 37
Block Diagram 120
Configuring Analog Port 119
Conversion time 125
Conversions 121
converter characteristics 156, 157, 158, 165
Faster Conversion - Lower Resolution Tradeoff 125
Internal Sampling Switch (Rss) Impedence 123
Operation During Sleep 126
Sampling Requirements 123
Sampling Time 123
Source Impedance 123
Special Event Trigger (CCP) 49
A/D Conversion Clock 121
$\overline{\text{ACK}}$ 64
Acknowledge Data bit, AKD 56
Acknowledge Pulse 64
Acknowledge Sequence Enable bit, AKE 56
Acknowledge Status bit, AKS 56
ADCON0 Register 117
ADCON1 Register 117, 118
ADRES 117
ADRES Register 13, 14, 117, 126
AKD 56
AKE 56
AKS 56, 79
Application Note AN578, "Use of the SSP Module in the I2C Multi-Master Environment." 63
Architecture
PIC16C63A/PIC16C73B Block Diagram 5
PIC16C65B/PIC16C74B Block Diagram 6
Assembler
MPASM Assembler 147

B

Banking, Data Memory 11, 16
Baud Rate Generator 73
BF 54, 64, 79, 82
Block Diagrams
Baud Rate Generator 73
I^2C Master Mode 71
I^2C Module 63
SSP (I^2C Mode) 63
SSP (SPI Mode) 57
BOR. *See* Brown-out Reset
BRG 73
Brown-out Reset (BOR) 127, 131, 132, 133, 134
BOR Status ($\overline{\text{BOR}}$ Bit) 23
Buffer Full bit, BF 64
Buffer Full Status bit, BF 54
Bus Arbitration 90
Bus Collision
Section 90
Bus Collision During a RESTART Condition 93
Bus Collision During a Start Condition 91
Bus Collision During a Stop Condition 94

C

Capture (CCP Module) 48
Block Diagram 48
CCP Pin Configuration 48
CCPR1H:CCPR1L Registers 48
Changing Between Capture Prescalers 48
Software Interrupt 48
Timer1 Mode Selection 48
Capture/Compare/PWM (CCP) 47
CCP1 47
CCP1CON Register 47
CCPR1H Register 47
CCPR1L Register 47
Enable (CCP1IE Bit) 19
Flag (CCP1IF Bit) 20
RC2/CCP1 Pin 7, 9
CCP2 47
CCP2CON Register 47
CCPR2H Register 47
CCPR2L Register 47
Enable (CCP2IE Bit) 21
Flag (CCP2IF Bit) 22
RC1/T1OSI/CCP2 Pin 7, 9
Interaction of Two CCP Modules 47
Timer Resources 47
CCP1CON 15
CCP1CON Register 47
CCP1M3:CCP1M0 Bits 47
CCP1X:CCP1Y Bits 47
CCP2CON 15
CCP2CON Register 47
CCP2M3:CCP2M0 Bits 47
CCP2X:CCP2Y Bits 47
CCPR1H Register 13, 15
CCPR1L Register 15
CCPR2H Register 13, 15
CCPR2L Register 13, 15
CKE 54
CKP 55
Clock Polarity Select bit, CKP 55
Code Examples
Loading the SSPBUF register 58
Code Protection 127, 141
Compare (CCP Module) 49
Block Diagram 49
CCP Pin Configuration 49
CCPR1H:CCPR1L Registers 49
Software Interrupt 49
Special Event Trigger 43, 49
Timer1 Mode Selection 49
Configuration Bits 127
Conversion Considerations 187

D

D/$\overline{\text{A}}$ 54
Data Memory 11
Bank Select (RP1:RP0 Bits) 11, 16
General Purpose Registers 11
Register File Map 12
Special Function Registers 13
Data/$\overline{\text{Address}}$ bit, D/$\overline{\text{A}}$ 54
DC Characteristics
PIC16C73 152
PIC16C74 152
Development Support 145
Development Tools 145
Device Differences 187
Direct Addressing 25

E

Errata 4
External Power-on Reset Circuit 132

F

Firmware Instructions 143
Flowcharts
  Acknowledge 86
  Master Receiver 83
  Master Transmit 80
  Restart Condition 77
  Start Condition 75
  Stop Condition 88
FSR Register 13, 14, 15
Fuzzy Logic Dev. System (*fuzzy*TECH®-MP) 147

G

GCE 56
General Call Address Sequence 69
General Call Address Support 69
General Call Enable bit, GCE 56

I

I/O Ports 27
I^2C 63
I^2C Master Mode Receiver Flowchart 83
I^2C Master Mode Reception 82
I^2C Master Mode Restart Condition 76
I^2C Mode Selection 63
I^2C Module
  Acknowledge Flowchart 86
  Acknowledge Sequence timing 85
  Addressing 64
  Baud Rate Generator 73
  Block Diagram 71
  BRG Block Diagram 73
  BRG Reset due to SDA Collision 92
  BRG Timing 73
  Bus Arbitration 90
  Bus Collision 90
    Acknowledge 90
    Restart Condition 93
    Restart Condition Timing (Case1) 93
    Restart Condition Timing (Case2) 93
    Start Condition 91
    Start Condition Timing 91, 92
    Stop Condition 94
    Stop Condition Timing (Case1) 94
    Stop Condition Timing (Case2) 94
    Transmit Timing 90
  Bus Collision timing 90
  Clock Arbitration 89
  Clock Arbitration Timing (Master Transmit) 89
  Conditions to not give $\overline{ACK}$ Pulse 64
  General Call Address Support 69
  Master Mode 71
  Master Mode 7-bit Reception timing 84
  Master Mode Operation 72
  Master Mode Start Condition 74
  Master Mode Transmission 79
  Master Mode Transmit Sequence 72
  Master Transmit Flowchart 80
  Multi-Master Communication 90
  Multi-master Mode 72
  Operation 63
  Repeat Start Condition timing 76
  Restart Condition Flowchart 77
  Slave Mode 64
  Slave Reception 65
  Slave Transmission 65
  SSPBUF 64
  Start Condition Flowchart 75
  Stop Condition Flowchart 88
  Stop Condition Receive or Transmit timing 87
  Stop Condition timing 87
  Waveforms for 7-bit Reception 65
  Waveforms for 7-bit Transmission 66
I^2C Module Address Register, SSPADD 64
I^2C Slave Mode 64
ICEPIC Low-Cost PIC16CXXX In-Circuit Emulator 145
ID Locations 127, 141
In-Circuit Serial Programming (ICSP) 127, 141
INDF 15
INDF Register 13, 14
Indirect Addressing 25
  FSR Register 11
Instruction Format 143
Instruction Set 143
  Summary Table 144
INTCON 15
INTCON Register 18
  GIE Bit 18
  INTE Bit 18
  INTF Bit 18
  PEIE Bit 18
  RBIE Bit 18
  RBIF Bit 18, 30
  T0IE Bit 18
  T0IF Bit 18
Inter-Integrated Circuit (I^2C) 53
internal sampling switch (Rss) impedence 123
Interrupt Sources 127, 137
  Block Diagram 137
  Capture Complete (CCP) 48
  Compare Complete (CCP) 49
  Interrupt on Change (RB7:RB4) 30
  RB0/INT Pin, External 7, 8, 138
  TMR0 Overflow 40, 138
  TMR1 Overflow 41, 43
  TMR2 to PR2 Match 46
  TMR2 to PR2 Match (PWM) 45, 50
  USART Receive/Transmit Complete 97
Interrupts, Context Saving During 138
Interrupts, Enable Bits
  A/D Converter Enable (ADIE Bit) 19
  CCP1 Enable (CCP1IE Bit) 19, 48
  CCP2 Enable (CCP2IE Bit) 21
  Global Interrupt Enable (GIE Bit) 18, 137
  Interrupt on Change (RB7:RB4) Enable
  (RBIE Bit) 18, 138
  Peripheral Interrupt Enable (PEIE Bit) 18
  PSP Read/Write Enable (PSPIE Bit) 19
  RB0/INT Enable (INTE Bit) 18
  SSP Enable (SSPIE Bit) 19
  TMR0 Overflow Enable (T0IE Bit) 18
  TMR1 Overflow Enable (TMR1IE Bit) 19
  TMR2 to PR2 Match Enable (TMR2IE Bit) 19
  USART Receive Enable (RCIE Bit) 19
  USART Transmit Enable (TXIE Bit) 19

 © 1999 Microchip Technology Inc.

Interrupts, Flag Bits
A/D Converter Flag (ADIF Bit) 20
CCP1 Flag (CCP1IF Bit) 20, 48, 49
CCP2 Flag (CCP2IF Bit) 22
Interrupt on Change (RB7:RB4) Flag (RBIF Bit) 18, 30, 138
PSP Read/Write Flag (PSPIF Bit) 20
RB0/INT Flag (INTF Bit) 18
SSP Flag (SSPIF Bit) 20
TMR0 Overflow Flag (T0IF Bit) 18, 138
TMR1 Overflow Flag (TMR1IF Bit) 20
TMR2 to PR2 Match Flag (TMR2IF Bit) 20
USART Receive Flag (RCIF Bit) 20
USART Transmit Flag (TXIE Bit) 20

K

KeeLoq® Evaluation and Programming Tools 148

M

Master Clear ($\overline{\text{MCLR}}$) 7, 8
$\overline{\text{MCLR}}$ Reset, Normal Operation 131, 133, 134
$\overline{\text{MCLR}}$ Reset, SLEEP 131, 133, 134
Memory Organization
Data Memory 11
Program Memory 11
MPLAB Integrated Development Environment Software . 147
Multi-Master Communication 90
Multi-Master Mode 72

O

OPCODE Field Descriptions 143
OPTION_REG Register 17
INTEDG Bit 17
PS2:PS0 Bits 17, 39
PSA Bit 17, 39
$\overline{\text{RBPU}}$ Bit 17
T0CS Bit 17, 39
T0SE Bit 17, 39
OSC1/CLKIN Pin 7, 8
OSC2/CLKOUT Pin 7, 8
Oscillator Configuration 128
HS 128, 133
LP 128, 133
RC 128, 130, 133
XT 128, 133
Oscillator, Timer1 ..... 41, 43
Oscillator, WDT 139

P

P 54
Packaging 175
Paging, Program Memory 11, 24
Parallel Slave Port (PSP) 9, 34, 37
Block Diagram 37
RE0/$\overline{\text{RD}}$/AN5 Pin 9, 36, 37
RE1/$\overline{\text{WR}}$/AN6 Pin 9, 36, 37
RE2/$\overline{\text{CS}}$/AN7 Pin 9, 36, 37
Read Waveforms 38
Read/Write Enable (PSPIE Bit) 19
Read/Write Flag (PSPIF Bit) 20
Select (PSPMODE Bit) 34, 35, 37
Write Waveforms 37
PCL Register 13, 14
PCLATH Register 13, 14, 15
PCON Register 23, 133
$\overline{\text{BOR}}$ Bit 23
$\overline{\text{POR}}$ Bit 23
PICDEM-1 Low-Cost PICmicro Demo Board 146
PICDEM-2 Low-Cost PIC16CXX Demo Board 146
PICDEM-3 Low-Cost PIC16CXXX Demo Board 146
PICSTART® Plus Entry Level Development System 145
PIE1 Register 19
ADIE Bit 19
CCP1IE Bit 19
PSPIE Bit 19
RCIE Bit 19
SSPIE Bit 19
TMR1IE Bit 19
TMR2IE Bit 19
TXIE Bit 19
PIE2 Register 21
CCP2IE Bit 21
Pinout Descriptions
PIC16C63A/PIC16C73B 7
PIC16C65B/PIC16C74B 8
PIR1 Register 20
ADIF Bit 20
CCP1IF Bit 20
PSPIF Bit 20
RCIF Bit 20
SSPIF Bit 20
TMR1IF Bit 20
TMR2IF Bit 20
TXIF Bit 20
PIR2 Register 22
CCP2IF Bit 22
Pointer, FSR 25
POR. *See* Power-on Reset
PORTA 7, 8, 15
Analog Port Pins 7, 8
Initialization 27
PORTA Register 27
RA3:RA0 and RA5 Port Pins 28
RA4/T0CKI Pin 7, 8, 28
RA5/$\overline{\text{SS}}$/AN4 Pin 8
TRISA Register 27
PORTA Register 13, 126
PORTB 7, 8, 15
Initialization 29
PORTB Register 29
Pull-up Enable ($\overline{\text{RBPU}}$ Bit) 17
RB0/INT Edge Select (INTEDG Bit) 17
RB0/INT Pin, External 7, 8, 138
RB3:RB0 Port Pins 29
RB7:RB4 Interrupt on Change 138
RB7:RB4 Interrupt on Change Enable (RBIE Bit) 18, 138
RB7:RB4 Interrupt on Change Flag (RBIF Bit) ... 18, 30, 138
RB7:RB4 Port Pins 30
TRISB Register 29
PORTB Register 13, 126
PORTC 7, 9, 15
Block Diagram 32
Initialization 32
PORTC Register 32
RC0/T1OSO/T1CKI Pin 7, 9
RC1/T1OSI/CCP2 Pin 7, 9
RC2/CCP1 Pin 7, 9
RC3/SCK/SCL Pin 7, 9

RC4/SDI/SDA Pin 7, 9
RC5/SDO Pin 7, 9
RC6/TX/CK Pin 7, 9, 98
RC7/RX/DT Pin 7, 9, 98, 99
TRISC Register 32, 97
PORTC Register 13
PORTD 9, 15, 37
Block Diagram 34
Parallel Slave Port (PSP) Function 34
PORTD Register 34
TRISD Register 34
PORTD Register 13
PORTE 9, 15
Analog Port Pins 9, 36, 37
Block Diagram 35
Input Buffer Full Status (IBF Bit) 35
Input Buffer Overflow (IBOV Bit) 35
Output Buffer Full Status (OBF Bit) 35
PORTE Register 35
PSP Mode Select (PSPMODE Bit) 34, 35, 37
RE0/$\overline{\text{RD}}$/AN5 Pin 9, 36, 37
RE1/$\overline{\text{WR}}$/AN6 Pin 9, 36, 37
RE2/$\overline{\text{CS}}$/AN7 Pin 9, 36, 37
TRISE Register 35
PORTE Register 13, 126
Postscaler, Timer2
Select (TOUTPS3:TOUTPS0 Bits) 45
Postscaler, WDT 39
Assignment (PSA Bit) 17, 39
Block Diagram 40
Rate Select (PS2:PS0 Bits) 17, 39
Switching Between Timer0 and WDT 40
Power-on Reset (POR) 127, 131, 132, 133, 134
Oscillator Start-up Timer (OST) 127, 132
POR Status ($\overline{\text{POR}}$ Bit) 23
Power Control (PCON) Register 133
Power-down ($\overline{\text{PD}}$ Bit) 16
Power-on Reset Circuit, External 132
Power-up Timer (PWRT) 127, 132
Time-out ($\overline{\text{TO}}$ Bit) 16
Time-out Sequence 133
Time-out Sequence on Power-up 135, 136
PR2 Register 14
Prescaler, Capture 48
Prescaler, Timer0 39
Assignment (PSA Bit) 17, 39
Block Diagram 40
Rate Select (PS2:PS0 Bits) 17, 39
Switching Between Timer0 and WDT 40
Prescaler, Timer1 42
Select (T1CKPS1:T1CKPS0 Bits) 41
Prescaler, Timer2 50
Select (T2CKPS1:T2CKPS0 Bits) 45
PRO MATE® II Universal Programmer 145
Product Identification System 199
Program Counter
PCL Register 24
PCLATH Register 24, 138
Reset Conditions 133
Program Memory 11
Interrupt Vector 11
Paging 11, 24
Program Memory Map 11
Reset Vector 11
Program Verification 141
Programming Pin (Vpp) 7, 8
Programming, Device Instructions 143
PWM (CCP Module) 50
Block Diagram 50
CCPR1H:CCPR1L Registers 50
Duty Cycle 50
Example Frequencies/Resolutions 51
Output Diagram 50
Period 50
Set-Up for PWM Operation 51
TMR2 to PR2 Match 45, 50
TMR2 to PR2 Match Enable (TMR2IE Bit) 19
TMR2 to PR2 Match Flag (TMR2IF Bit) 20

Q

Q-Clock 50

R

R/$\overline{\text{W}}$ 54
R/W bit 64
R/$\overline{\text{W}}$ bit 65
RCE,Receive Enable bit, RCE 56
RCREG 15
RCSTA Register 15, 98
CREN Bit 98
FERR Bit 98
OERR Bit 98
RX9 Bit 98
RX9D Bit 98
SPEN Bit 97, 98
SREN Bit 98
Read/Write bit, R/$\overline{\text{W}}$ 54
Receive Overflow Indicator bit, SSPOV 55
Register File 11
Register File Map 12
Registers
FSR
Summary 15
INDF
Summary 15
INTCON
Summary 15
PCL
Summary 15
PCLATH
Summary 15
PORTB
Summary 15
SSPSTAT 54
STATUS
Summary 15
Summary 13
TMR0
Summary 15
TRISB
Summary 15
Reset 127, 131
Block Diagram 131
Reset Conditions for All Registers 134
Reset Conditions for PCON Register 133
Reset Conditions for Program Counter 133
Reset Conditions for STATUS Register 133
Restart Condition Enabled bit, RSE 56
Revision History 187
RSE 56

 © 1999 Microchip Technology Inc.

S

SAE 56
SCK 57
SCL 64
SDA 64
SDI 57
SDO 57
SEEVAL® Evaluation and Programming System 147
Serial Clock, SCK 57
Serial Clock, SCL 64
Serial Data Address, SDA 64
Serial Data In, SDI 57
Serial Data Out, SDO 57
Slave Select Synchronization 60
Slave Select, $\overline{SS}$ 57
SLEEP 127, 131, 140
SMP 54
Software Simulator (MPLAB-SIM) 147
SPBRG Register 14
SPE 56
Special Features of the CPU 127
Special Function Registers 13
    PIC16C73 13
    PIC16C73A 13
    PIC16C74 13
    PIC16C74A 13
    PIC16C76 13
    PIC16C77 13
Speed, Operating 1
SPI
    Master Mode 59
    Serial Clock 57
    Serial Data In 57
    Serial Data Out 57
    Serial Peripheral Interface (SPI) 53
    Slave Select 57
    SPI clock 59
    SPI Mode 57
SPI Clock Edge Select, CKE 54
SPI Data Input Sample Phase Select, SMP 54
SPI Master/Slave Connection 58
SPI Module
    Master/Slave Connection 58
    Slave Mode 60
    Slave Select Synchronization 60
    Slave Synch Timnig 60
$\overline{SS}$ 57
SSP 53
    Block Diagram (SPI Mode) 57
    Enable (SSPIE Bit) 19
    Flag ($\overline{SS}$PIF Bit) 20
    RA5/$\overline{SS}$/AN4 Pin 8
    RC3/SCK/SCL Pin 7, 9
    RC4/SDI/SDA Pin 7, 9
    RC5/SDO Pin 7, 9
    SPI Mode 57
    SSPADD 64
    SSPBUF 59, 64
    SSPCON1 55
    SSPCON2 56
    SSPSR 59, 64
    SSPSTAT 54, 64
    TMR2 Output for Clock Shift 45, 46
SSP I^2C
    SSP I^2C Operation 63
SSP Module
    SPI Master Mode 59
    SPI Master./Slave Connection 58
    SPI Slave Mode 60
    SSPCON1 Register 63
SSP Overflow Detect bit, SSPOV 64
SSPADD Register 14
SSPBUF 15, 64
SSPBUF Register 13
SSPCON Register 13
SSPCON1 ..... 55, 63
SSPCON2 56
SSPEN 55
SSPIF 65
SSPM3:SSPM0 55
SSPOV 55, 64, 82
SSPSTAT 54, 64
SSPSTAT Register 14
Stack 24
Start bit (S) 54
Start Condition Enabled bit, SAE 56
STATUS Register 16, 138
    C Bit 16
    DC Bit 16
    $\overline{IRP}$ Bit 16
    $\overline{PD}$ Bit 16
    RP1:RP0 Bits 16
    $\overline{TO}$ Bit 16
    Z Bit 16
Stop bit (P) 54
Stop Condition Enable bit 56
Synchronous Serial Port 53
Synchronous Serial Port Enable bit, SSPEN 55
Synchronous Serial Port Mode Select bits,
SSPM3:SSPM0 55

T

T1CON 15
T1CON Register 15, 41
    T1CKPS1:T1CKPS0 Bits 41
    T1OSCEN Bit 41
    $\overline{T1SYNC}$ Bit 41
    TMR1CS Bit 41
    TMR1ON Bit 41
T2CON Register 15, 45
    T2CKPS1:T2CKPS0 Bits 45
    TMR2ON Bit 45
    TOUTPS3:TOUTPS0 Bits 45
Timer0 39
    Block Diagram 39
    Clock Source Edge Select (T0SE Bit) 17, 39
    Clock Source Select (T0CS Bit) 17, 39
    Overflow Enable (T0IE Bit) 18
    Overflow Flag (T0IF Bit) 18, 138
    Overflow Interrupt 40, 138
    RA4/T0CKI Pin, External Clock 7, 8
Timer1 41
    Block Diagram 42
    Capacitor Selection 43
    Clock Source Select (TMR1CS Bit) 41
    External Clock Input Sync ($\overline{T1SYNC}$ Bit) 41
    Module On/Off (TMR1ON Bit) 41
    Oscillator 41, 43
    Oscillator Enable (T1OSCEN Bit) 41
    Overflow Enable (TMR1IE Bit) 19
    Overflow Flag (TMR1IF Bit) 20

Overflow Interrupt 41, 43
RC0/T1OSO/T1CKI Pin 7, 9
RC1/T1OSI/CCP2 Pin 7, 9
Special Event Trigger (CCP) 43, 49
T1CON Register 41
TMR1H Register 41
TMR1L Register 41
Timer2
Block Diagram 46
PR2 Register 45, 50
SSP Clock Shift 45, 46
T2CON Register 45
TMR2 Register 45
TMR2 to PR2 Match Enable (TMR2IE Bit) 19
TMR2 to PR2 Match Flag (TMR2IF Bit) 20
TMR2 to PR2 Match Interrupt 45, 46, 50
Timing Diagrams
Acknowledge Sequence Timing 85
Baud Rate Generator with Clock Arbitration 73
BRG Reset Due to SDA Collision 92
Brown-out Reset 163
Bus Collision
Start Condition Timing 91
Bus Collision During a Restart Condition (Case 1) 93
Bus Collision During a Restart Condition (Case2) 93
Bus Collision During a Start Condition (SCL = 0) 92
Bus Collision During a Stop Condition 94
Bus Collision for Transmit and Acknowledge 90
Capture/Compare/PWM 169
CLKOUT and I/O 162
External Clock Timing 161
I^2C Master Mode First Start bit timing 74
I^2C Master Mode Reception timing 84
I^2C Master Mode Transmission timing 81
Master Mode Transmit Clock Arbitration 89
Power-up Timer 163
Repeat Start Condition 76
Reset 163
Slave Synchronization 60
Start-up Timer 163
Stop Condition Receive or Transmit 87
Time-out Sequence on Power-up 135, 136
Timer0 168
Timer1 168
USART Asynchronous Master Transmission 103
USART Synchronous Receive 171
USART Synchronous Reception 109
USART Synchronous Transmission 108, 171
USART, Asynchronous Reception 105
Wake-up from SLEEP via Interrupt 141
Watchdog Timer 163
TMR0 15
TMR0 Register 13
TMR1H 15
TMR1H Register 13
TMR1L 15
TMR1L Register 13
TMR2 15
TMR2 Register 13
TRISA Register 14, 126
TRISB Register 14, 126
TRISC Register 14
TRISD Register 14
TRISE Register 14, 35, 126
IBF Bit 35
IBOV Bit 35
OBF Bit 35
PSPMODE Bit 34, 35, 37
TXREG 15
TXSTA Register 97
BRGH Bit 97, 99
CSRC Bit 97
SYNC Bit 97
TRMT Bit 97
TX9 Bit 97
TX9D Bit 97
TXEN Bit 97

U

UA 54
Universal Synchronous Asynchronous Receiver Transmitter (USART)
Asynchronous Receiver
Setting Up Reception 104
Timing Diagram 105
Update Address, UA 54
USART 97
Asynchronous Mode 102
Master Transmission 103
Receive Block Diagram 105
Transmit Block Diagram 102
Baud Rate Generator (BRG) 99
Baud Rate Error, Calculating 99
Baud Rate Formula 99
Baud Rates, Asynchronous Mode (BRGH=0) 100
Baud Rates, Asynchronous Mode (BRGH=1) 101
Baud Rates, Synchronous Mode 100
High Baud Rate Select (BRGH Bit) 97, 99
Sampling 99
Clock Source Select (CSRC Bit) 97
Continuous Receive Enable (CREN Bit) 98
Framing Error (FERR Bit) 98
Mode Select (SYNC Bit) 97
Overrun Error (OERR Bit) 98
RC6/TX/CK Pin 7, 9
RC7/RX/DT Pin 7, 9
RCSTA Register 98
Receive Data, 9th bit (RX9D Bit) 98
Receive Enable (RCIE Bit) 19
Receive Enable, 9-bit (RX9 Bit) 98
Receive Flag (RCIF Bit) 20
Serial Port Enable (SPEN Bit) 97, 98
Single Receive Enable (SREN Bit) 98
Synchronous Master Mode 107
Reception 109
Transmission 108
Synchronous Slave Mode 110
Transmit Data, 9th Bit (TX9D) 97
Transmit Enable (TXEN Bit) 97
Transmit Enable (TXIE Bit) 19
Transmit Enable, Nine-bit (TX9 Bit) 97
Transmit Flag (TXIE Bit) 20
Transmit Shift Register Status (TRMT Bit) 97
TXSTA Register 97

 © 1999 Microchip Technology Inc.

W

W Register 138
Wake-up from SLEEP 127, 140
    Interrupts 133, 134
    MCLR Reset 134
    Timing Diagram 141
    WDT Reset 134
Watchdog Timer (WDT) 127, 139
    Block Diagram 139
    Enable (WDTE Bit) 139
    Programming Considerations 139
    RC Oscillator 139
    Time-out Period 139
    WDT Reset, Normal Operation 131, 133, 134
    WDT Reset, SLEEP 133, 134
Waveform for General Call Address Sequence 69
WCOL 55, 74, 79, 82, 85, 87
WCOL Status Flag 74
Write Collision Detect bit, WCOL 55
WWW, On-Line Support 4

BIT/REGISTER CROSS-REFERENCE LIST

ADCS1:ADCS0 ..... ADCON0<7:6>
ADIE ..... PIE1<6>
ADIF ..... PIR1<6>
ADON ..... ADCON0<0>
BF ..... SSPSTAT<0>
$\overline{\text{BOR}}$ ..... PCON<0>
BRGH ..... TXSTA<2>
C ..... STATUS<0>
CCP1IE ..... PIE1<2>
CCP1IF ..... PIR1<2>
CCP1M3:CCP1M0 ..... CCP1CON<3:0>
CCP1X:CCP1Y ..... CCP1CON<5:4>
CCP2IE ..... PIE2<0>
CCP2IF ..... PIR2<0>
CCP2M3:CCP2M0 ..... CCP2CON<3:0>
CCP2X:CCP2Y ..... CCP2CON<5:4>
CHS2:CHS0 ..... ADCON0<5:3>
CKE ..... SSPSTAT<6>
CKP ..... SSPCON<4>
CREN ..... RCSTA<4>
CSRC ..... TXSTA<7>
D/$\overline{\text{A}}$ ..... SSPSTAT<5>
DC ..... STATUS<1>
FERR ..... RCSTA<2>
GIE ..... INTCON<7>
GO/$\overline{\text{DONE}}$ ..... ADCON0<2>
IBF ..... TRISE<7>
IBOV ..... TRISE<5>
INTE ..... INTCON<4>
INTEDG ..... OPTION_REG<6>
INTF ..... INTCON<1>
IRP ..... STATUS<7>
OBF ..... TRISE<6>
OERR ..... RCSTA<1>
P ..... SSPSTAT<4>
PCFG2:PCFG0 ..... ADCON1<2:0>
$\overline{\text{PD}}$ ..... STATUS<3>
PEIE ..... INTCON<6>
$\overline{\text{POR}}$ ..... PCON<1>
PS2:PS0 ..... OPTION_REG<2:0>
PSA ..... OPTION_REG<3>
PSPIE ..... PIE1<7>
PSPIF ..... PIR1<7>
PSPMODE ..... TRISE<4>
R/$\overline{\text{W}}$ ..... SSPSTAT<2>
RBIE ..... INTCON<3>
RBIF ..... INTCON<0>
$\overline{\text{RBPU}}$ ..... OPTION_REG<7>
RCIE ..... PIE1<5>
RCIF ..... PIR1<5>
RP1:RP0 ..... STATUS<6:5>
RX9 ..... RCSTA<6>
RX9D ..... RCSTA<0>
S ..... SSPSTAT<3>
SMP ..... SSPSTAT<7>
SPEN ..... RCSTA<7>
SREN ..... RCSTA<5>
SSPEN ..... SSPCON<5>
SSPIE ..... PIE1<3>
SSPIF ..... PIR1<3>
SSPM3:SSPM0 ..... SSPCON<3:0>
SSPOV ..... SSPCON<6>
SYNC ..... TXSTA<4>
T0CS ..... OPTION_REG<5>
T0IE ..... INTCON<5>
T0IF ..... INTCON<2>
T0SE ..... OPTION_REG<4>
T1CKPS1:T1CKPS0 ..... T1CON<5:4>
T1OSCEN ..... T1CON<3>
$\overline{\text{T1SYNC}}$ ..... T1CON<2>
T2CKPS1:T2CKPS0 ..... T2CON<1:0>
TMR1CS ..... T1CON<1>
TMR1IE ..... PIE1<0>
TMR1IF ..... PIR1<0>
TMR1ON ..... T1CON<0>
TMR2IE ..... PIE1<1>
TMR2IF ..... PIR1<1>
TMR2ON ..... T2CON<2>
$\overline{\text{TO}}$ ..... STATUS<4>
TOUTPS3:TOUTPS0 ..... T2CON<6:3>
TRMT ..... TXSTA<1>
TX9 ..... TXSTA<6>
TX9D ..... TXSTA<0>
TXEN ..... TXSTA<5>
TXIE ..... PIE1<4>
TXIF ..... PIR1<4>
UA ..... SSPSTAT<1>
WCOL ..... SSPCON<7>
Z ..... STATUS<2>

 © 1999 Microchip Technology Inc.

ON-LINE SUPPORT

Microchip provides on-line support on the Microchip World Wide Web (WWW) site.

The web site is used by Microchip as a means to make files and information easily available to customers. To view the site, the user must have access to the Internet and a web browser, such as Netscape or Microsoft Explorer. Files are also available for FTP download from our FTP site.

Connecting to the Microchip Internet Web Site

The Microchip web site is available by using your favorite Internet browser to attach to:

www.microchip.com

The file transfer site is available by using an FTP service to connect to:

ftp://ftp.microchip.com

The web site and file transfer site provide a variety of services. Users may download files for the latest Development Tools, Data Sheets, Application Notes, User's Guides, Articles and Sample Programs. A variety of Microchip specific business information is also available, including listings of Microchip sales offices, distributors and factory representatives. Other data available for consideration is:

- Latest Microchip Press Releases
- Technical Support Section with Frequently Asked Questions
- Design Tips
- Device Errata
- Job Postings
- Microchip Consultant Program Member Listing
- Links to other useful web sites related to Microchip Products
- Conferences for products, Development Systems, technical information and more
- Listing of seminars and events

Systems Information and Upgrade Hot Line

The Systems Information and Upgrade Line provides system users a listing of the latest versions of all of Microchip's development systems software products. Plus, this line provides information on how customers can receive any currently available upgrade kits.The Hot Line Numbers are:

1-800-755-2345 for U.S. and most of Canada, and

1-602-786-7302 for the rest of the world.

981103

Trademarks: The Microchip name, logo, PIC, PICmicro, PICSTART, PICMASTER and PRO MATE are registered trademarks of Microchip Technology Incorporated in the U.S.A. and other countries. *Flex*ROM, MPLAB and *fuzzy*-LAB are trademarks and SQTP is a service mark of Microchip in the U.S.A.

All other trademarks mentioned herein are the property of their respective companies.

READER RESPONSE

It is our intention to provide you with the best documentation possible to ensure successful use of your Microchip product. If you wish to provide your comments on organization, clarity, subject matter, and ways in which our documentation can better serve you, please FAX your comments to the Technical Publications Manager at (602) 786-7578.

Please list the following information, and use this outline to provide us with your comments about this Data Sheet.

To: Technical Publications Manager Total Pages Sent

RE: Reader Response

From: Name _____

Company _____

Address _____

City / State / ZIP / Country _____

Telephone: (_____) _____ - _____ FAX: (_____) _____ - _____

Application (optional):

Would you like a reply? ___Y ___N

Device: **PIC16C77X** Literature Number: **DS30275A**

Questions:

1. What are the best features of this document?

_____

_____

2. How does this document meet your hardware and software development needs?

_____

_____

3. Do you find the organization of this data sheet easy to follow? If not, why?

_____

_____

4. What additions to the data sheet do you think would enhance the structure and subject?

_____

_____

5. What deletions from the data sheet could be made without affecting the overall usefulness?

_____

_____

6. Is there any incorrect or misleading information (what and where)?

_____

_____

7. How would you improve this document?

_____

_____

8. How would you improve our software, systems, and silicon products?

_____

_____

© 1998 Microchip Technology Inc.

PIC16C77X PRODUCT IDENTIFICATION SYSTEM

To order or obtain information, e.g., on pricing or delivery, refer to the factory or the listed sales office.

PART NO.	-XX	X	/XX	XXX
Device	Frequency Range	Temperature Range	Package	Pattern

Device	PIC16C77X(1), PIC16C77XT(2);VDD range 4.0V to 5.5V PIC16LC77X(1), PIC16LC77XT(2);VDD range 2.5V to 5.5V			
Frequency Range	04	= 4 MHz		
	20	= 20 MHz		
Temperature Range	b(3)	= 0°C to 70°C	(Commercial)	
	I	= -40°C to +85°C	(Industrial)	
Package	JW	=	Windowed CERDIP/Ceramic	
	PQ	=	MQFP (Metric PQFP)	
	PT	=	TQFP (Thin Quad Flatpack)	
	SO	=	SOIC	
	SP	=	Skinny plastic dip	
	P	=	PDIP	
	L	=	PLCC	
	SS	=	SSOP	
Pattern	QTP, SQTP, Code or Special Requirements (blank otherwise)			

Examples:

g) PIC16C774 -04/P 301 = Commercial temp., PDIP package, 4 MHz, normal VDD limits, QTP pattern #301.

h) PIC16LC773 - 04I/SO = Industrial temp., SOIC package, 200 kHz, Extended VDD limits.

i) PIC16C774 - 20I/P = Industrial temp., PDIP package, 20MHz, normal VDD limits.

Note 1: C = CMOS
LC = Low Power CMOS
T = in tape and reel - SOIC, SSOP, PLCC, MQFP, TQFP packages only.
2: b = blank

* JW Devices are UV erasable and can be programmed to any device configuration. JW Devices meet the electrical requirement of each oscillator type (including LC devices).

Sales and Support

Data Sheets
Products supported by a preliminary Data Sheet may have an errata sheet describing minor operational differences and recommended workarounds. To determine if an errata sheet exists for a particular device, please contact one of the following:
1. Your local Microchip sales office
2. The Microchip Corporate Literature Center U.S. FAX: (602) 786-7277
3. The Microchip Worldwide Site (www.microchip.com)

Please specify which device, revision of silicon and Data Sheet (include Literature #) you are using.

New Customer Notification System
Register on our web site (www.microchip.com/cn) to receive the most current information on our products.

Note the following details of the code protection feature on PICmicro® MCUs.

- The PICmicro family meets the specifications contained in the Microchip Data Sheet.
- Microchip believes that its family of PICmicro microcontrollers is one of the most secure products of its kind on the market today, when used in the intended manner and under normal conditions.
- There are dishonest and possibly illegal methods used to breach the code protection feature. All of these methods, to our knowledge, require using the PICmicro microcontroller in a manner outside the operating specifications contained in the data sheet. The person doing so may be engaged in theft of intellectual property.
- Microchip is willing to work with the customer who is concerned about the integrity of their code.
- Neither Microchip nor any other semiconductor manufacturer can guarantee the security of their code. Code protection does not mean that we are guaranteeing the product as “unbreakable”.
- Code protection is constantly evolving. We at Microchip are committed to continuously improving the code protection features of our product.

If you have any further questions about this matter, please contact the local sales office nearest to you.

Information contained in this publication regarding device applications and the like is intended through suggestion only and may be superseded by updates. It is your responsibility to ensure that your application meets with your specifications. No representation or warranty is given and no liability is assumed by Microchip Technology Incorporated with respect to the accuracy or use of such information, or infringement of patents or other intellectual property rights arising from such use or otherwise. Use of Microchip’s products as critical components in life support systems is not authorized except with express written approval by Microchip. No licenses are conveyed, implicitly or otherwise, under any intellectual property rights.

Trademarks

The Microchip name and logo, the Microchip logo, FilterLab, KEELOQ, microID, MPLAB, PIC, PICmicro, PICMASTER, PICSTART, PRO MATE, SEEVAL and The Embedded Control Solutions Company are registered trademarks of Microchip Technology Incorporated in the U.S.A. and other countries.

dsPIC, ECONOMONITOR, FanSense, FlexROM, fuzzyLAB, In-Circuit Serial Programming, ICSP, ICEPIC, microPort, Migratable Memory, MPASM, MPLIB, MPLINK, MPSIM, MXDEV, PICC, PICDEM, PICDEM.net, rfPIC, Select Mode and Total Endurance are trademarks of Microchip Technology Incorporated in the U.S.A.

Serialized Quick Turn Programming (SQTP) is a service mark of Microchip Technology Incorporated in the U.S.A.

All other trademarks mentioned herein are property of their respective companies.

© 2002, Microchip Technology Incorporated, Printed in the U.S.A., All Rights Reserved.

Printed on recycled paper.

DNV Certification, Inc. USA
ANSI • RAB QMS ACCREDITED
DNV MSC The Netherlands Accredited by the RvA
DNV
ISO 9001 / QS-9000 REGISTERED FIRM

Microchip received QS-9000 quality system certification for its worldwide headquarters, design and wafer fabrication facilities in Chandler and Tempe, Arizona in July 1999. The Company’s quality system processes and procedures are QS-9000 compliant for its PICmicro® 8-bit MCUs, KEELOQ® code hopping devices, Serial EEPROMs and microperipheral products. In addition, Microchip’s quality system for the design and manufacture of development systems is ISO 9001 certified.

WORLDWIDE SALES AND SERVICE

AMERICAS

Corporate Office
2355 West Chandler Blvd.
Chandler, AZ 85224-6199
Tel: 480-792-7200 Fax: 480-792-7277
Technical Support: 480-792-7627
Web Address: http://www.microchip.com

Rocky Mountain
2355 West Chandler Blvd.
Chandler, AZ 85224-6199
Tel: 480-792-7966 Fax: 480-792-7456

Atlanta
500 Sugar Mill Road, Suite 200B
Atlanta, GA 30350
Tel: 770-640-0034 Fax: 770-640-0307

Boston
2 Lan Drive, Suite 120
Westford, MA 01886
Tel: 978-692-3848 Fax: 978-692-3821

Chicago
333 Pierce Road, Suite 180
Itasca, IL 60143
Tel: 630-285-0071 Fax: 630-285-0075

Dallas
4570 Westgrove Drive, Suite 160
Addison, TX 75001
Tel: 972-818-7423 Fax: 972-818-2924

Detroit
Tri-Atria Office Building
32255 Northwestern Highway, Suite 190
Farmington Hills, MI 48334
Tel: 248-538-2250 Fax: 248-538-2260

Kokomo
2767 S. Albright Road
Kokomo, Indiana 46902
Tel: 765-864-8360 Fax: 765-864-8387

Los Angeles
18201 Von Karman, Suite 1090
Irvine, CA 92612
Tel: 949-263-1888 Fax: 949-263-1338

New York
150 Motor Parkway, Suite 202
Hauppauge, NY 11788
Tel: 631-273-5305 Fax: 631-273-5335

San Jose
Microchip Technology Inc.
2107 North First Street, Suite 590
San Jose, CA 95131
Tel: 408-436-7950 Fax: 408-436-7955

Toronto
6285 Northam Drive, Suite 108
Mississauga, Ontario L4V 1X5, Canada
Tel: 905-673-0699 Fax: 905-673-6509

ASIA/PACIFIC

Australia
Microchip Technology Australia Pty Ltd
Suite 22, 41 Rawson Street
Epping 2121, NSW
Australia
Tel: 61-2-9868-6733 Fax: 61-2-9868-6755

China - Beijing
Microchip Technology Consulting (Shanghai) Co., Ltd., Beijing Liaison Office
Unit 915
Bei Hai Wan Tai Bldg.
No. 6 Chaoyangmen Beidajie
Beijing, 100027, No. China
Tel: 86-10-85282100 Fax: 86-10-85282104

China - Chengdu
Microchip Technology Consulting (Shanghai) Co., Ltd., Chengdu Liaison Office
Rm. 2401, 24th Floor,
Ming Xing Financial Tower
No. 88 TIDU Street
Chengdu 610016, China
Tel: 86-28-6766200 Fax: 86-28-6766599

China - Fuzhou
Microchip Technology Consulting (Shanghai) Co., Ltd., Fuzhou Liaison Office
Unit 28F, World Trade Plaza
No. 71 Wusi Road
Fuzhou 350001, China
Tel: 86-591-7503506 Fax: 86-591-7503521

China - Shanghai
Microchip Technology Consulting (Shanghai) Co., Ltd.
Room 701, Bldg. B
Far East International Plaza
No. 317 Xian Xia Road
Shanghai, 200051
Tel: 86-21-6275-5700 Fax: 86-21-6275-5060

China - Shenzhen
Microchip Technology Consulting (Shanghai) Co., Ltd., Shenzhen Liaison Office
Rm. 1315, 13/F, Shenzhen Kerry Centre,
Renminnan Lu
Shenzhen 518001, China
Tel: 86-755-2350361 Fax: 86-755-2366086

Hong Kong
Microchip Technology Hongkong Ltd.
Unit 901-6, Tower 2, Metroplaza
223 Hing Fong Road
Kwai Fong, N.T., Hong Kong
Tel: 852-2401-1200 Fax: 852-2401-3431

India
Microchip Technology Inc.
India Liaison Office
Divyasree Chambers
1 Floor, Wing A (A3/A4)
No. 11, O'Shaugnessey Road
Bangalore, 560 025, India
Tel: 91-80-2290061 Fax: 91-80-2290062

Japan
Microchip Technology Japan K.K.
Benex S-1 6F
3-18-20, Shinyokohama
Kohoku-Ku, Yokohama-shi
Kanagawa, 222-0033, Japan
Tel: 81-45-471- 6166 Fax: 81-45-471-6122

Korea
Microchip Technology Korea
168-1, Youngbo Bldg. 3 Floor
Samsung-Dong, Kangnam-Ku
Seoul, Korea 135-882
Tel: 82-2-554-7200 Fax: 82-2-558-5934

Singapore
Microchip Technology Singapore Pte Ltd.
200 Middle Road
#07-02 Prime Centre
Singapore, 188980
Tel: 65-334-8870 Fax: 65-334-8850

Taiwan
Microchip Technology Taiwan
11F-3, No. 207
Tung Hua North Road
Taipei, 105, Taiwan
Tel: 886-2-2717-7175 Fax: 886-2-2545-0139

EUROPE

Denmark
Microchip Technology Nordic ApS
Regus Business Centre
Lautrup hoj 1-3
Ballerup DK-2750 Denmark
Tel: 45 4420 9895 Fax: 45 4420 9910

France
Microchip Technology SARL
Parc d'Activite du Moulin de Massy
43 Rue du Saule Trapu
Batiment A - ler Etage
91300 Massy, France
Tel: 33-1-69-53-63-20 Fax: 33-1-69-30-90-79

Germany
Microchip Technology GmbH
Gustav-Heinemann Ring 125
D-81739 Munich, Germany
Tel: 49-89-627-144 0 Fax: 49-89-627-144-44

Italy
Microchip Technology SRL
Centro Direzionale Colleoni
Palazzo Taurus 1 V. Le Colleoni 1
20041 Agrate Brianza
Milan, Italy
Tel: 39-039-65791-1 Fax: 39-039-6899883

United Kingdom
Arizona Microchip Technology Ltd.
505 Eskdale Road
Winnersh Triangle
Wokingham
Berkshire, England RG41 5TU
Tel: 44 118 921 5869 Fax: 44-118 921-5820

01/18/02

© 2002 Microchip Technology Inc.

Mouser Electronics

Authorized Distributor

Click to View Pricing, Inventory, Delivery & Lifecycle Information:

Microchip:
PIC16LC774-I/L PIC16LC774-I/P PIC16C774-E/P PIC16LC774-I/PQ PIC16LC774-I/PT PIC16C773T/SS PIC16C774T-I/PT PIC16LC773/SP PIC16LC773/SS PIC16C773/SP PIC16C774-I/L PIC16C774-I/P PIC16LC773-I/SP PIC16LC773-I/SS PIC16LC773-I/SO PIC16C773-E/SP PIC16C773-E/SO PIC16C773-E/SS PIC16C774-E/PT PIC16LC774/P PIC16LC774T/PQ PIC16LC773T-I/SO PIC16LC774T-I/PQ PIC16C773T-I/SO PIC16C773T-I/SS PIC16C773-I/SP PIC16C773-I/SS PIC16C773-I/SO PIC16LC774T/L PIC16LC773/SO PIC16C774/L PIC16C773/SO PIC16C773/SS PIC16LC774/PT PIC16LC774/PQ PIC16C774-I/PQ PIC16C774-I/PT PIC16C774/PQ PIC16C774/PT