THIS COPY IS PROVIDED ON A RESTRICTED BASIS AND IS NOT TO BE USED IN ANY WAY DETRIMENTAL TO THE INTERESTS OF PANDUIT CORP.

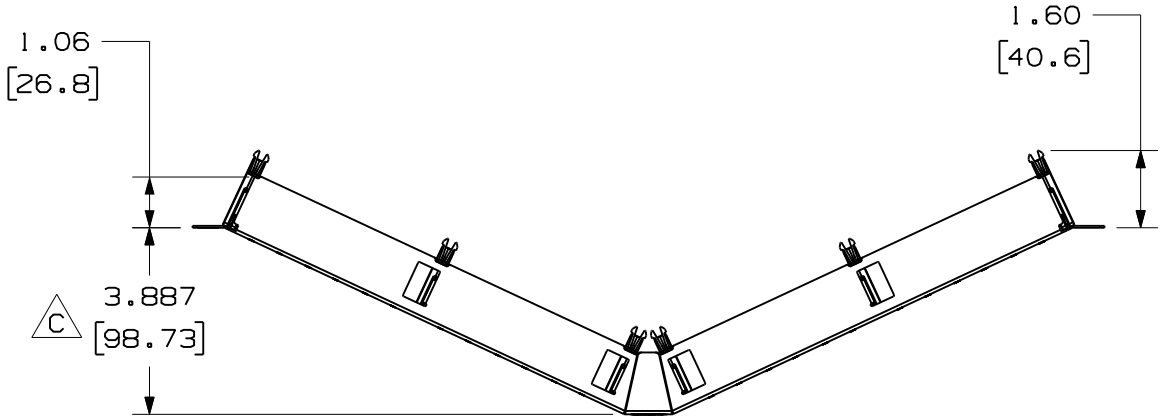

PANDUIT PART NO.	WEIGHT (APPOX.)
QAPP48HDBL	0.65 lb (294.8 g)

NOTES:
1. SEE CURRENT CATALOG FOR VARIOUS APPLICATIONS.
2. THE PATCH PANEL IS DESIGNED FOR MOUNTING TO 19" UNIVERSAL RACKS.
3. DIMENSIONS IN BRACKETS ARE IN METRIC.
4. PART INCLUDES:
   - 1- METAL STAMPING WITH SLIDE GUIDES
   - 1- SCREW KIT (INCLUDES FOUR #12-24 SCREWS)
   - 1- SCREW KIT (INCLUDES FOUR M6 SCREWS)

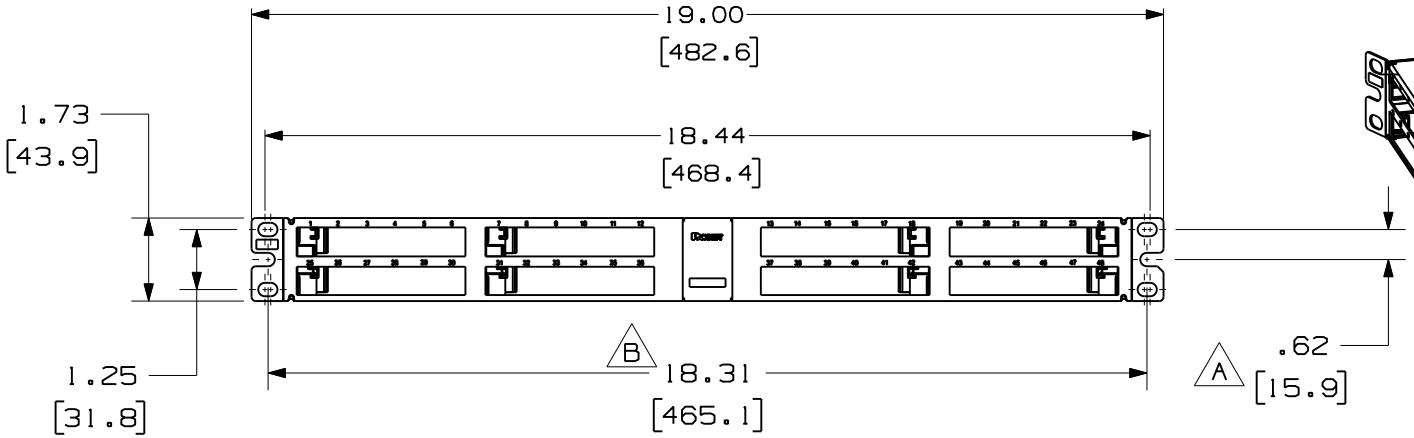

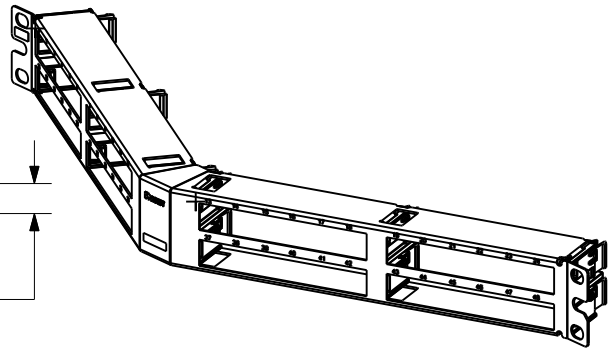

D

MODEL FILENAME	M02582BS_48_PORT_1RU_ANGLED_PANEL_ASSY_05
DRAWING FILENAME	M02582BS_DC20_05A.PRT
SIZE	A
TITLE	QUICKNET 48 PORT ANGLED PATCH PANEL CUSTOMER DRAWING

PANDUIT™ CORP.
TINLEY PARK, ILL 60477

THIRD ANGLE PROJECTION

ALL DIMENSIONS ARE GIVEN IN INCHES, UNLESS OTHERWISE SPECIFIED.
DIMENSIONAL TOLERANCES ARE:
(.X) ±.03 (.XXX) ±.005
(.XX) ±.01 ANGLES ± 1°

DRAWN BY: MDJr
DATE: 9-01-06
CHK'D: WFMI

MATERIAL:
PANEL: CRS
GUIDES: ABS

I.I. NUMBER:
PRODUCT SPEC:
WORK INSTRUCTION:
SCALE: .25 TO 1
PART NO.: QAPP48HDBL
DRAWING NO.: 02582-20

REV	DATE	BY	CHK	DESCRIPTION	ECN -	CUST	SUP	OTH
1	6-23-07	BJN	WFMI	D. UPDATED MODEL TO REV 05 C. ADDED 3.887[98.73] DIMENSION B. ADDED 18.31[465.1] DIMENSION A. ADDED .62[15.9] DIMENSION	02582-20	TRW		
R	11-10-06	MDJr	WFMI	RELEASED TO PRODUCTION	02582-20	TRW		