REVISION N

DO NOT SCALE FROM THIS PRINT

ASO ONLY (APPLICATION SPECIFIC ORDER)

TABLE 1

EDGE MOUNT THICKNESS	"A"	"B"	"C"	BODY	CONTACT
-EM2	.130[3.30]	.0670[1.702]	.058[1.47]	QTH-30-01-D-EM2-XX	T-1S42-01-X
*-EM3	.160[4.06]	.0980[2.489]	.088[2.24]	QTH-30-01-D-EM3-XX	T-1S42-02-X

TABLE 2

No OF PAIRS	MAX BOW	GND PLANE COPLANARITY
-020, -040, -060	.004 [.10]	.004 [.10]
-080, -100	.006 [.15]	.005 [.13]

* = SEE NOTE 11

QTH-XXX-01-X-D-DP-EMX

No OF POSITIONS
-020, -040, -060, **-080, **-100 (PER ROW)
**SEE NOTE 12

LEAD STYLE
-01: .1680[4.267]

PLATING SPECIFICATION
-F: FLASH SELECTIVE GOLD [SEE NOTE 7] (USE T-1S42-XX-F & T-1G1-01-F)
-L: LIGHT SELECTIVE GOLD (USE T-1S42-XX-L & T-1G1-01-L)
-H: HEAVY GOLD (USE T-1S42-XX-H & T-1G1-01-G)

DIFFERENTIAL PAIR

ROW SPECIFICATION
-D: DOUBLE [SEE TABLE 1] (USE QTH-30-01-D-EMX-XX)

No OF BANKS

EDGE MOUNT THICKNESS
-EM2: .064[1.63] +/-.004 PCB (USE QTH-30-01-D-EM2-XX & T-1S42-01-X)
-EM3: (USE QTH-30-01-D-EM3-XX & T-1S42-02-X)
SEE NOTE 11

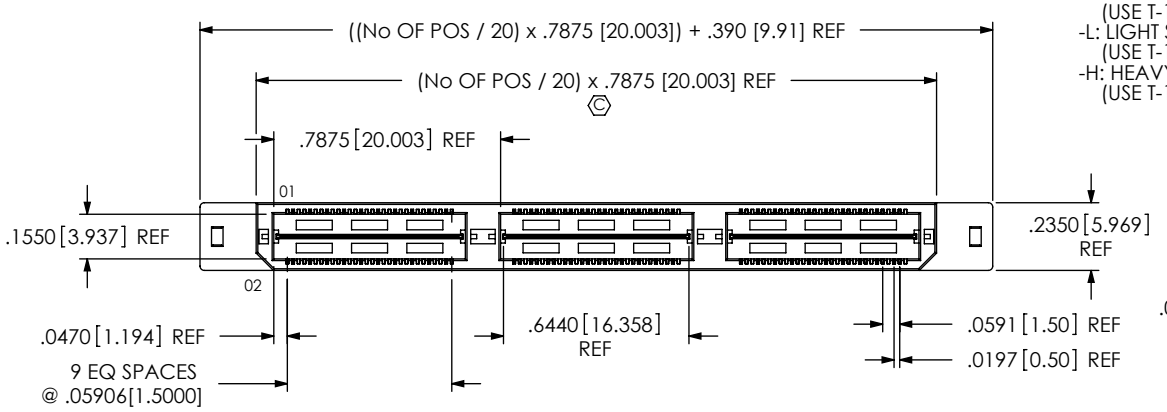

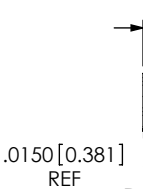

DETAIL 'A'
SCALE 2 : 1

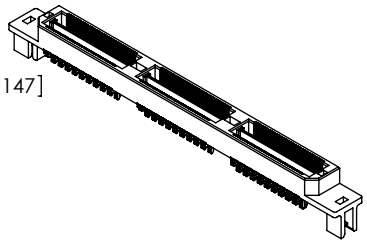

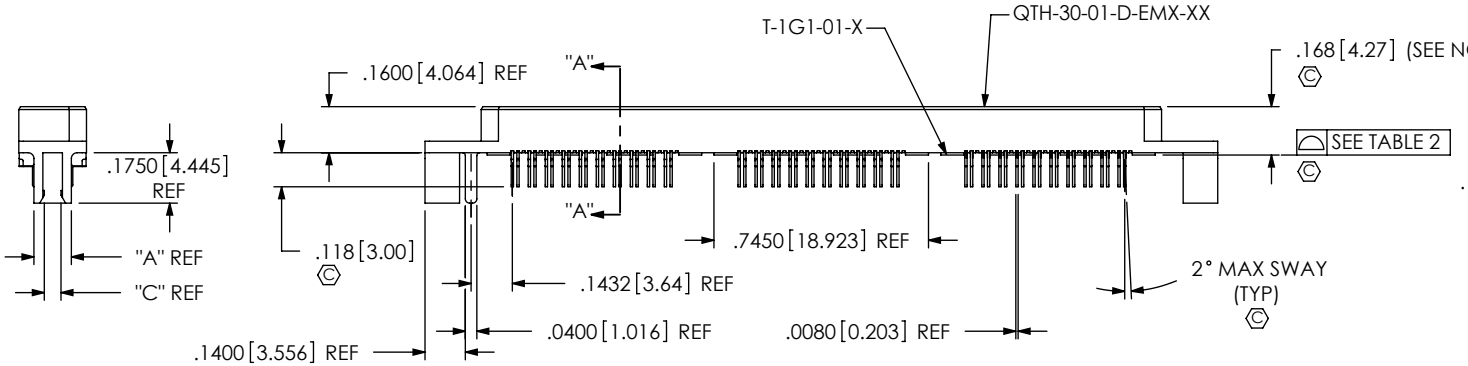

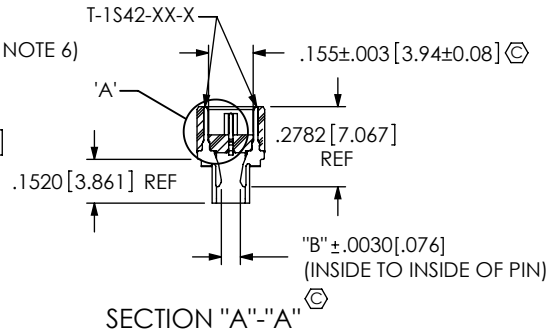

SECTION "A"-"A"

NOTES:

1. REPRESENTS A CRITICAL DIMENSION.
2. BURR ALLOWANCE: .0015[.038] MAX.
3. MINIMUM PUSHOUT FORCE: 5 OZ.
4. MINIMUM GROUND PLANE RETENTION: 1 LB.
5. PARTS TO BE MOLDED TO POSITION.
6. C5 MAXIMUM VARIANCE .002[.05].
7. -L PLATING CAN BE SUBSTITUTED FOR -F PLATING.
8. NOTE DELETED
9. BOARD THICKNESS TO BE MEASURED FROM SOLDER PAD TO SOLDER PAD.
10. SEE www.samtec.com/processing/edgemt_tectalk/index.htm FOR PROCESSING EDGE MOUNT PARTS TO BOARD.
11. EM3 IS NOT A STANDARD OFFERING; AVAILABLE AS AN ASP ONLY. PLEASE CONTACT SAMTEC INTERCONNECT PROCESSING GROUP WITH ORDER INQUIRIES
12. FOR NEW APPLICATIONS REQUIRING THESE POSITIONS, PLEASE CONTACT SAMTEC INTERCONNECT PROCESSING GROUP.

UNLESS OTHERWISE SPECIFIED, DIMENSIONS ARE IN INCHES.
TOLERANCES ARE:
DECIMALS .XX: ±.01[.3] .XXX: ±.005[.13] .XXXX: ±.0020[.051]
ANGLES 2°

PROPRIETARY NOTE
THIS DOCUMENT CONTAINS INFORMATION CONFIDENTIAL AND PROPRIETARY TO SAMTEC, INC. AND SHALL NOT BE REPRODUCED OR TRANSFERRED TO OTHER DOCUMENTS OR DISCLOSED TO OTHERS OR USED FOR ANY PURPOSE OTHER THAN THAT WHICH IT WAS OBTAINED WITHOUT THE EXPRESSED WRITTEN CONSENT OF SAMTEC, INC.

samtec
520 PARK EAST BLVD, NEW ALBANY, IN 47150
PHONE: 812-944-6733 FAX: 812-948-5047
e-Mail: info@SAMTEC.com code: 55322

MATERIAL: DO NOT SCALE DRAWING SHEET SCALE: 1.5:1

INSULATOR: LCP, COLOR: BLACK
TERMINAL & GROUND PLANE: PHOS BRONZE

DESCRIPTION: .5mm HS DIFF PAIR EDGE MOUNT TERMINAL ASSEMBLY

DWG. NO. QTH-XXX-01-X-D-DP-EMX

BY: DEAN P 12-12-2001 SHEET 1 OF 1

F:\DWG\MISC\MKTG\QTH-XXX-01-X-D-DP-EMX-MKT.SLDDRW