| REV. | DESCRIPTION | DATE |
|---|---|---|
| A | NEW DRAWING | 6/4/2007 |
| B | added shell cut | 1/30/2008 |

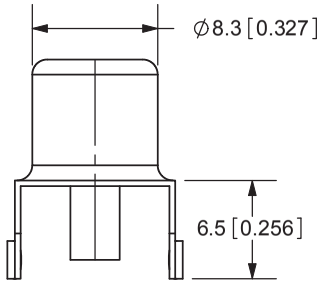


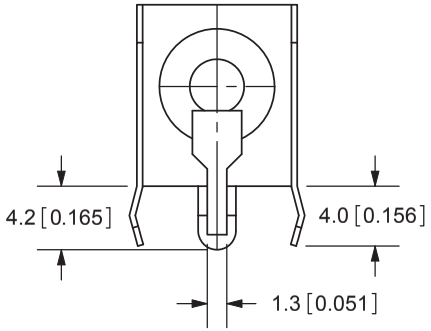


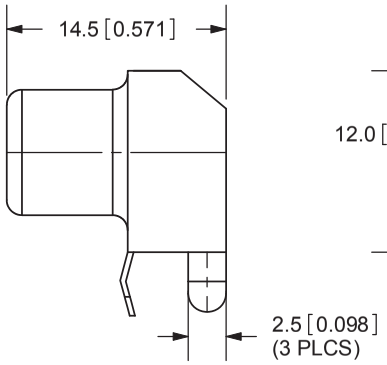


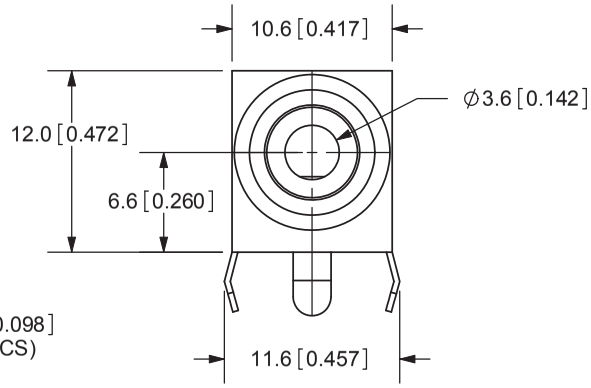


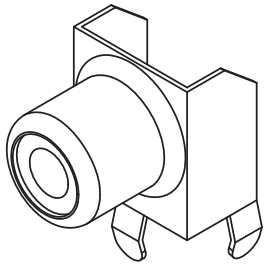

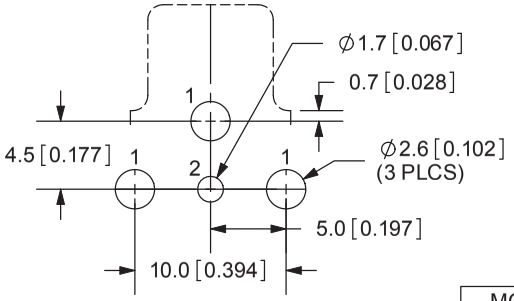


PCB LAYOUT
TOP VIEW

| MODEL NO. | RCJ-01X |
|---|---|
| SCHEMATIC | 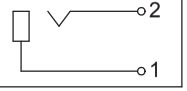 |



| COLOR INDEX | |
|---|---|
| PART NO. | COLOR |
| RCJ-011 | Black |
| RCJ-012 | Red |
| RCJ-013 | White |
| RCJ-014 | Yellow |
| RCJ-015 | Blue |
| RCJ-016 | Green |
| RCJ-017 | Orange |

TOLERANCE:
±0.3mm UNLESS OTHERWISE SPECIFIED

RoHS

CUI INC


20050 SW 112th Ave.
Tualatin, OR 97062
Phone: 503-612-2300
800-275-4899
Fax: 503-612-2383
Website: www.cui.com


SPECIFICATIONS:
CONTACT RESISTANCE: 30m OHMS MAX
INSULATION RESISTANCE: 50M OHMS MIN: 500V DC
VOLTAGE WITHSTAND: 500V AC R.M.S. FOR 1 MINUTE
LIFE: 5,000 CYCLES
OPERATING TEMP: -20° ~ +85°C

| | MATERIAL | PLATING |
|---|---|---|
| BODY | Steel | Tin |
| TERMINAL | Brass | Tin |
| INSULATOR | Bakelite | see color index |
| INSULATOR | PBT | see color index |

| | | |
|---|---|---|
| TITLE: RCA Jack, Metal, Right Angle, PCB Mount | | REV: B |
| PART NO. RCJ-01X | | UNITS: MM [INCHES] |
| DRAWN BY: ZRJ | APPROVED BY: | SCALE: 2:1 |

PC FILE NAME: RCJ-01X

COPYRIGHT 2008 BY CUI INC.

For more information, please visit the product page.