# Bluetooth 2.0/EDR Serial Adapter

## Product Specification

**Model# : RN240 (RS-232) , RN422 (RS-422)**

**Description:**

**Bluetooth v2.0 Class1 Serial Adapter**

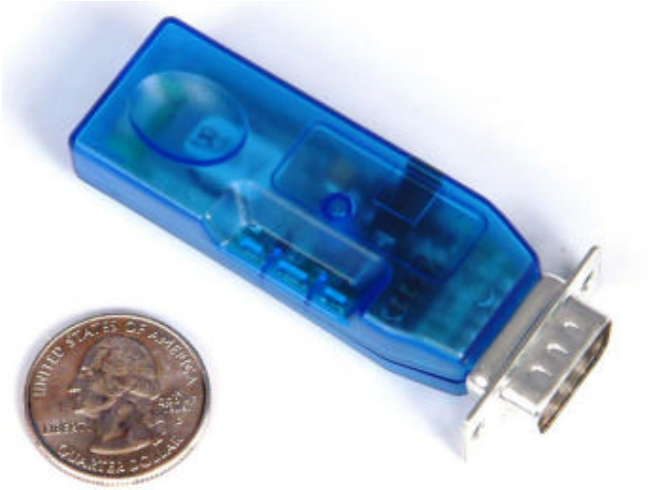

**Overview:**

- CSR BlueCore04 Chip/8Mb flash
- Bluetooth v2.0 Compliant.

(also compatible with 1.2/1.1)

- Secure and robust link, FHSS, 128 bit encryption, error correction and guaranteed packet delivery.
- High speed UART-RS232 interface.
- UART baudrates from 1200 to 234K.
- Low power: <10 ma discoverable,

40ma connected, 5ma SNIFF )

- Supports SPP, and DUN profiles.
- Built in stack/applications, auto-discovery, auto-connect, and instant cable modes.
- Class1, up to 15dBm (100meters)
- 3 Status LEDS.
- 4 configuration DIP switches
- Internal jumpers for DCE/DTE swap.
- Dimension: 24 mm w x 72 mm l x 15 mm h.

www.rovingnetworks.com

431 Monterey Ave, Suite 5
Los Gatos, CA 95030 USA
(408) 395-6539

Downloaded from Elcodis.com electronic components distributor

# 1. Hardware & Technical Information

## 1.1 Port Pin definition

| Pin No. | RN-240M | RN-240F | RN-422M |
|---|---|---|---|
| 1 | NC | NC | NC |
| 2 | RXD | TXD | NC |
| 3 | TXD | RXD | RXD- |
| 4 | NC | NC | TXD+ |
| 5 | Ground | Ground | GND |
| 6 | NC | NC | 5VDC |
| 7 | RTS | CTS | RXD+ |
| 8 | CTS | RTS | TXD- |
| 9 | 4-11VDC | 4-11VDC | NC |

## 1.2 Block Diagram

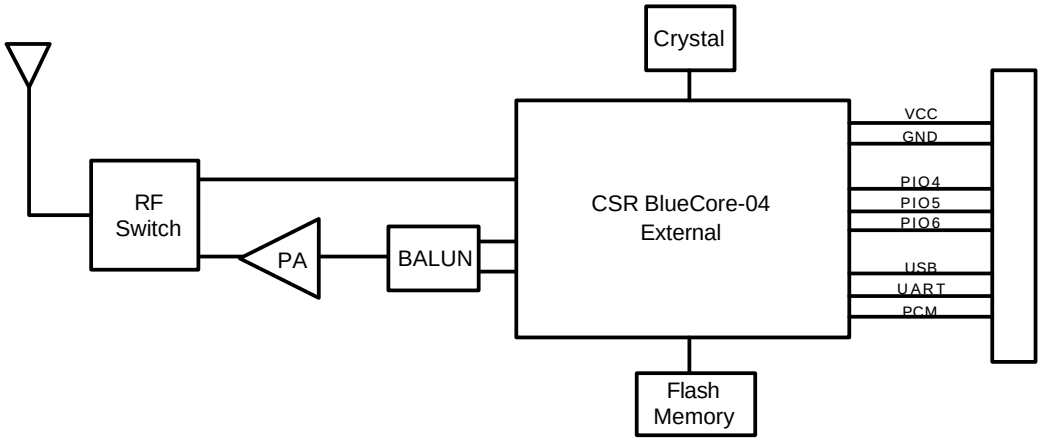


Fig 1.3.1 RN240, RN422 Class1 Block Diagram


431 Monterey Ave, Suite 5
Los Gatos, CA 95030 USA
(408) 395-6539
Downloaded from Elcodis.com electronic components distributor

## 1.3 Electrical Characteristics

| | Min | Typ. | Max. | Unit |
|---|---|---|---|---|
| Supply Voltage (DC) | 4.0 | 5.0 | 11.0 | V |
| RX Supply Current | - | 35 | 60 | mA |
| TX Supply Current | - | 65 | 100 | mA |
| **Average power consumption** | | | | |
| Standby/Idle (default settings) | - | 25 | - | mA |
| Standby/Idle (lowest power) | 2.5 | 4 | - | mA |
| Connected(normal mode) | | 40 | | mA |
| Connected( low power Sniff) | | 15 | | mA |

## ¦ Operating and Environmental Conditions

| | |
|---|---|
| Operating Temperature Range | -40 $^{o}$C ~ 85 $^{o}$C |
| Storage Temperature Range | -40 $^{o}$C ~ 85 $^{o}$C |
| Relative Humidity (Operating) | ≤90% |
| Relative Humidity (Storage) | ≤90% |


431 Monterey Ave, Suite 5
Los Gatos, CA 95030 USA
(408) 395-6539
Downloaded from Elcodis.com electronic components distributor

## 1.4 Radio Characteristics

### RN240, RN422 Class1 BT2.0 Adapter

| | Frequency (GHz) | Min | Typ | Max | BT Spec. | Unit |
|---|---|---|---|---|---|---|
| Sensitivity at 0.1%BER | 2.402 | - | -80 | -86 | $\leq -70$ | dBm |
| | 2.441 | - | -80 | -86 | | dBm |
| | 2.480 | - | -80 | -86 | | dBm |
| RF Transmit Power | 2.402 | 15.0 | 16.0 | | ≤15 | dBm |
| | 2.441 | 15.0 | 16.0 | | | dBm |
| | 2.480 | 15.0 | 16.0 | | | dBm |
| Initial Carrier Frequency Tolerance | 2.402 | - | 5 | 75 | 75 | kHz |
| | 2.441 | - | 5 | 75 | | kHz |
| | 2.480 | - | 5 | 75 | | kHz |
| 20dB bandwidth for modulated carrier | | - | 900 | 1000 | $\leq 1000$ | kHz |
| Drift (Five slots packet) | | - | 15 | - | 40 | kHz |
| Drift Rate | | - | 13 | - | 20 | kHz |
| $\Delta f1_{avg}$ "Maximum Modulation" | 2.402GHz | 140 | 165 | 175 | $140 < \Delta f1_{avg}$ | kHz |
| | 2.441GHz | 140 | 165 | 175 | | kHz |
| | 2.480GHz | 140 | 165 | 175 | | kHz |
| $\Delta f2_{max}$ "Minimum Modulation" | 2.402GHz | 115 | 190 | - | 115 | kHz |
| | 2.441GHz | 115 | 190 | - | | kHz |
| | 2.480GHz | 115 | 190 | - | | kHz |


431 Monterey Ave, Suite 5
Los Gatos, CA 95030 USA
(408) 395-6539
Downloaded from Elcodis.com electronic components distributor