THIS DRAWING IS UNPUBLISHED. RELEASED FOR PUBLICATION ,19 .
© COPYRIGHT 19 BY AMP INCORPORATED. ALL RIGHTS RESERVED.

LOC	DIST
CE	16

REVISIONS

P	LTR	DESCRIPTION	DATE	DWN	APVD
	0	RELEASED PER NPR 99-258	24NOV99	TG	JH

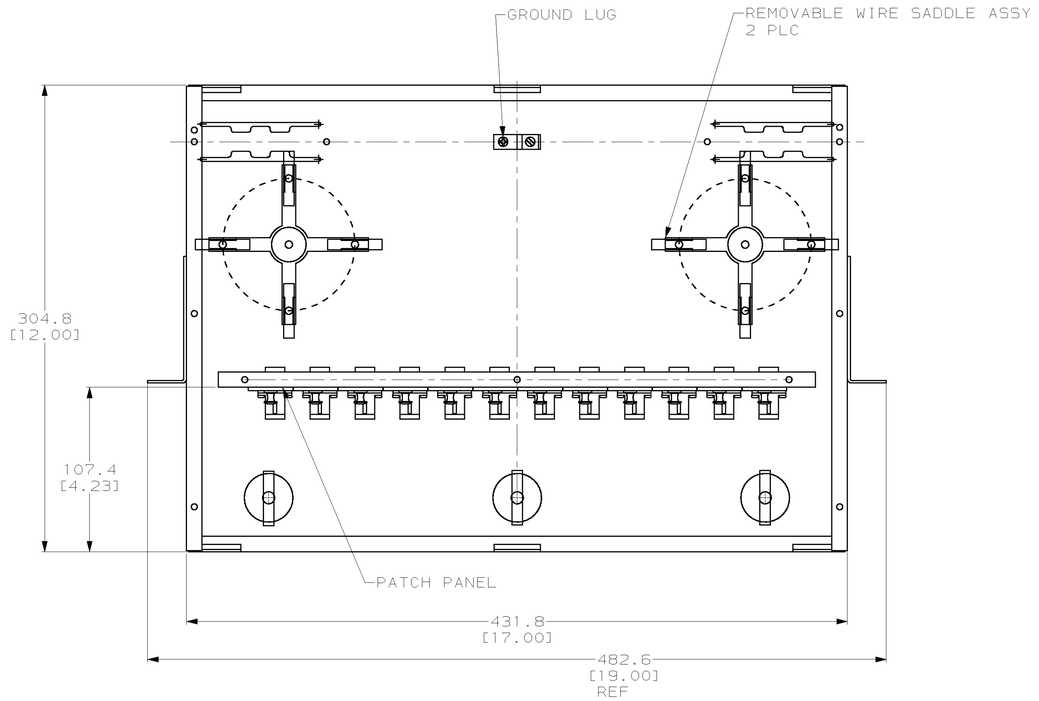

TOP PLATE NOT SHOWN IN THIS VIEW

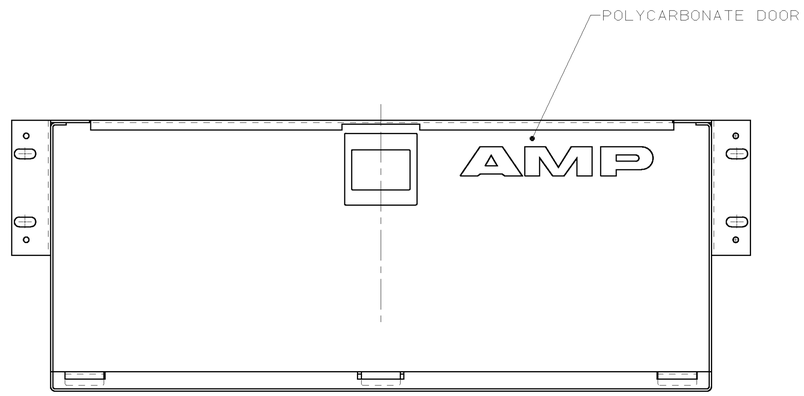

FRONT VIEW WITH DOOR

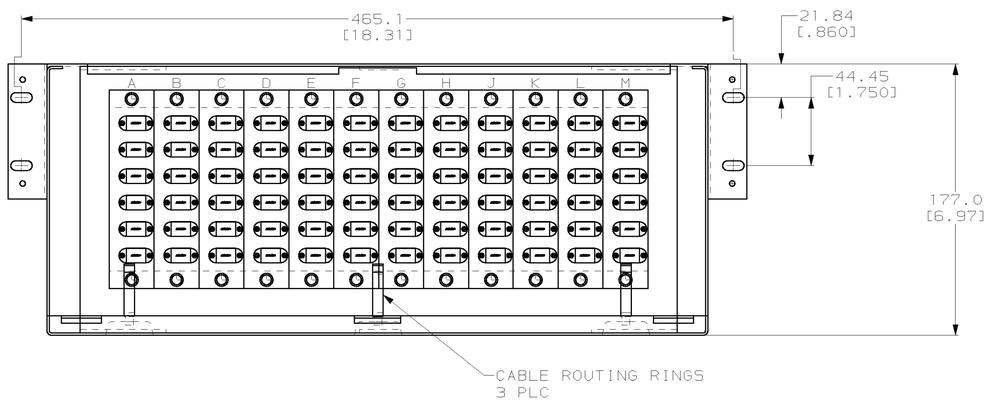

FRONT DOOR NOT SHOWN IN THIS VIEW

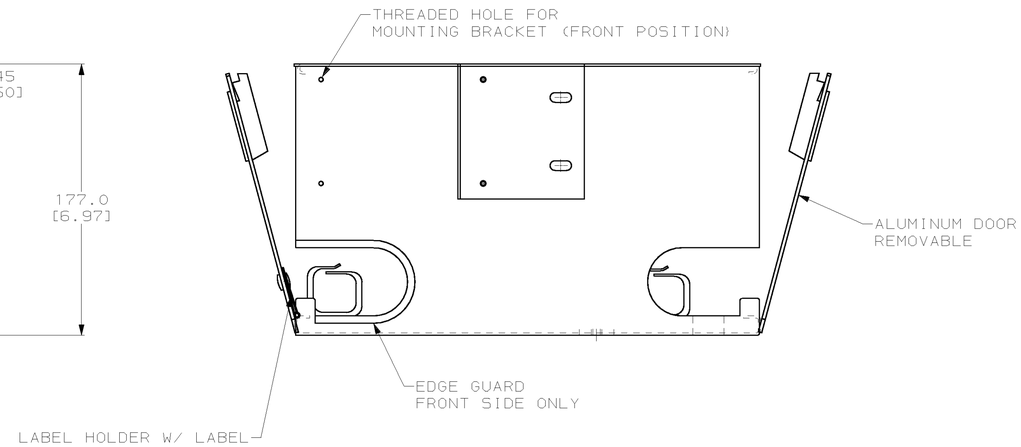

1. THE FOLLOWING LABELS ARE BAGGED AND PLACED IN THE ENCLOSURE
   1 M THRU A ADHESIVE BACKED LABEL
   1 A THRU M ADHESIVE BACKED LABEL (-3 & -4 ONLY)
   2 WARNING LABELS
2. FOUR (4) #12-24UNC-2A SCREWS ARE PROVIDED IN BAG INSIDE THE ENCLOSURE
3. ENCLOSURE IS PROVIDED FOR 19"RACK MOUNTING, BY REPOSITIONING MOUNTING BRACKETS; IT CAN BE MOUNTED INTO A 23"RACK

CONNECTOR TYPE	PART NUMBER
FC-FC, APC	1278799-4
FC-FC, PC	1278799-3
SC-SC SIMPLEX, GREEN, APC	1278799-2
SC-SC SIMPLEX, BLUE, UPC	1278799-1

THIS DRAWING IS A CONTROLLED DOCUMENT.

DIMENSIONS: mm [in]

TOLERANCES UNLESS OTHERWISE SPECIFIED.
0 PLC ±-
1 PLC ±-
2 PLC ±0.8[.030]
3 PLC ±0.25 [.010]
4 PLC ±-
ANGLES ±-

MATERIAL –
FINISH –

DWN T.GREEN 23NOV99
CHK J C HOFFER 23NOV99
APVD J.HIMES 23NOV99
PRODUCT SPEC –
APPLICATION SPEC –
WEIGHT –

AMP Incorporated
Harrisburg, PA 17105-3608

NAME ENCLOSURE ASSY, 72 PORT, SC-SC, FC-FC SINGLEMODE

SIZE	CAGE CODE	DRAWING NO	RESTRICTED TO
A1	00779	C- 1278799	–

CUSTOMER DRAWING SCALE 1:2 SHEET 1 OF 1 REV 0